March 20, 1956 H. H. MOORE 2,739,026

FILE CABINET DRAWER HANDLE

Filed Dec. 19, 1952 2 Sheets-Sheet 1

Fig. 1

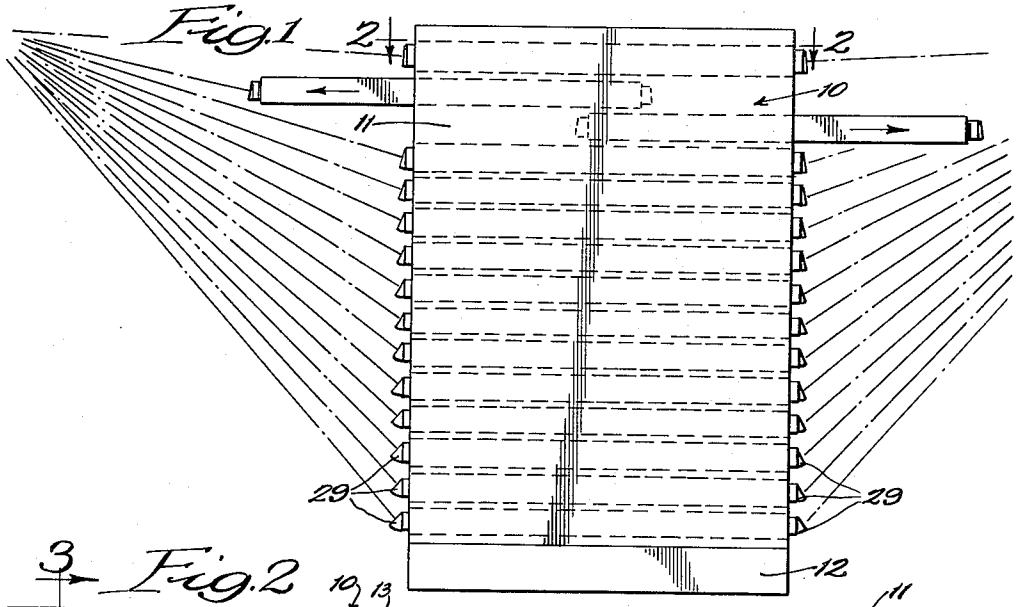

Fig. 2

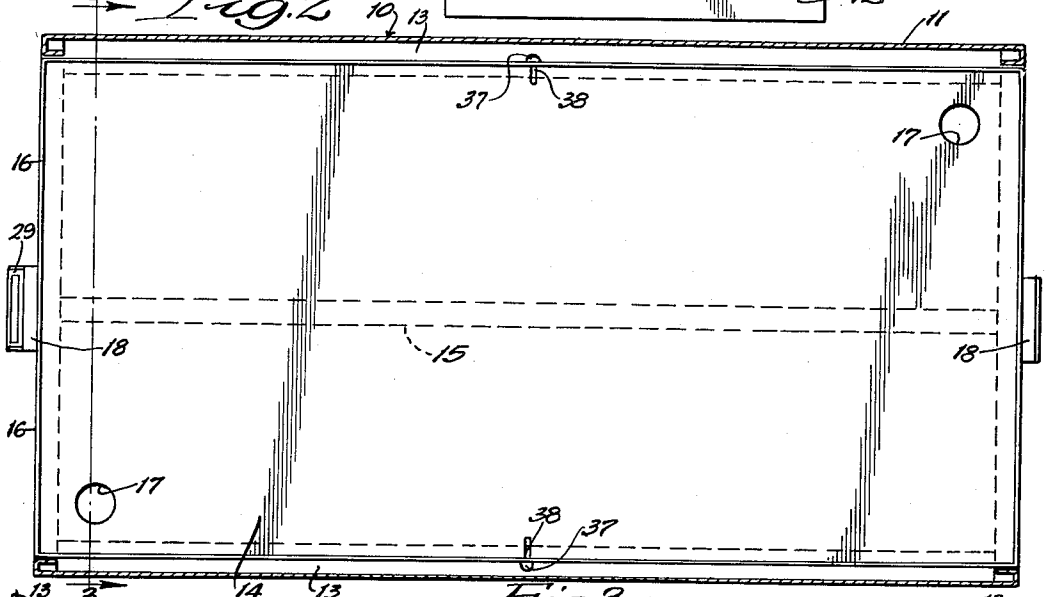

Fig. 3

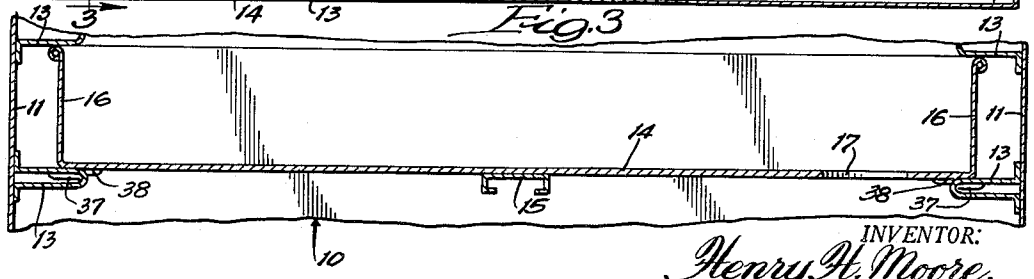

INVENTOR:
Henry H. Moore,
BY
Dawson, Tilton & Graham,
ATTORNEYS.

March 20, 1956 H. H. MOORE 2,739,026

FILE CABINET DRAWER HANDLE

Filed Dec. 19, 1952 2 Sheets-Sheet 2

Fig. 4

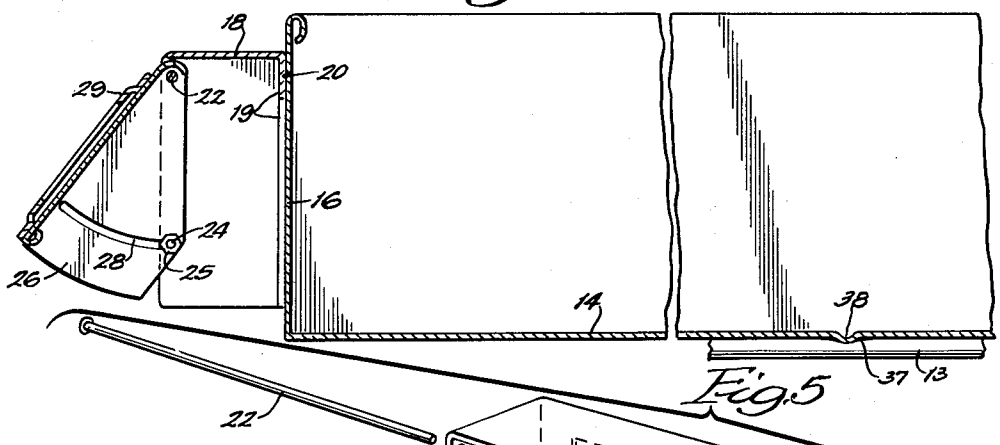

Fig. 5

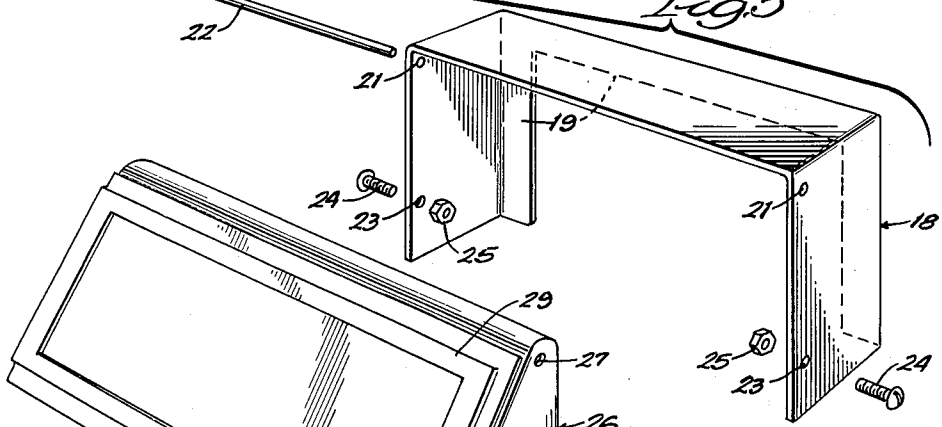

Fig. 6

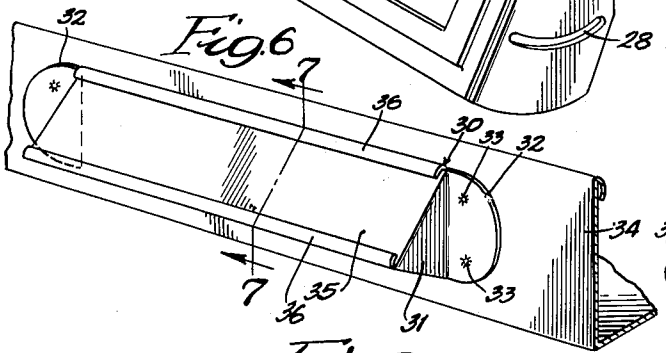

Fig. 7

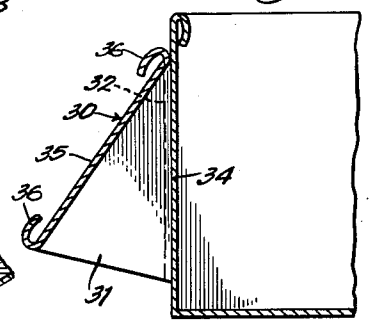

Fig. 8

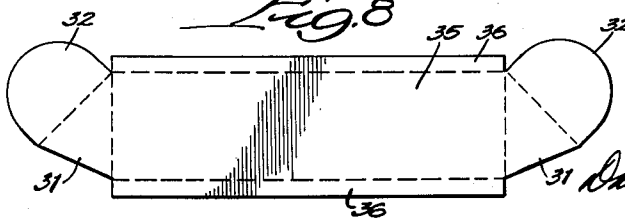

INVENTOR:
Henry H. Moore,
BY
Dawson, Tilton & Graham,
ATTORNEYS.

United States Patent Office 2,739,026 Patented Mar. 20, 1956

2,739,026

FILE CABINET DRAWER HANDLE

Henry H. Moore, Austin, Tex.

Application December 19, 1952, Serial No. 326,921

5 Claims. (Cl. 312—320)

This invention relates to a file cabinet. The invention is particularly useful in connection with drawers which may be withdrawn from either side of the cabinet and from the cabinet entirely and also with cabinet handles equipped with index cards or strips.

In a cabinet having drawers which may be opened from opposite sides, it is important that the drawer have sufficient frictional resistance to prevent it from moving entirely out of the cabinet compartment and thus spilling files on the floor, while at the same time an important purpose is served if the drawer may be drawn outwardly or entirely removed from the compartment. Further, in connection with a cabinet which has a large number of drawers extending from an elevated point down to a point near the floor, it is important that the secretary or other person using the drawer be able to read the index strips or cards on each of the drawers without moving from her chair. If the index cards are supported in a vertical angle on all of the drawers, it is extremely difficult for the secretary to read the cards indexing the various drawers without bending over sharply to read the lower cards. There has long been a need for a cabinet structure in which cards are supported at different angles so that they may be read readily by one sitting in a chair while at the same time enabling people on opposite sides of the cabinet to withdraw drawers from either side. In the handling of forms such as insurance forms, legal forms, ruled office forms and a wide variety of forms and other papers used in business, it is possible to have but one set of forms for several persons seated about the cabinet and any one of the forms may be removed for use by one person on the side of the cabinet where he or she is seated so that the forms may be removed to a desk and then the entire drawer replaced in the cabinet.

An object of the invention is to provide a cabinet structure as described above, satisfying the requirements as to visibility of all the index cards in a cabinet viewed from a single position, while also enabling the user to withdraw a drawer from either side of the cabinet. A further object is to provide in such a structure frictional supports for the drawers so that they will not be pushed out of the compartments in which they are housed through carelessness in the use thereof, while at the same time the drawers may be readily withdrawn for use on a table, desk, etc. Yet another object is to provide in a cabinet structure in which vertical drawers are supported with index or identifying strips thereon, a structure whereby such index cards may be filed at different angles to render them readily visible by one sitting in a chair near the cabinet. A still further object is to provide, in combination with a handle structure, means for supporting said index cards at different angles while at the same time providing a handle for the removal of the drawers. Other specific objects and advantages will appear as the specification proceeds.

The invention is shown, in an illustrative embodiment, by the accompanying drawings, in which—

Figure 1 is a side view in elevation of a cabinet structure embodying my invention; Fig. 2, a plan sectional view, the section being taken as indicated at line 2—2 of Fig. 1; Fig. 3, a sectional detail view, the section being taken as indicated at line 3—3 of Fig. 2; Fig. 4, a broken longitudinal sectional view of a drawer and handle therefor; Fig. 5, a perspective view of a handle and index supporting member forming a part of the handle, the members being shown in separated relation; Fig. 6, a broken perspective view of a modified form of handle and index slip supporting device; Fig. 7, a sectional view, the section being taken as indicated at line 7—7 of Fig. 6; and Fig. 8, a developed view of the handle structure shown in Figs. 6 and 7.

In the illustration given, **10** indicates a cabinet which may be of any suitable construction. The cabinet may be formed of spaced members forming compartments so that the cabinet may be increased in height by adding separate parts. If desired, the cabinet may have a single housing in which are mounted drawers, as illustrated. It will be understood that any suitable cabinet may be employed in connection with the invention.

In the specific illustration given, I provide a housing or casing **11** mounted upon a base **12**, the front and rear sides of the casing being closed and the ends of the casing being open. Inside of the case there are provided spaced supports for a drawer. As seen more clearly in Fig. 3, side brackets or runners **13** may be provided for supporting the sides of a drawer **14** and a central runner **15** may be provided for supporting the central portion of the drawer **14**.

The drawer **14** may be of any suitable construction. In the illustration given, I provide a metal file drawer having sides **16** adapted to receive forms or other documents. To facilitate removal of the documents, the drawer bottom may be provided with an opening **17**. By reason of the friction of the drawer against members **13** and **15**, there is no tendency for the drawer, when pushed, to slide out of the other end of the cabinet. However, the drawer **14** may be readily withdrawn from either end of the cabinet when it is desired to withdraw it, and the drawer and its contents may be removed to a table, desk, or other place for the removed documents, etc.

Each drawer **14** is provided at each end with a handle structure which also provides a means for supporting index cards. In the illustration given, a bracket member **18** is provided with a rear flange **19** which may be spot welded, as indicated at **20**, to the front wall **16** of the drawer **14**, as shown more clearly in Fig. 4. The bracket **18** is provided at its top forward end with an opening **21** adapted to receive a fastener hinge rod **22**. The bracket **18** is provided near its bottom with a pair of oppositely-disposed openings **23**, through which may be extended bolts **24** provided with nuts **25**. A handle portion **26** adapted to form with the bracket **18** a complete handle, is provided at its top with a pair of openings **27** adapted to receive the hange pin **22**. The handle portion **26** has a flared side extending downwardly and is provided with an arcuate slot **28**. When the handle member **26** is pivotally mounted upon the bracket **18**, the lower portion of the member **26** may be secured in any desired angular position relative to the bracket **18** by securing one of the bolts **24** tightly within the slot **28** by threading the nut **25** tightly thereon. When the desired angle is found, both bolts **24** may be tightened to lock the handle part **26** tightly in position so that it, together with the bracket **18**, may serve as a handle for drawing the drawer in one direction or the other. The

handle part **26** is provided at its front with a raised card holder **29** for receiving the index card or other insignia-bearing device. By this means, the handle part **26** upon a drawer at the bottom of the cabinet may be swung well outwardly and locked in this position so as to cause the index card to be directed toward the eye of the secretary seated in a chair nearby, as illustrated more clearly in Fig. 1. The topmost drawer will have the part **26** adjusted to substantially a vertical position so that it may be readily seen by the secretary or file clerk.

As illustrated more clearly in Fig. 1, the handle parts **26** are all positioned at different angles so that they may be quickly seen by one seated nearby without having to bend over in trying to decipher the cards near the bottom of the cabinet. Furthermore, in removing the drawer from the lower position in the cabinet, it is found that where the handle part **26** is swung outwardly at the angle indicated in Fig. 1, it is easier to remove and lift the drawer from the cabinet and to carry it to a desired point, while, when the handle part **26** is substantially vertical, as on the uppermost of the drawers, removal is easier when such handle is substantially vertical.

Operation

In the operation of the structure, the drawer may be drawn from either side of the cabinet forward to a selected position, the friction between the drawer and the supporting parts causing it to move only as far as it is drawn. If needed, the drawer will be removed entirely from the compartment, and from either end thereof, and then eventually returned.

The handle parts may be arranged at any desired angle so that the index cards on the forward end of the handle may be readily read from any single position adjacent thereto, the adjusted angle of the part **26** facilitating the removal of the drawer, as above set forth. If desired, the handle and the index card support may be formed of different parts and arranged and secured in separated relation on the front wall **16** of each drawer **14**. I prefer, however, to provide the two-piece handle structure, which not only makes it more convenient to grasp and lift out the lower drawers, but also supports the index cards in readily visible positions. It will be understood that the handle and index support part thereof may be utilized with ordinary drawers which may be drawn outwardly from but one direction in the cabinet.

In the modification shown in Figs. 6, 7 and 8, the handle member **30** is provided at each end with an angular side wall **31** having a laterally-turned flange **32** which may be spotwelded at **33** to the drawer **34**. The front flange **35** is provided at its upper and lower ends with folded-over flanges **36** which are open at their ends and permit the insertion of an index slip or card on which information is stated with respect to the contents of the drawer to which the handle **30** is secured. The forwardly-turned wall **35** thus provides a handle for manipulating the drawer, while at the same time this plate surface enclosed with the turned flanges **36** provides a support for the information slips which may be readily read by one sitting in a chair nearby.

If desired, the support for the drawer may be provided with an indentation receiving a bulged portion of the drawer for stopping the drawer at a desired point. In the structure shown in Figs. 1 to 5, inclusive, the

member **11** is shown provided with a sunken portion **37** and the drawer above is provided with a downwardly-bulged projection **38**, as shown more clearly in Fig. 4, to aid the user in locating the drawer in a desired closed position.

While, in the foregoing specification, I have set forth a single structure in considerable detail for the purpose of illustrating an embodiment of the invention, it will be understood that such details of structure may be varied widely by those skilled in the art without departing from the spirit of my invention.

I claim:

1. In combination with the end of a drawer, a bracket supported thereon and a sign-supporting member tiltably mounted upon said bracket for selective angular adjustment, means for securing said member in different angular positions upon said bracket, and a holder member secured to said first-mentioned member for supporting an indicia-bearing strip upon said first-mentioned member, said member and bracket forming together a handle for the drawer.

2. In combination with the end of a drawer adapted for use in a cabinet having a plurality of drawers arranged one above another, a sign-supporting member, means for supporting said member upon said end for selective angular adjustment relative thereto, means for securing said member in selected angular positions, and a holder secured to said member for supporting an indicia strip, said member and first mentioned means forming together a handle for the drawer.

3. In a cabinet structure having a plurality of drawers arranged one above another, a bracket for each of said drawers and being supported upon an end wall thereof, a sign-supporting member tiltably mounted upon said bracket for selective angular adjustment relative thereto, means for securing said member in different angular positions upon said bracket, and a holder member secured to said first mentioned member for supporting an indicia strip thereon, said first mentioned member and bracket forming together a handle for the drawer.

4. In a cabinet structure having a plurality of drawers arranged one above another, a handle for each of said drawers, each of said handles being tiltably mounted respectively upon the end wall of one of said drawers for selective angular adjustment relative thereto, means for releasably securing said handles in selected angular positions, and a holder member carried by each of said handles for supporting an indicia-bearing strip at an angle determined by the selected angular position of its handle.

5. In combination with the end wall of a drawer, a handle, means carried by said end wall for tiltably supporting said handle thereon for selected angular adjustment relative thereto, and means for releasably securing said handle in selected angular positions, said handle being equipped with means for carrying indicia strips.

References Cited in the file of this patent

UNITED STATES PATENTS

1,453,121	Benner	Apr. 24, 1923
1,774,236	Ohnstrand	Aug. 26, 1930
1,968,829	Harrington	Aug. 7, 1934
2,018,662	Curtis	Oct. 29, 1935
2,021,207	Stats	Nov. 19, 1935
2,335,391	Cushing	Nov. 30, 1943