June 17, 1930. A. E. BROUGHTON 1,764,777

MEANS FOR ELIMINATING WET STREAKS IN PAPER

Filed Dec. 31, 1927 2 Sheets-Sheet 1

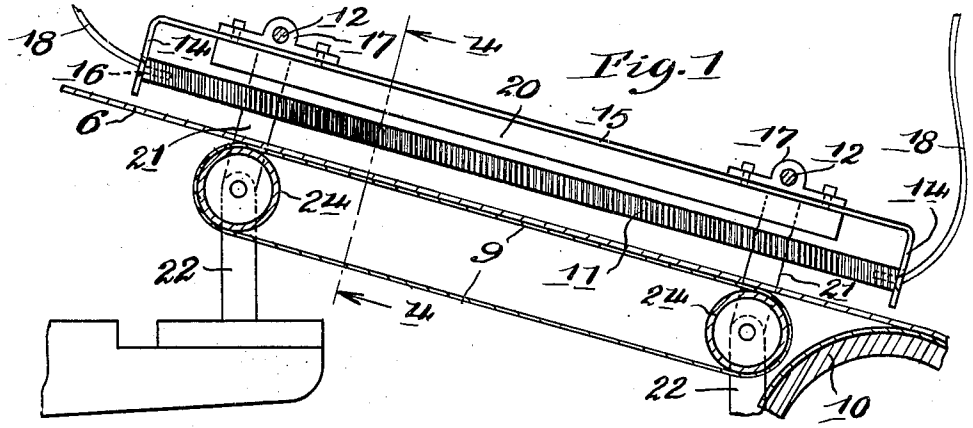

Fig. 1

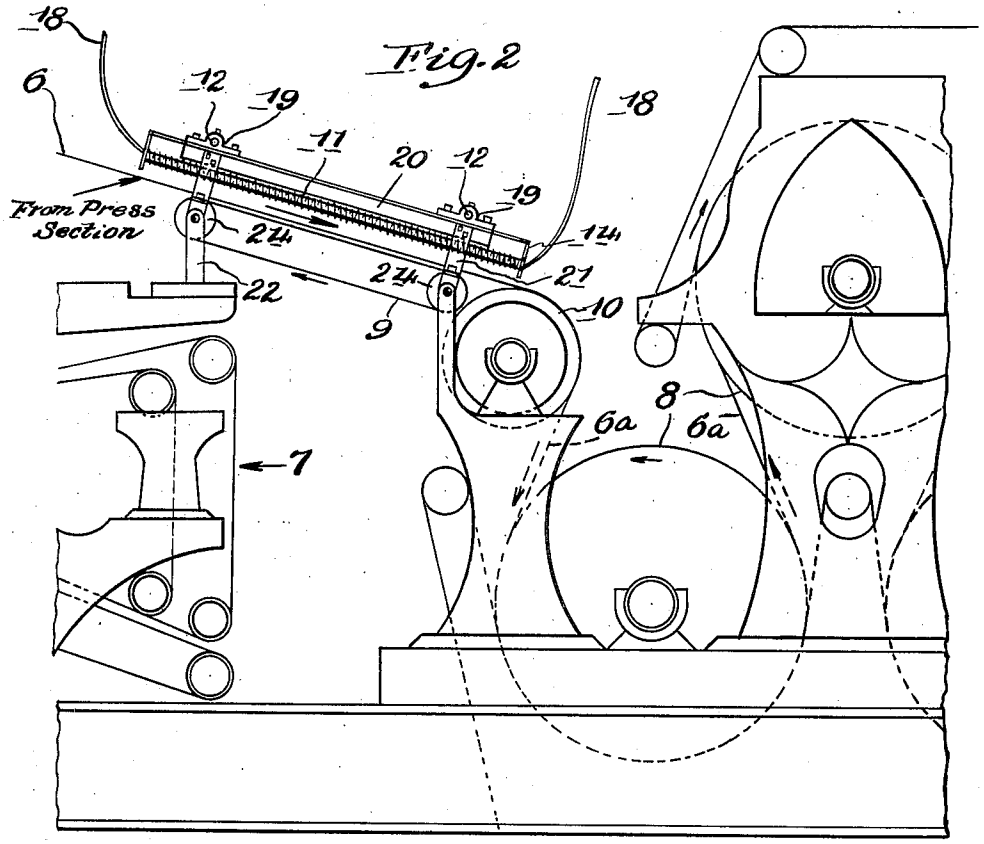

Fig. 2

Inventor

Arthur E. Broughton

By Stryker & Stryker

Attorneys

June 17, 1930. A. E. BROUGHTON 1,764,777

MEANS FOR ELIMINATING WET STREAKS IN PAPER

Filed Dec. 31, 1927 2 Sheets-Sheet 2

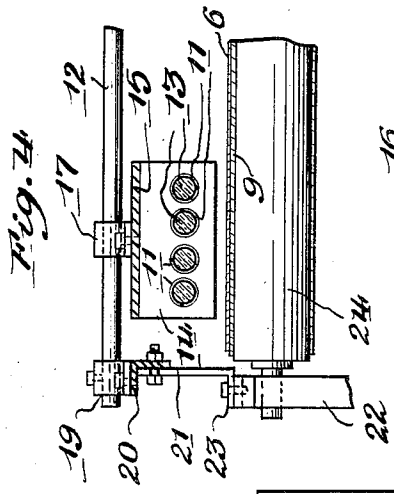

Fig. 4.

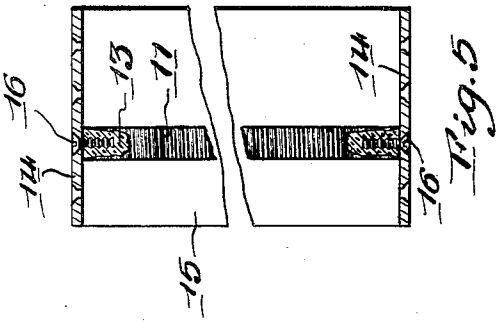

Fig. 5.

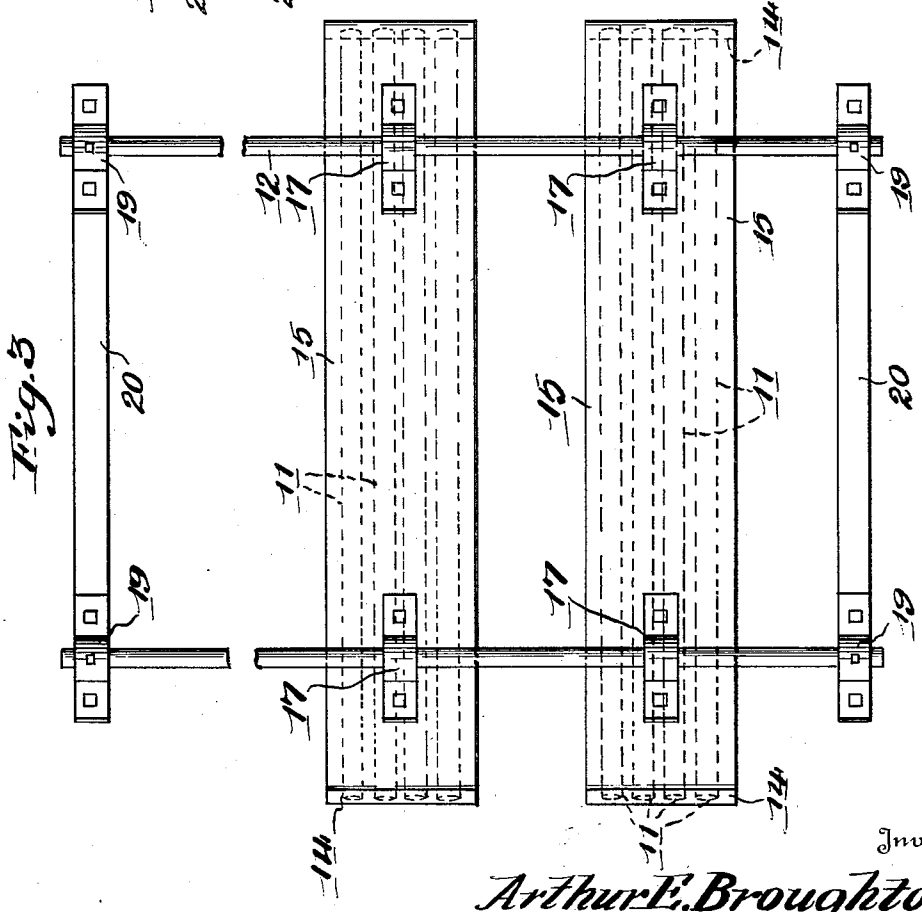

Fig. 3.

Inventor

Arthur E. Broughton

By Stryker & Stryker

Attorneys

Patented June 17, 1930 1,764,777

UNITED STATES PATENT OFFICE

ARTHUR E. BROUGHTON, OF MINNEAPOLIS, MINNESOTA

MEANS FOR ELIMINATING WET STREAKS IN PAPER

Application filed December 31, 1927. Serial No. 243,896.

Heretofore in the manufacture of paper upon the Fourdrinier and cylinder types of machines, and particularly in the higher speed machines and where wide sheets are produced it has been very difficult to secure uniform drying. Thus it has been found that longitudinal wet streaks appear in the finished sheet unless an undesirable amount of drying of the other portions of the sheet is provided for. These difficulties have been caused to a large degree by lack of uniformity of the pressure applied by the press rolls preparatory to delivering the sheet to the dryer proper. In the common types of machines at least one roll of each pair of press rolls has a compressible surface formed from a rubber composition which is crowned. No matter how carefully and accurately such press rolls may be crowned it often develops, after continued use, that the pressure of the press rolls upon the paper web becomes non-uniform across the web with the result that longitudinally extending, relatively wet portions or streaks are produced. Obviously these streaks or bands cannot be eliminated in the cylinder dryers which are designed to apply heat uniformly across the sheet.

It is the object of this invention to eliminate such longitudinal wet streaks and secure uniform drying of wide sheets in high speed machines by applying radiant heat to the limited portions of the paper webs which contain excessive amounts of moisture when such webs approach the dryers.

Another object is to provide a series of normally stationary heating elements or grids which are adjustable transverse the rapidly moving web to apply additional heat to any desired portion of the sheet.

The invention will be best understood by reference to the accompanying drawings, which illustrate the best form of my invention at present known to me. In the drawings Figure 1 is a typical longitudinal section taken between heating units of my improvements attached to a paper machine of common type; Fig. 2 is a side view of the device in its relation to the press and dryer sections of a Fourdrinier machine, fragmentary portions of said sections being shown diagrammatically; Fig. 3 is a plan view of the invention removed from the machine; Fig. 4 is a fragmentary section taken on the line 4—4 of Fig. 1 and Fig. 5 is a fragmentary bottom view, partially in horizontal section, showing one of the heating elements together with its support and reflector.

As best shown in Fig. 2, I prefer to mount my device in close proximity to the paper web 6 as it passes from the press section 7 to the dryers 8 of a paper machine of common type. As the press rolls and main dryer form no part of this invention their relative positions are merely indicated diagrammatically. It is to be understood that the web 6 when presented to my heating means has passed between the press rolls in the section 7, having been delivered from the third or last pair of press rolls (not shown). The web passes in the direction indicated by an arrow in Fig. 2 upon an endless moving belt 9 which supports it to a point adjacent to the so-called baby dryer 10. As indicated at 6^a the web then passes successively around the heated drying cylinders 8.

I supply radiant heat by means of heating elements 11 extending in close proximity to the web 6 as it approaches the baby dryer 10. These heating elements 11, as shown in Figs. 3 and 4, are preferably arranged in a series of grids or groups which are independently adjustable transverse the movement of the sheet upon a pair of rods 12. Each heating element 11 consists of a core 13 of heat resistent, insulating material upon which is wound a high resistance, electric conductor adapted to be heated by the passage of current therethrough. Downwardly projecting flanges 14 upon a reflector 15 afford supports for opposite ends of the cores 13 and suitable screws 16 (Fig. 5) are arranged to connect the ends of said cores with the flanges 14. As illustrated, each grid or group of heating elements comprises four of the elements 11 mounted in parallel relation beneath a reflector 15. Upon the upper surface of each reflector 15 is secured a pair of bearing brackets 17 which are perforated transversely to slidably receive the

supporting rods 12. Electric current for heating the elements 11 may be supplied through suitable circuit wires 18 connected to the coiled resistance wires at opposite ends thereof.

The rods 12 are secured at their ends in brackets 19 mounted upon longitudinal angle bars 20. These bars 20 are in turn supported, as indicated in Fig. 4, upon standards 21 bolted to the machine frame. In the machine illustrated journal bearings 22 for rollers 24 supporting the belt 9 are conveniently located for the attachment of the standards 21 and angular fee 23 on the lower ends of these standards are secured to the top of the bearings 22.

Operation

In operation when it develops that the paper delivered from the dryers 8 has not the requisite uniformity of dryness because of one or more longitudinal wet bands or streaks, the heating units carried by the combined supports and reflectors 15 are positioned directly above the wet streaks by merely sliding the supporting brackets 17 along the rods 12 to the desired positions. Now current is passed through the heating elements 11 so that heat is radiated thereby upon the excessively wet parts of the web. Obviously a number of the heating units or grids corresponding to the number of wet streaks may be supported upon the rods 12 and adjusted thereon independently of each other. Thus the excess of moisture is removed from the portions of the web 6 from which insufficient moisture has been removed by the press rolls before the web reaches the dryers 8. The amount of heat applied by each unit is readily adjusted by control of the current in any suitable or well known manner so that the desired compensation is effected. In this manner I obtain uniform drying across the sheet as well as longitudinally thereof. It will be understood that my device may be readily attached to any of the common types of paper machines by a simple modification of the attaching means.

Having described my invention what I claim is new and desire to protect by Letters Patent is:

1. An attachment for a paper machine comprising supporting means extending transverse a wet portion of the paper web, a plurality of normally stationary heating units adjustable transverse said web on said support in close proximity but out of contact with said web, each of said units being adapted to apply radiant heat to a selected, longitudinal band of said web and each extending a substantial distance in the direction of movement of said web but being of relatively narrow width.

2. An attachment for a paper machine having a press section and a dryer section adapted to successively receive the paper web, comprising a support extending transverse said web between said sections and a heating unit mounted on said support for adjustment transverse said web, said unit extending a substantial distance in the direction of movement of said web and being relatively narrow to apply heat to a selected, fractional, longitudinal band of said web.

3. An attachment for a paper machine having a press section and a dryer section adapted to successively receive the paper web comprising a support extending transverse said web between said sections and a plurality of heating units independently adjustable transverse said web on said support, adapted to apply heat to a selected, fractional, longitudinal band of said web, said units extending in close proximity to said web a substantial distance in the direction of travel of the same.

In testimony whereof, I have hereunto signed my name to this specification.

ARTHUR E. BROUGHTON.