(12) INTERNATIONAL APPLICATION PUBLISHED UNDER THE PATENT COOPERATION TREATY (PCT)

(19) World Intellectual Property Organization
International Bureau

(43) International Publication Date
28 March 2019 (28.03.2019)

WIPO | PCT

(10) International Publication Number
WO 2019/058257 A2

(51) International Patent Classification:
A61B 34/00 (2016.01)

(21) International Application Number:
PCT/IB2018/057175

(22) International Filing Date:
18 September 2018 (18.09.2018)

(25) Filing Language: English

(26) Publication Language: English

(30) Priority Data:
15/710,938 21 September 2017 (21.09.2017) US

(71) Applicant: **DEPUY SYNTHES PRODUCTS, INC.** [US/US]; 325 Paramount Drive, Raynham, Massachusetts 02767 (US).

(72) Inventors: **MATA, Mario**; 1301 Goshen Parkway, West Chester, Pennsylvania 19380 (US). **PIERSON, Glen**; 1301 Goshen Parkway, West Chester, Pennsylvania 19380 (US). **MIKHAIL, George**; 1301 Goshen Parkway, West Chester, Pennsylvania 19380 (US). **LARSEN, Scott**; 1301 Goshen Parkway, West Chester, Pennsylvania 19380 (US).

(74) Agent: **SHIRTZ, Joseph F.** et al.; JOHNSON & JOHNSON, One Johnson & Johnson Plaza, New Brunswick, New Jersey 08933 (US).

(81) Designated States *(unless otherwise indicated, for every kind of national protection available)*: AE, AG, AL, AM, AO, AT, AU, AZ, BA, BB, BG, BH, BN, BR, BW, BY, BZ, CA, CH, CL, CN, CO, CR, CU, CZ, DE, DJ, DK, DM, DO, DZ, EC, EE, EG, ES, FI, GB, GD, GE, GH, GM, GT, HN, HR, HU, ID, IL, IN, IR, IS, JO, JP, KE, KG, KH, KN, KP, KR, KW, KZ, LA, LC, LK, LR, LS, LU, LY, MA, MD, ME, MG, MK, MN, MW, MX, MY, MZ, NA, NG, NI, NO, NZ,

(54) Title: SURGICAL INSTRUMENT MOUNTED DISPLAY SYSTEM

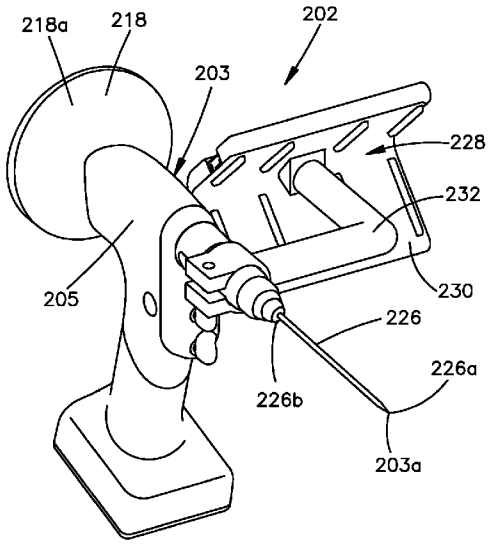

Fig.2B

(57) Abstract: A C-arm, or a mobile intensifier device, is one example of a medical imaging device that is based on X-ray technology. Because a C-arm device can display high-resolution X-ray images in real time, a physician can monitor progress at any time during an operation, and thus can take appropriate actions based on the displayed images. Monitoring the images, however, is often challenging during certain procedures, for instance during procedures in which attention must be paid to the patient's anatomy as well as a medical imaging device display. In an example, a surgical instrument assembly includes a processor, a surgical instrument configured to operate on an anatomical structure, and a display coupled to the processor and attached to the surgical instrument. The display can be configured to display visual information comprising X-ray images generated by a medical imaging device.

WO 2019/058257 A2

[Continued on next page]

OM, PA, PE, PG, PH, PL, PT, QA, RO, RS, RU, RW, SA, SC, SD, SE, SG, SK, SL, SM, ST, SV, SY, TH, TJ, TM, TN, TR, TT, TZ, UA, UG, US, UZ, VC, VN, ZA, ZM, ZW.

(84) **Designated States** *(unless otherwise indicated, for every kind of regional protection available)*: ARIPO (BW, GH, GM, KE, LR, LS, MW, MZ, NA, RW, SD, SL, ST, SZ, TZ, UG, ZM, ZW), Eurasian (AM, AZ, BY, KG, KZ, RU, TJ, TM), European (AL, AT, BE, BG, CH, CY, CZ, DE, DK, EE, ES, FI, FR, GB, GR, HR, HU, IE, IS, IT, LT, LU, LV, MC, MK, MT, NL, NO, PL, PT, RO, RS, SE, SI, SK, SM, TR), OAPI (BF, BJ, CF, CG, CI, CM, GA, GN, GQ, GW, KM, ML, MR, NE, SN, TD, TG).

Declarations under Rule 4.17:

— *as to applicant's entitlement to apply for and be granted a patent (Rule 4.17(ii))*

— *as to the applicant's entitlement to claim the priority of the earlier application (Rule 4.17(iii))*

Published:

— *without international search report and to be republished upon receipt of that report (Rule 48.2(g))*

— *in black and white; the international application as filed contained color or greyscale and is available for download from PATENTSCOPE*

SURGICAL INSTRUMENT MOUNTED DISPLAY SYSTEM

TECHNICAL FIELD

[0001] The present invention relates to systems that can be used in conjunction with medical imaging.

BACKGROUND

[0002] A C-arm, or a mobile intensifier device, is one example of a medical imaging device that is based on X-ray technology. The name C-arm is derived from the C-shaped arm used to connect an X-ray source and an X-ray detector with one another. Various medical imaging devices, such as a C-arm device, can perform fluoroscopy, which is a type of medical imaging that shows a continuous X-ray image on a monitor. During a fluoroscopy procedure, the X-ray source or transmitter emits X-rays that penetrate a patient's body. The X-ray detector or image intensifier converts the X-rays that pass through the body into a visible image that is displayed on a monitor of the medical imaging device. Because medical imaging devices such as a C-arm device can display high-resolution X-ray images in real time, a physician can monitor progress at any time during an operation, and thus can take appropriate actions based on the displayed images. Monitoring the images, however, is often challenging during certain procedures, for instance during procedures in which attention must be paid to the patient's anatomy as well as the display of the medical imaging device. For example, aligning a drill bit to a distal locking hole can be difficult if a medical professional is required to maneuver the drill while viewing the display of the medical imaging device.

SUMMARY

[0003] In an example, a surgical instrument assembly includes a processor, a surgical instrument configured to operate on an anatomical structure, and a display coupled to the processor and attached to the surgical instrument. The display can be configured to display fluoroscopic data, for instance X-ray images or video data, of the anatomical structure. The fluoroscopic data is generated by an imaging device. The surgical instrument assembly can further include a memory in communication with the processor. The memory can have stored therein instructions that, upon execution by the processor, cause the surgical instrument assembly to receive in real-time, via a wireless communications channel for example, the fluoroscopic data

from the imaging device. Further, the surgical instrument can include a proximal end and a working end opposite the proximal end. The working end can be configured to operate on the anatomical structure, and the display can be positioned so as to provide a line of sight to both the working end and the display from a location proximal of the surgical instrument. Further still, the display can be configured to provide a visual indication of an alignment of a cutting instrument of the surgical instrument with respect to a direction of X-ray travel from an X-ray transmitter of the imaging device to an X-ray receiver of the imaging device.

[0004] In another example, an accelerometer of a surgical instrument assembly is calibrated with a direction of X-ray travel from an X-ray generator to an X-ray receiver of a medical imaging device. The surgical instrument assembly can include a drill having a drill bit. The surgical instrument assembly can display an X-ray image of an anatomical structure generated by the medical imaging device. The X-ray image can include a target location. A tip of the drill bit can be positioned on the anatomical structure, and the surgical instrument assembly can display a representation of a position of the tip of the drill bit with the target location. The surgical instrument assembly can further display an orientation image that includes a static region and a movable indicator that is representative of an orientation of the drill bit, wherein the drill is oriented with the direction of X-ray travel when the movable indicator has a predetermined spatial relationship to the static region. A hole can be drilled in the anatomical structure while the tip of the drill bit is aligned with the target location, and the movable indicator has the predetermined spatial relationship to the static region.

[0005] The foregoing summarizes only a few aspects of the present disclosure and is not intended to be reflective of the full scope of the present disclosure. Additional features and advantages of the disclosure are set forth in the following description, may be apparent from the description, or may be learned by practicing the invention. Moreover, both the foregoing summary and following detailed description are exemplary and explanatory and are intended to provide further explanation of the disclosure.

BRIEF DESCRIPTION OF THE DRAWINGS

[0006] The foregoing summary, as well as the following detailed description of example embodiments of the present disclosure, will be better understood when read in conjunction with the appended drawings. For the purposes of illustrating the example embodiments of the present disclosure, references to the drawings are made. It should be

understood, however, that the application is not limited to the precise arrangements and instrumentalities shown. In the drawings:

[0007] Fig. 1 depicts an example imaging system in accordance with an example embodiment, wherein the example imaging system includes an imaging device in electrical communication with a surgical instrument assembly.

[0008] Figs. 2A and 2B are perspectives view of the example surgical instrument assembly depicted in Fig. 1, which includes a display attached to a surgical instrument.

[0009] Fig. 2C is a rear elevation view of the example surgical instrument assembly.

[0010] Fig. 2D is a side elevation view of the example surgical instrument assembly.

[0011] Fig. 3 is a block diagram of example computing devices for use in the imaging system shown in Fig. 1.

[0012] Fig. 4A depicts an example X-ray image of an anatomical structure that can be displayed by the surgical instrument assembly depicted in Figs. 2A-D, wherein the X-ray image includes a target location.

[0013] Fig. 4B depicts another example X-ray image of the anatomical structure, showing a position of a cutting instrument of the surgical instrument assembly relative to the target location of the anatomical structure.

[0014] Fig. 4C depicts another example X-ray image of the anatomical structure, wherein a tip of the cutting instrument is positioned over the target location.

[0015] Fig. 5A is an example screen shot of the display of the surgical instrument assembly, showing a visual indication of an alignment of the cutting instrument with respect to a direction of X-ray travel from an X-ray transmitter to an X-ray receiver of the imaging device, wherein the cutting instrument is out of alignment with respect to a first direction.

[0016] Fig. 5B is another example screen shot of the display of the surgical instrument assembly, showing the visual indication of the alignment of the cutting instrument with respect to the direction of X-ray travel, wherein the cutting instrument is out of alignment with respect to a second direction that is substantially perpendicular to the first direction.

[0017] Fig. 5C is another example screen shot of the display of the surgical instrument assembly, showing the visual indication of the alignment of the cutting instrument with respect to the direction of X-ray travel, wherein the cutting instrument is aligned with the direction of X-ray travel such that the cutting instrument and the direction of X-ray travel have the same orientation.

[0018] Fig. 6A depicts the example imaging system shown in Fig. 1, showing an example anatomical structure and an example orientation of the surgical instrument assembly.

[0019] Fig. 6B depicts another example orientation of the surgical instrument assembly in the imaging system shown in Fig. 6A.

DETAILED DESCRIPTION

[0020] A medical professional can use a medical imaging device, for instance a C-arm device, to perform various medical procedures on a patient. For example, medical professionals can use imaging devices to assess bone fractures, guide surgical procedures, or verify results of surgical repairs. C-arm devices, for example, provide spot imaging and fluoroscopic imaging, which allows the generation of continuous real-time moving images. Such images are provided to a display of the C-arm device. It is recognized herein that, in some cases, the display of the C-arm system is not positioned in a manner that adequately assists a medical professional. In various embodiments described herein, images provided by imaging devices are transmitted in real-time to a display that can be mounted to a surgical instrument, such that fluoroscopic imaging provided by the imaging device can be viewed by a medical professional as the medical professional operates and views a working end of the surgical instrument. The display can receive the images in real-time, such that the images are displayed by the display at the same time that the images are generated by the imaging device. In one example, the display is mounted to a surgical drill, such that fluoroscopic images provided by the imaging device can be viewed during an intramedullary (IM) nailing procedure. In an embodiment, an alignment application can also be rendered by the display mounted to the surgical drill, so as to guide the medical professional during the IM nailing procedure.

[0021] As an initial matter, because fluoroscopy is a type of medical imaging that shows a continuous X-ray image on a monitor, the terms fluoroscopic data, fluoroscopic image, video data, and X-ray image may be used interchangeably herein, without limitation, unless otherwise specified. Thus, an X-ray image may refer to an image generated during a fluoroscopic procedure in which an X-ray beam is passed through the anatomy of a patient. Further, it will be understood that fluoroscopic data can include an X-ray image, video data, or computer-generated visual representations. Thus, fluoroscopic data can include still images or moving images.

[0022] Referring to Fig. 1, a medical imaging system 102 can include a medical imaging device 104 and a surgical instrument assembly 202 in electrical communication with the

imaging device 104. The medical imaging device 104, which can be a C-arm device, can include an X-ray generator or transmitter 106 configured to transmit X-rays through a body (e.g., bone) and an X-ray detector or receiver 108 configured to receive the X-rays from the X-ray transmitter 106. Thus, the medical imaging device 104 can define a direction of X-ray travel 128 from the X-ray transmitter 106 to the X-ray receiver 108. The X-ray transmitter 106 can define a flat surface 106a that faces the X-ray receiver 108. The medical imaging device 104 can further include an arm 110 that physically connects the X-ray transmitter 106 with the X-ray receiver 108. The medical imaging device 104 can further be communication with a medical imaging device display 112 that is configured to display X-ray images from the X-ray detector 108. In some cases, the medical imaging device display 112 can be hard-wired with the X-ray detector 108, such that the display 112 can be in a fixed position relative to the arm 110.

[0023] The medical imaging device 104 is presented as a C-arm device to facilitate description of the disclosed subject matter, and is not intended to limit the scope of this disclosure. Further, the imaging system 102 and the imaging device 104 are presented as a medical imaging system and a medical imaging device, respectively, to facilitate description of the disclosed subject matter, and are not intended to limit the scope of this disclosure. Thus, it will be appreciated that other devices, systems, and configurations may be used to implement the embodiments disclosed herein in addition to, or instead of, a system such as the system 102, and all such embodiments are contemplated as within the scope of the present disclosure. It is recognized herein that the position of the display 112 can create problems for a medical professional. For example, in some cases, the medical professional may need to view images or data rendered by the display 112 while viewing a patient positioned between the X-ray generator 106 and the X-ray detector 108. In an example, a medical professional may face challenges placing distal locking screws during an IM nailing procedure due to insufficient assistive instruments or guidance systems, such as an aiming Arm used in placement of proximal screws. Distal screws are commonly inserted in a freehand technique under fluoroscopic guidance. The freehand technique is commonly referred to as the perfect circle technique. For example, once a perfect circle is established during an IM nailing procedure, it may be difficult to properly align a drill bit to the axis of the distal locking hole due to lack of visibility while using radiographic images. Improper alignment can lead to breaching or cracking of an implant during the drilling of a pilot hole, which can result in implant breakage, poor reduction/fixation, delay of surgery, or the like. It is further recognized herein that an orientation of an X-ray image rendered by the display 112 might not match the orientation of the patient's anatomy, thereby creating further

challenges for a medical professional. In various examples described herein, a surgical instrument assembly can be configured so as guide and help a medical professional during various operations, such as an IM nailing procedure.

[0024] Referring now to Fig. 3, in one embodiment, data (e.g., video or still images) provided by the medical imaging device 104 can be received by an instrument application, for instance a fluoroscopic mirror application, which can be a program, such as a software or hardware or combination of both, that can be run on any suitable computing device. A user can use the instrument application to view images generated by the medical imaging device 104. The instrument application can receive and display fluoroscopic images at various locations, for instance at a location that is aligned with the view of a patient.

[0025] Referring to Figs. 2 and 3, any suitable computing device 204 can be configured to host the instrument application. It will be understood that the computing device 204 can include any appropriate device, examples of which include a portable computing device, such as a laptop, tablet, or smart phone. In another example, the computing device 204 can be internal to the surgical instrument 203.

[0026] In an example configuration, the computing device 204 includes a processing portion or unit 206, a power supply 208, an input portion 210, a display 212, a memory portion 214, a user interface portion 216, and an accelerometer 215. It is emphasized that the block diagram depiction of computing device 204 is an example and not intended to imply a specific implementation and/or configuration. The processing portion 206, input portion 210, display 212, memory 214, user interface 216, and accelerometer 215 can be coupled together to allow communications therebetween. The accelerometer 215 can be configured to generate accelerometer information that corresponds to an orientation of the computing device 204. As should be appreciated, any of the above components may be distributed across one or more separate devices and/or locations.

[0027] In various embodiments, the input portion 210 includes a receiver of the computing device 204, a transmitter of the computing device 204, or a combination thereof. The input portion 210 is capable of receiving information, for instance fluoroscopic data in real-time, from the medical imaging device 104. As should be appreciated, transmit and receive functionality may also be provided by one or more devices external to the computing device 204, and thus the surgical instrument assembly 202.

[0028] Depending upon the exact configuration and type of processor, the memory portion 214 can be volatile (such as some types of RAM), non-volatile (such as ROM, flash

memory, etc.), or a combination thereof. The computing device 204 can include additional storage (e.g., removable storage and/or non-removable storage) including, but not limited to, tape, flash memory, smart cards, CD-ROM, digital versatile disks (DVD) or other optical storage, magnetic cassettes, magnetic tape, magnetic disk storage or other magnetic storage devices, universal serial bus (USB) compatible memory, or any other medium which can be used to store information and which can be accessed by the computing device 204.

[0029] The computing device 204 also can contain the user interface portion 216 allowing a user to communicate with the computing device 204. The user interface 216 can include inputs that provide the ability to control the computing device 204, via, for example, buttons, soft keys, a mouse, voice actuated controls, a touch screen, movement of the computing device 204, visual cues (e.g., moving a hand in front of a camera on the computing device 204), or the like. The user interface portion 216 can provide outputs, including visual information (e.g., via a display), audio information (e.g., via speaker), mechanically (e.g., via a vibrating mechanism), or a combination thereof. In various configurations, the user interface portion 216 can include a display, a touch screen, a keyboard, a mouse, an accelerometer, a motion detector, a speaker, a microphone, a camera, a tilt sensor, or any combination thereof. The user interface portion 216 can further include any suitable device for inputting biometric information, such as, for example, fingerprint information, retinal information, voice information, and/or facial characteristic information. Thus, a computer system such as the computing device 204 can include a processor, a display coupled to the processor, and a memory in communication with the processor. The memory can have stored therein instructions that, upon execution by the processor, cause the computer system to perform operations, such as the operations described herein. The display 212 can be configured to display visual information, such as described with reference to Figs. 4A-C and Figs. 5A-C.

[0030] Referring to Figs. 1 and 3, a transmitter unit 114 can be electrically coupled to, or can be part of, the medical imaging device 104. The transmitter unit 114 can be any suitable computing device configured to receive and send images, for instance video signals including fluoroscopic images. It will be understood that the transmitter unit 114 can include any appropriate device, examples of which include a portable computing device, such as a laptop, tablet, or smart phone.

[0031] Referring in particular to Fig. 3, in an example configuration, the transmitter unit 114 can include a processing portion or unit 116, a power supply 118, an input portion 120, and an output portion 122. It is emphasized that the block diagram depiction of transmitter unit

114 is an example and not intended to imply a specific implementation and/or configuration. The processing portion 116, input portion 120, and output portion 122 can be coupled together to allow communications therebetween. As should be appreciated, any of the above components may be distributed across one or more separate devices and/or locations.

[0032] In various embodiments, the input portion 120 includes a receiver of the transmitter unit 114, and the output portion 122 includes a transmitter of the transmitter unit 114. The input portion 120 is capable of receiving information, for instance fluoroscopic images or video data, from the medical imaging device 104, in particular an output interface 105 of the medical imaging device 104. The output interface 105 can include a coaxial output, a usb output, a component output, a wireless output, or the like. As should be appreciated, transmit and receive functionality may also be provided by the medical imaging device 104. In an example, the transmitter unit 114 is electrically coupled to the output interface 105 of the medical imaging device 104, so as to establish a wired or wireless electrical connection between the transmitter unit 114 and the display 112. The output interface 105 can include or more video output connectors using the matching input module. In an example, the processing portion 116, which can include or more processors running on an embedded operating system, can detect the presence of a signal, for instance a video signal including fluoroscopic images, from the medical imaging device 104. The processing portion 116 can process the signal as necessary for transmitting to the surgical instrument assembly 202. For example, the processing portion 116 can compress the signal so as to reduce the bandwidth that is used for transmitting the signal.

[0033] After the processing portion 116 performs processing on the video signal, as necessary, the video signal that can include fluoroscopic images can be sent by the output portion 122 of the transmitter unit 114 to the input portion 210 of the computing device 204. The output portion 122 of the transmitter unit 114 can be configured to transmit fluoroscopic images in accordance with any communication protocol as desired. For example, the output portion 122 can include a ZigBee module connected to the processing portion 206 via a universal serial bus (USB), such that the output portion 122 can send data wirelessly (via a wireless communications channel) in accordance with any ZigBee protocol. The output portion 122 can send video signals, for instance fluoroscopic images, over Wi-Fi, Bluetooth, broadcast, or any other wireless communication channels as desired.

[0034] Accordingly, the input portion 210 of the device 204 can receive video signals in real-time, for instance fluoroscopic images, which are sent via a wireless communication channel from the medical imaging device 104. The input portion 210 can be configured to

receive ZigBee messages, Wi-Fi messages, Bluetooth messages, broadcast messages, or messages formatted in accordance with any wireless protocol as desired. In an example, when the input portion 210 of the device 204 receives the fluoroscopic images from the medical imaging device 104, the images can be retrieved and verified by the processing portion 206 of the computing device 204. For example, the processing portion 206 can verify that the received images are from the appropriate medical imaging device. The images can be forwarded to the display 212, for example, when the images are verified. The processing portion 206 can also ensure that valid data is displayed. For example, if there is an interruption to the wireless communication channel or connection between the computing device 204 and the medical imaging device 104, the processing portion 206 can identify the interruption, and send a message to the display 212 so that the interruption is conveyed to a medical professional who views the display 212. In some cases, the processor 206 can cause the surgical instrument assembly 202 to display an indication of error on the display 212 when a quality of the communication link between the imaging device 104 and the surgical instrument assembly 202 is below a predetermined threshold. Thus, a wireless point-to-point communication channel or connection between the transmitter unit 114 and the computing device 204 can be established, and the wireless point-to-point connection can be managed by the input portion 210 and the output portion 122 on the physical layer, and the processing portions 116 and 206 at the application layer.

[0035] Referring now to Figs. 2A-D, the medical imaging system 102 can include the surgical instrument assembly 202 that can include the computing device 204 mounted to a surgical instrument 203. The surgical instrument 203 can be configured to operate on an anatomical structure, such as an anatomical structure 124. The surgical instrument 203 can define a body 205, and the computing device can be attached anywhere to the body 205 as desired. In an example, the computing device 204, and thus the display 212, can be supported by a mount 228. The mount 228 can include a support surface 230 that supports the computing device 204, and thus the display 212. The mount 228 can further include an arm 232 attached to the support surface 230 and the body 205 of the surgical instrument 203, such that the display 212 is in a fixed position relative to the body 205 of the surgical instrument 203. The arm 232 or the support surface 230 can be configured to rotate, so as to adjust the viewing angle of the display 212. The mount 228 can be positioned such that the display does not interfere with the operation of the surgical instrument 203. It will be understood that the computing device 204 can be alternatively mounted to the surgical instrument 205 as desired. It will also be understood

that the computing device 204 can alternatively be monolithic to the surgical instrument 203. Further, though the surgical instrument 203 is depicted as a surgical drill for purposes of example, it will be appreciated that the computing device 204 can be mounted to, or can be monolithic with, numerous suitable alternative equipment or instruments. For example, the surgical instrument assembly 202 can include an instrument or equipment configured to target an area of bone or other part of the anatomy, remove a medical implant, perform an osteotomy, or any other procedure, for instance any other procedure using fluoroscopy, as desired. Thus, although the anatomical structure 124 is presented as a bone, it will be understood that structures on which the surgical instrument assembly can be configured to operate are not limited to bones.

[0036] The computing device 204, and thus the surgical instrument assembly 202, can include the display 212 that can be attached to the surgical instrument. The display 212 can be configured to display fluoroscopic images of the anatomical structure 124 that are generated by the imaging device 104. In an example configuration, the display 212 can display fluoroscopic images of the anatomical structure 124 in real-time, such that the images of the anatomical structure 124 are displayed by the display 212 at the same time that the images are generated by the imaging device 104. In some cases, the display 212, and thus the surgical instrument assembly 202, can include a plurality of displays, for instance a first display 212a and a second display 212b that has a different orientation as compared to an orientation of the first display 212a. In another example configuration, the display 212, and thus the surgical instrument assembly 202, includes only one display.

[0037] With continuing reference to Figs. 2A-D, the surgical instrument 203 can define a proximal end 203b and a working end 203a opposite the proximal end 203b. The working end 203a can be configured to operate on, for instance cut, drill, or otherwise target, a structure, for instance the anatomical structure 124, of a medical patient. The display 212, in particular the first display 212a and the second display 212b, can be positioned so as to provide a line of sight to both the working end 203a and the display 212 from a location proximate of the surgical instrument 203. Thus, in some cases, for example, a medical professional can, while operating the surgical instrument 203, view both the display 212 and the working end 203a of the surgical instrument 203.

[0038] In an example, the surgical instrument 203 includes a cutting instrument 226 that includes a proximal end 226b adjacent to the body 205 of the surgical instrument 203, and a cutting tip 226a opposite the proximal end 226b of the cutting instrument 226. The cutting tip 226a can define a terminal end of the cutting instrument that is opposite to the proximal end

226b of the cutting instrument 226. The cutting instrument 226 can have the cutting tip 226a that can be configured to remove anatomical material from an anatomical structure, for instance the anatomical structure 124. In the illustrated example, the cutting instrument 226 is a drill bit, and the cutting tip 226a is a tip of the drill bit, though it be appreciated that other instruments and configurations may be used to implement the embodiments disclosed herein in addition to, or instead of, an instrument such as the cutting instrument 226, and all such embodiments are contemplated as within the scope of the present disclosure.

[0039] The surgical instrument assembly 202 can include an alignment tool 218, for instance an axis alignment tool, mounted to the body 205 of the surgical instrument 203. It will be understood that the alignment tool 218 can alternatively be monolithic to the surgical instrument 203. The alignment tool 218 can be rigidly attached to the body 205 of the surgical instrument 203. In an example, the cutting instrument 226 is located at the working end 203a of the surgical instrument 203, and the alignment tool 218 is located at the proximal end 203b of the surgical instrument, though it will be understood that that the alignment tool 218 can be alternatively located as desired. The alignment tool 218 can define a first surface 218a proximate to the surgical instrument 203 and a second surface 218b opposite the first surface 218a. The second surface 218b can define a flat surface, and thus the alignment tool 218 can define a flat surface. Thus, the second surface 218b of the alignment tool 218 can define a plane. The cutting instrument 226 (e.g., drill bit) can be oriented perpendicularly to the plane defined by the second surface 218b of the alignment tool 218. In an example, the alignment tool 218 includes a pin that is oriented perpendicularly to the plane defined by the second surface 218b of the alignment tool. The pin can be configured to be received by a hole defined by the proximal end 203b of the surgical instrument 203. The hole defined by the proximal end 203b of the surgical instrument 203 can have a parallel orientation with the cutting instrument 226, such that, when the pin of the alignment tool 218 is received by the hole defined by the proximal end 203b of the alignment tool 218, the second surface 218b of the alignment tool defines the plane that is perpendicular to the orientation of the cutting instrument 226.

[0040] Referring also to Figs. 4A-C, fluoroscopic images of the anatomical structure 124 can include one or more target locations 126. The target locations 126 can represent locations on the anatomical structure 124 that the surgical instrument 203 can drill, cut, or otherwise target. In accordance with the illustrated example, the target locations 126 can be defined by an implant 125, for instance an IM nail or rod, in a bone. It will be understood that an example operation performed by the surgical instrument assembly is presented as an IM nailing

operation to facilitate description of the disclosed subject matter, and the example IM operation is not intended to limit the scope of this disclosure. Thus, it will be appreciated that the surgical instrument assembly 202 may be used to perform other operations in addition to, or instead of, an operation such as the example IM nailing operation, and all such embodiments are contemplated as within the scope of the present disclosure.

[0041] The display 212 can display fluoroscopic images associated with IM nailing operations, among others. The display 212 can be configured to display fluoroscopic images, for instance example fluoroscopic images 400a-c of the anatomical structure 124, generated by, and received from, the medical imaging device 104. Referring in particular to Fig. 4A, the display 212, for instance the first display 212a, can display the example fluoroscopic image 400a, of the implant 125 in the anatomical structure 124. The implant 125 can define one or more target locations 126 at which material can be removed from the anatomical structure 124. In an example IM nailing operation, by viewing the display 212 that displays fluoroscopic images from the imaging device 104, a medical professional can maneuver the patient or the imaging device 104 while viewing the patient and display 212 simultaneously, until the target locations 126 define perfect circles, as illustrated in Fig. 4A. In the IM nailing example, when the one or more target locations 126 define perfect circles, holes can be drilled at the target locations 126 for locking screws.

[0042] Referring now to Fig. 4B, the display 212 can display the example fluoroscopic image 400b. Thus, the display 212 can be configured to display a position of the cutting tip 226a of the cutting instrument 226 relative to the target location 126 on the fluoroscopic images of the anatomical structure 124. The fluoroscopic image 400b can depict, for example, the position of the cutting tip 226a that is shown in Fig. 6B. The cutting tip 226a can be configured to remove anatomical material from the one or more target locations 126 of the anatomical structure 124. Further, as shown in Fig. 4C, the tip 226a of the cutting instrument 226 (e.g., drill bit) can be positioned on the anatomical structure 124, for instance at the center of the target location 126. The display 212 can be positioned so as to provide a line of sight to both the tip 226a and the display 212 from a location proximate of the surgical instrument 203, such that a medical professional can view both the fluoroscopic images 400b and 400c, and thus the tip 226a, and the anatomical structure 124, so as to center the tip 226a at the target location 126. The display 212 of the surgical instrument 203 can mirror the display 112 of the medical imaging device 104, such that the display 212 of the surgical instrument assembly 202 can render the same images

that the display 112 of the imaging device 104 renders at the same time, so as to display images in real-time.

[0043] In some cases, for instance based on a user selection via the user interface 216, the surgical instrument assembly 202 can rotate the displayed fluoroscopic images on the display 212 to a rotated orientation such that a vertical or horizontal direction on the display 212 corresponds with a vertical or horizontal direction, respectively, of movement of the surgical instrument 203 relative to the anatomical structure 124. Thus, in some cases, the fluoroscopic images in the rotated orientation that are displayed by the display 212 can be rotated as compared to the fluoroscopic images displayed on the medical imaging device display 112 that is separate from the display 212 that is coupled to the surgical instrument 203.

[0044] Referring now to Figs. 5A-C, the display 212 can also be configured to provide a visual indication, for instance an orientation image 129, of an alignment of the cutting tip 226a with respect to the direction of X-ray travel 128 from the X-ray transmitter 106 to the X-ray receiver 108. In an example, the display 212 includes the first display 212a and the second display 212b, and the first display 212a is configured to display fluoroscopic images (e.g., fluoroscopic images 400a-c) from the imaging device 104, and the second display 212b is configured to display orientation screens (e.g., orientation screens 500a-c) that include a visual indication of an orientation of the cutting instrument 226. It will be understood that the first display 212a can also, or alternatively, display orientation screens, and the second display 212b can also, or alternatively, display fluoroscopic images. Further, the display 212 can, in some cases, include only one display, which can display both fluoroscopic images and orientation screens. In an example, a user can select an option via the user interface 216 to select which of the fluoroscopic images or orientation screens are displayed by the display 212. In another example, the display 212 can be separated, for instance split in half, such that both the fluoroscopic images and the orientation screens can be displayed by the display 212 at the same time.

[0045] The visual indication of alignment, for instance the orientation image 129, can be based on the direction of X-ray travel 128, and can further be based on accelerometer information that corresponds to an orientation of the cutting instrument 226. For example, the accelerometer 215 of the surgical instrument assembly 202 can be calibrated with the direction of X-ray travel 128 travel from the X-ray generator 106 to the X-ray receiver 108 of the medical imaging device 104. In an example calibration, the alignment tool 218 that is attached to the surgical instrument 203 is configured to register with a surface of the medical imaging device

104 that has a predetermined orientation so as to align the cutting instrument 226 (e.g., drill bit) with the direction of X-ray travel 128. In one example, the alignment tool 218 is configured to register with the flat surface 106a of the X-ray transmitter, though it will be understood that the alignment tool 218 can be configured to register with other surfaces of the medical imaging device 104 as desired. In particular, the second surface 218b of the alignment tool 218 can be a flat surface that can abut the flat surface 106a of the medical imaging device 104 when the cutting instrument 226 is aligned with the direction of X-ray travel 128. Continuing with the example, a zero value can be set when the surface 218b of the alignment tool 218 abuts the flat surface 106a of the X-ray generator 106, so as to calibrate the accelerometer 215 with the medical imaging device 104, in particular the direction of X-ray beams generated by the medical imaging device 104. In one example, to set the zero value, thereby calibrating the accelerometer 215 with the direction of X-ray travel 128, a user can actuate a calibration option 134 on the display 212 when the surface 218b of the alignment tool is flat against the flat surface 106a of the X-ray generator 106, such that the zero value is set when the cutting instrument 226 is oriented along the direction of X-ray travel 128.

[0046] In another example, a calibration instrument can be part of, or attached to, the medical imaging device 104. When the medical imaging device 104, and in particular the direction of X-ray travel 128, is oriented in the desired position to perform an operation, the calibration instrument of the medical imaging device can identify a zero value relative to gravity, such that the zero value corresponds to the desired direction of X-ray travel 128. The calibration instrument 128 of the medical imaging device 104 can send the zero value relative to gravity to the accelerometer 215. The accelerometer 215 can set its zero value relative to gravity to the zero value that it receives from the calibration instrument of the medical imaging device 104, thereby calibrating the accelerometer 215 with the direction of X-ray travel 128. Thus, the accelerometer 215 can indicate the zero value when the cutting instrument 226 is oriented along the direction of X-ray travel 128.

[0047] In an example, the accelerometer 215 corresponds to an orientation of the display 212. Thus, in some cases, when the orientation of the display 212 with respect to the cutting instrument 226 is adjusted, the zero value is re-set to re-calibrate the accelerometer 215 with the direction of X-ray travel 128. In some examples, the display 212 has one or more preconfigured orientations (e.g., 90 degrees, 75 degrees, etc.) with respect to the cutting instrument 226. Thus, in some cases, after calibration at a first preconfigured orientation, the display 212 can be moved to a second preconfigured orientation. In an example, the user can

select, using the user interface 216, the preconfigured orientation at which the display 212 is positioned. The accelerometer 215 can receive the second preconfigured orientation, and adjust the zero value accordingly, such that the display 212 is adjusted without the accelerometer being re-calibrated. In yet another example, the medical imaging device 104 includes an accelerometer that can identify a change in orientation of the direction of X-ray travel. In this example, the accelerometer of the medical imaging device can send the change in orientation of the direction of X-ray travel to the surgical instrument assembly 202, such that the zero value can be re-set without re-calibrating the accelerometer 215. Thus, the zero value can be adjusted in accordance with a change in the orientation of the X-ray generator 106 and X-ray receiver 108.

[0048] When the accelerometer 215 of the surgical instrument assembly 202 is calibrated with the direction of X-ray travel, for example, the accelerometer can generate accelerometer information that indicates an orientation of the cutting instrument 226 relative to the direction of X-ray travel 128. The accelerometer information can be displayed by the display 212 in various orientation screens, for instance orientation screens 500a-c, which can include the orientation image 129. By way of an IM nailing example, by viewing the orientation image 129 while using the surgical instrument assembly 202, the cutting instrument 226 can be maintained at the proper orientation while drilling. That is, holes can be drilled at the target locations 126 that define perfect circles.

[0049] For example, referring to Figs. 5A-5C, the orientation screens 500a-c can include the orientation image 129 that can include a static region 130 and a movable indicator 132. The movable indicator 132 can be representative of the orientation of the cutting instrument 226. In an example, the cutting instrument 226 is oriented with the direction of X-ray travel 128 when the movable indicator 132 has a predetermined spatial relationship to the static region 130. In an example, a hole is drilled in the anatomical structure 124 while the tip 226a of the cutting instrument 226 (e.g., drill bit) is aligned with the target location 126, and the movable indicator 132 has the predetermined spatial relationship to the static region 130. It will be understood that the predetermined spatial relationship can vary as desired. In some cases, for example, the cutting instrument 226 is oriented with the direction of X-ray travel 128 when the movable indicator 132 overlies the static region 130. In some cases, as shown in Fig. 5C, the cutting instrument 226 is oriented with the direction of X-ray travel 128 when the movable indicator 132 is within a boundary defined by the static region 130.

[0050] Thus, in operation, the display 212 can receive and display a plurality of X-ray images in real-time, and the display 212 can display the orientation image 129 as the surgical

instrument 203 is operated. In an example, referring to Fig. 6A, the surgical instrument 203 can be operated along a first direction D1 that is parallel to the direction of X-ray travel 128, so as to drill hole along the first direction D1. During drilling, for example, as the orientation of the cutting instrument 226 moves away from the zero value, the movable indicator 132 can move away from the static region 130. The movable indicator 132 can move relative to the static region 130 at the same time that the orientation of the cutting instrument 226 moves relative to the zero value, such that the movable indicator 132 provides a real-time representation of the orientation of the cutting instrument 226. For example, as the proximal end 226b of the cutting instrument 226 moves along a second direction D2 relative to the cutting tip 226a of the cutting instrument 226, the movable indicator 132 can move along the second direction D2 (e.g., see Fig. 5A). The second direction D2 can be perpendicular to the first direction D1. Similarly, as the proximal end 226b of the cutting instrument 226 moves along a third direction D3 relative to the cutting tip 226a of the cutting instrument 226, the movable indicator 132 can move along the third direction D3 (e.g., see Fig. 5B). The third direction D3 can be perpendicular to both the first and second directions D1 and D2, respectively. Further, it will be understood that as the proximal end 226b of the cutting instrument 226 moves along both the second and third directions relative to the cutting tip 226a of the cutting instrument 226, the movable indicator 132 can move along both the second and third directions D3. Further, the orientation screens 500a-c can include a numerical representation 136 of the orientation of the cutting instrument 226 along the second and third directions D2 and D3.

[0051] Referring in particular to Fig. 5C, when the cutting instrument 226 is oriented in accordance with the zero value, the movable indicator 132 can be positioned within a boundary defined by the static region 130. Further, in some cases, when the cutting instrument 226 is precisely aligned with the direction of X-ray travel 128, the numerical representation 136 may indicate that zero values associated with both the second and third directions. By way of an IM nailing example, a medical professional can maintain the orientation image 129 illustrated in Fig. 5C while drilling, so as to drill holes having the appropriate orientation at the target locations 126.

[0052] While example embodiments of devices for executing the disclosed techniques are described herein, the underlying concepts can be applied to any computing device, processor, or system capable of communicating and presenting information as described herein. The various techniques described herein can be implemented in connection with hardware or software or, where appropriate, with a combination of both. Thus, the methods and apparatuses

described herein can be implemented, or certain aspects or portions thereof, can take the form of program code (*i.e.*, instructions) embodied in tangible non-transitory storage media, such as floppy diskettes, CD-ROMs, hard drives, or any other machine-readable storage medium (computer-readable storage medium), wherein, when the program code is loaded into and executed by a machine, such as a computer, the machine becomes an apparatus for performing the techniques described herein. In the case of program code execution on programmable computers, the computing device will generally include a processor, a storage medium readable by the processor (including volatile and non-volatile memory and/or storage elements), at least one input device, and at least one output device, for instance a display. The display can be configured to display visual information. For instance, the displayed visual information can include fluoroscopic data such as X-ray images, fluoroscopic images, orientation screens, or computer-generated visual representations.

[0053] The program(s) can be implemented in assembly or machine language, if desired. The language can be a compiled or interpreted language, and combined with hardware implementations.

[0054] The techniques described herein also can be practiced via communications embodied in the form of program code that is transmitted over some transmission medium, such as over electrical wiring or cabling, through fiber optics, or via any other form of transmission. When implemented on a general-purpose processor, the program code combines with the processor to provide a unique apparatus that operates to invoke the functionality described herein. Additionally, any storage techniques used in connection with the techniques described herein can invariably be a combination of hardware and software.

[0055] While the techniques described herein can be implemented and have been described in connection with the various embodiments of the various figures, it is to be understood that other similar embodiments can be used or modifications and additions can be made to the described embodiments without deviating therefrom. For example, it should be appreciated that the steps disclosed above can be performed in the order set forth above, or in any other order as desired. Further, one skilled in the art will recognize that the techniques described in the present application may apply to any environment, whether wired or wireless, and may be applied to any number of such devices connected via a communications network and interacting across the network. Therefore, the techniques described herein should not be limited to any single embodiment, but rather should be construed in breadth and scope in accordance with the appended claims.

What is Claimed:

1. A surgical instrument assembly comprising:

a processor;

a surgical instrument configured to operate on an anatomical structure;

a display coupled to the processor and attached to the surgical instrument, the display configured to display fluoroscopic data of the anatomical structure, the fluoroscopic data generated by an imaging device; and

a memory in communication with the processor, the memory having stored therein instructions that, upon execution by the processor, cause the surgical instrument assembly to receive the fluoroscopic data in real-time from the imaging device.

2. The surgical instrument assembly as recited in claim 1, wherein the surgical instrument comprises a proximal end and a working end opposite the proximal end, wherein the working end is configured to operate on the anatomical structure, and the display is positioned so as to provide a line of sight to both the working end and the display from a location proximal of the surgical instrument.

3. The surgical instrument assembly as recited in claim 1, wherein the surgical instrument comprises a cutting instrument having a cutting tip configured to remove anatomical material from a target location of the anatomical structure, and the display is configured to display a position of the cutting tip relative to the target location on the fluoroscopic data of the anatomical structure.

4. The surgical instrument assembly as recited in claim 3, wherein the display is further configured to provide a visual indication of an alignment of the cutting instrument with respect to a direction of X-ray travel from an X-ray transmitter of the imaging device to an X-ray receiver of the imaging device.

5. The surgical instrument assembly as recited in claim 4, wherein the visual indication of the alignment is based on the direction of X-ray travel, and is further based on accelerometer information that corresponds to an orientation of the cutting instrument.

6. The surgical instrument assembly as recited in claim 5, wherein the surgical instrument assembly further comprises a computing device mounted to the surgical instrument, the computing device comprising the processor, display, memory, and an accelerometer configured to generate the accelerometer information, the accelerometer information further corresponding to an orientation of the computing device.

7. The surgical instrument assembly as recited in claim 1, the memory having further stored therein instructions that, upon execution by the processor, cause the surgical instrument assembly to display an indication of error on the display when a quality of a communication link between the imaging device and the surgical instrument assembly is below a predetermined threshold.

8. The surgical instrument assembly as recited in claim 1, the memory having further stored therein instructions that, upon execution by the processor, cause the surgical instrument assembly to rotate the displayed fluoroscopic data on the display to a rotated orientation such that a vertical direction on the display corresponds with a vertical direction of movement of the surgical instrument relative to the anatomical structure.

9. The surgical instrument assembly as recited in claim 8, wherein the imaging device is further in communication with an imaging device display separate from the display that is coupled to the surgical instrument, and the fluoroscopic data in the rotated orientation are rotated as compared to fluoroscopic data displayed on the imaging device display.

10. The surgical instrument assembly as recited in claim 1, wherein the surgical instrument is a drill having a drill bit, and the surgical instrument assembly further comprises an alignment tool that is attached to the surgical instrument and is configured to register with a surface of the medical imaging device that has a predetermined orientation so as to align the drill bit with a direction of X-ray travel from an X-ray transmitter of the imaging device to an X-ray receiver of the imaging device.

11. The surgical instrument assembly as recited in claim 10, wherein the alignment tool defines a flat surface configured to abut the surface of the medical imaging device when the drill bit is aligned with the direction of X-ray travel, and the flat surface defines a plane such that the drill bit is oriented perpendicularly to the plane.

12. The surgical instrument assembly as recited in claim 1, wherein the memory has further instructions stored therein that, upon execution by the processor, cause the surgical instrument assembly to receive the fluoroscopic data from the imaging device via a wireless communications channel.

13. A method comprising the steps of:

calibrating an accelerometer of a surgical instrument assembly with a direction of X-ray travel from an X-ray generator to an X-ray receiver of a medical imaging device, the surgical instrument assembly comprising a drill having a drill bit;

displaying an X-ray image of an anatomical structure generated by the medical imaging device, the X-ray image including a target location;

positioning a tip of the drill bit on the anatomical structure;

displaying a representation of a position of the tip of the drill bit with the target location; and

displaying an orientation image that includes a static region and a movable indicator that is representative of an orientation of the drill bit, wherein the drill is oriented with the direction of X-ray travel when the movable indicator has a predetermined spatial relationship to the static region.

14. The method as recited claim 13, the method further comprising:

drilling a hole in the anatomical structure while 1) the tip of the drill bit is aligned with the target location, and 2) the movable indicator has the predetermined spatial relationship to the static region.

15. The method as recited in claim 14, wherein the drill bit is oriented with the direction of X-ray travel when the movable indicator overlies the static region.

16. The method as recited in claim 14, wherein the drill is oriented with the direction of X-ray travel when the movable indicator is within a boundary defined by the static region.

17. The method as recited in claim 13, the method further comprising:

setting a zero value when the drill bit is oriented along the direction of X-ray travel.

18. The method as recited in claim 17, wherein the surgical instrument assembly comprises an alignment tool defining a flat surface, and the X-ray generator defines a flat surface, the method further comprising:

setting the zero value when the flat surface of the alignment tool abuts the flat surface of the X-ray generator.

19. A method comprising the steps of:

receiving, via a wireless communications channel, a plurality of fluoroscopic images generated by a medical imaging device;

displaying, by a display attached to a surgical instrument having a cutting instrument, the plurality of fluoroscopic images;

displaying, by the display, an orientation image that includes a static region and a movable indicator that is representative of an orientation of the cutting instrument;

as the orientation of the cutting instrument moves away from a zero value, moving the moveable indicator away from the static region; and

when the cutting instrument is oriented in accordance with the zero value, positioning the moveable indicator within a boundary defined by the static region.

20. The method as recited in claim 19, wherein the zero value represents an orientation defined by an X-ray generator and an X-ray receiver that generates the plurality of x-ray images, the method further comprising, adjusting the zero value in accordance with a change in the orientation defined by the X-ray generator and the X-ray receiver.

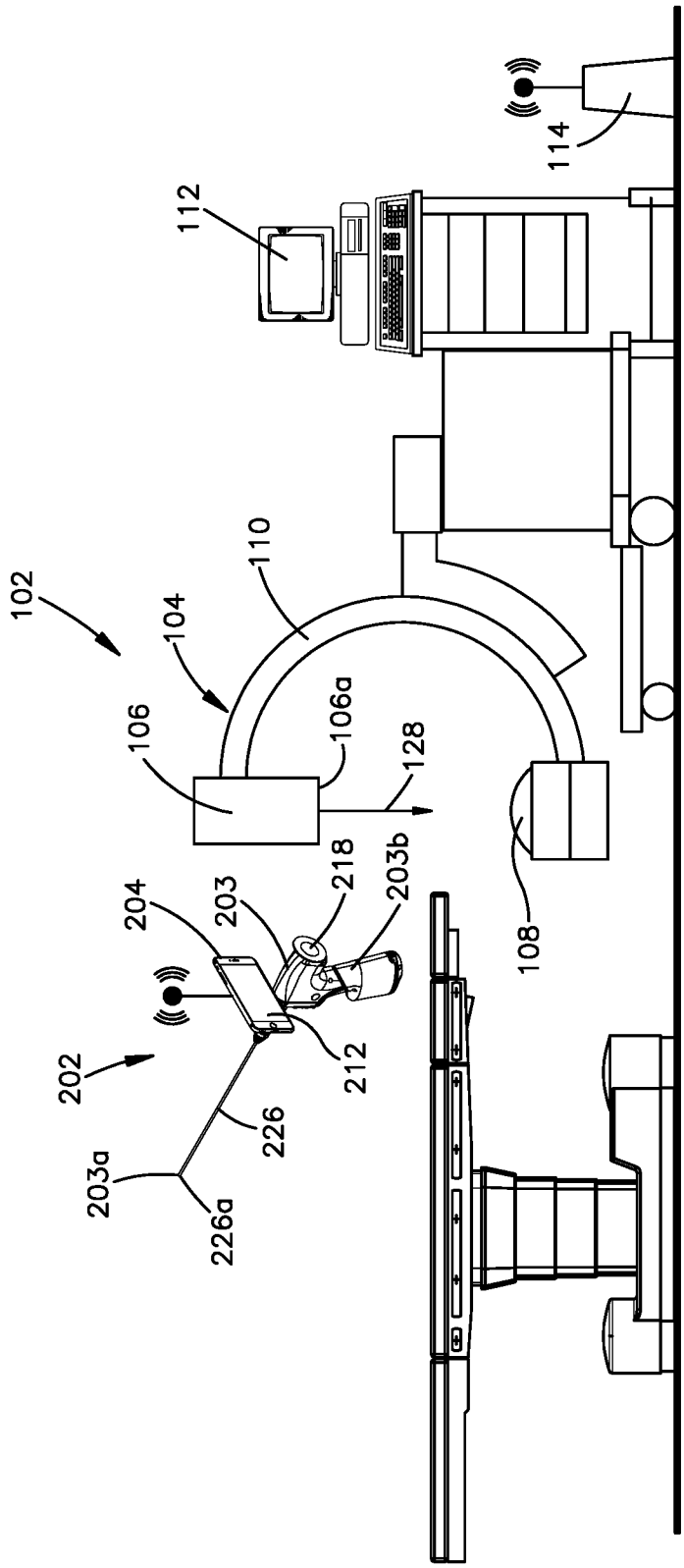
114
112
110
102
104
106
106a
128
108
218
203b
204
203
212
202
226
203a
226a

Fig.1

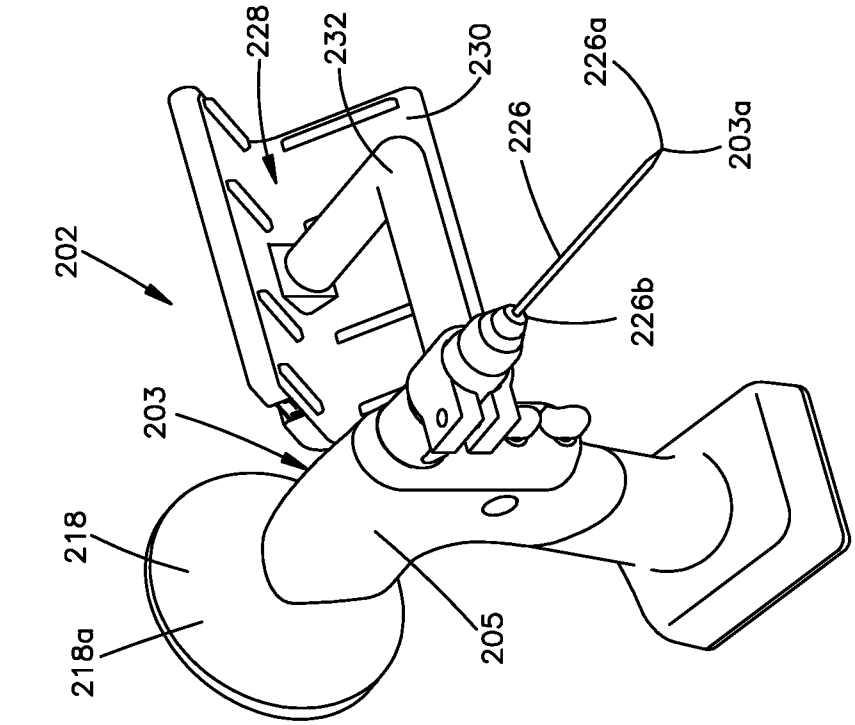
228
232
230
226a
226
203a
202
226b
203
218
218a
205

Fig.2B

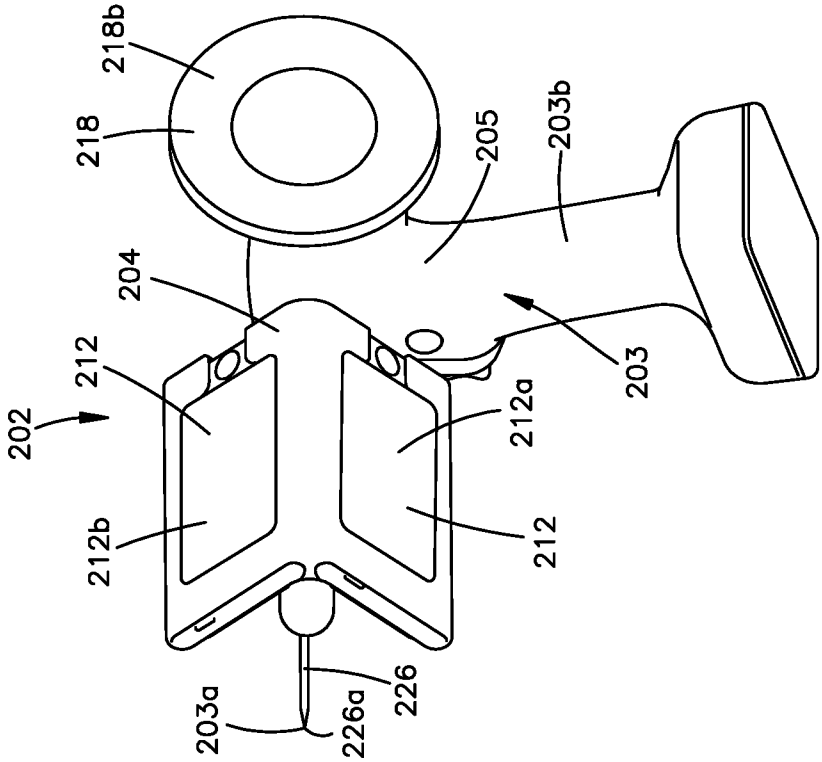
218b
218
205
203b
204
212
203
202
212a
212b
212
203a
226a
226

Fig.2A

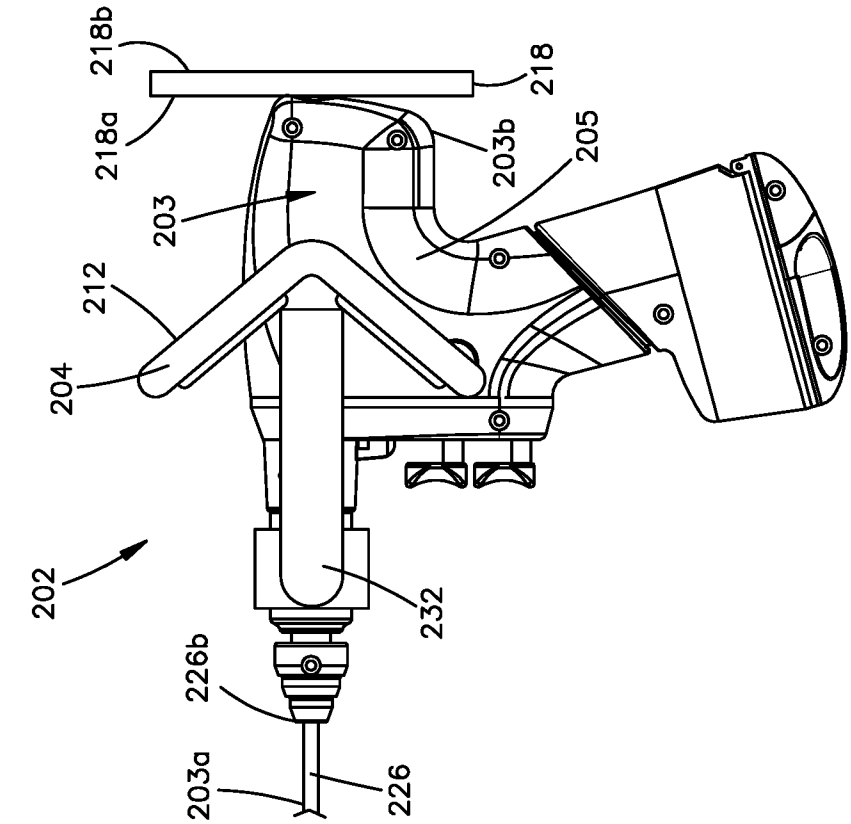
218b
218a
218
203b
205
203
212
204
202
232
226b
203a
226

Fig.2D

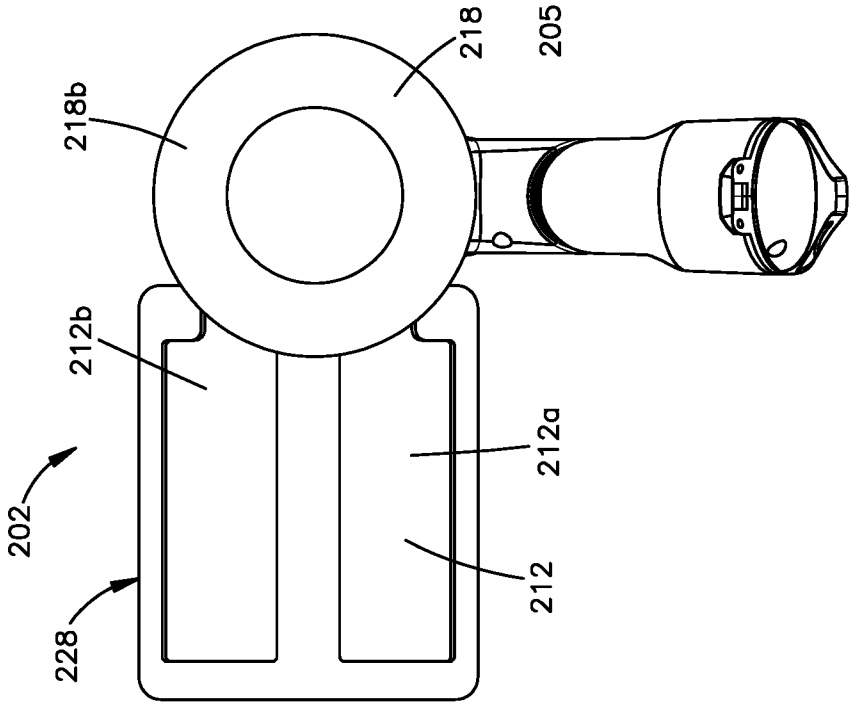
218
205
218b
212b
212a
202
212
228

Fig.2C

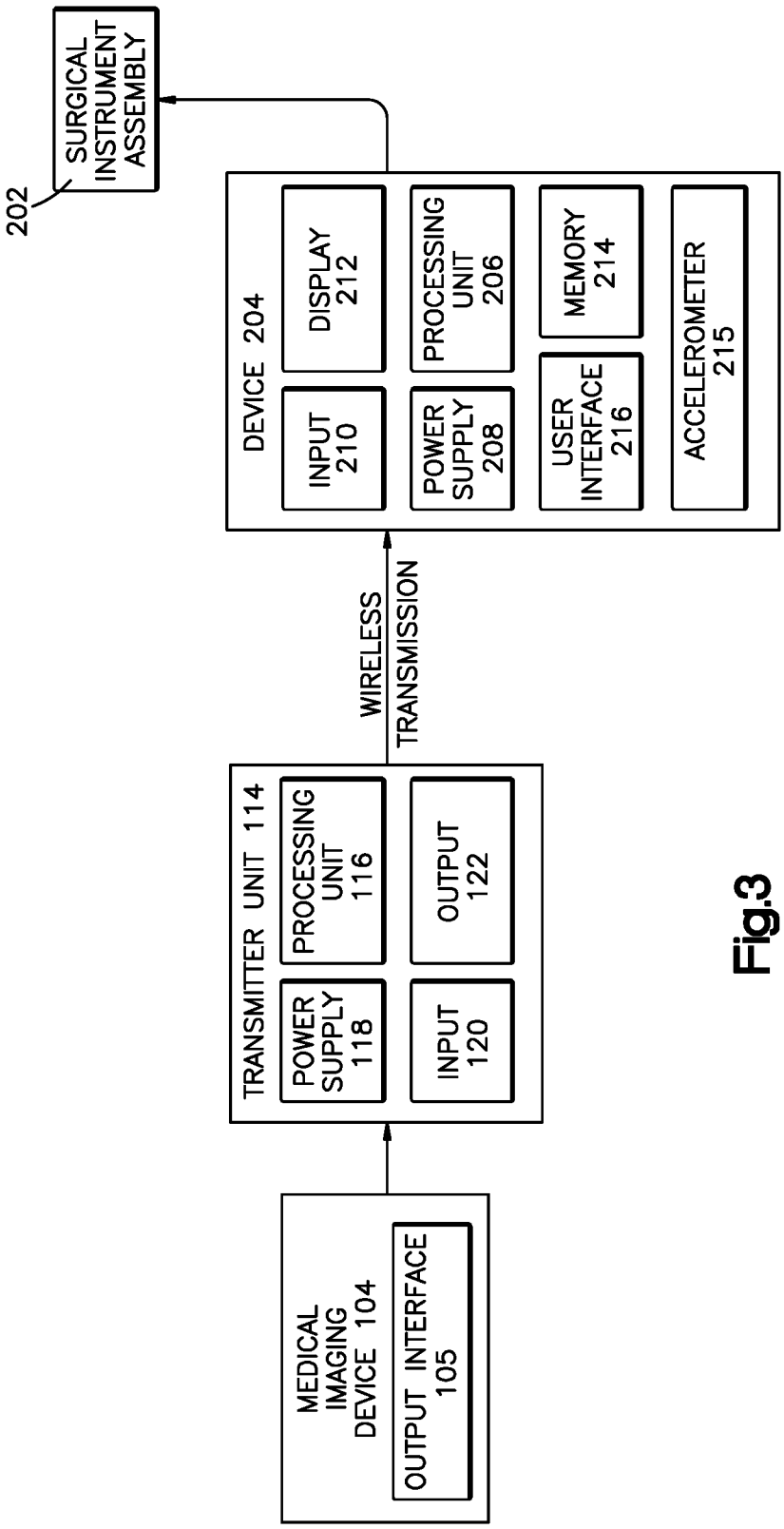
SURGICAL INSTRUMENT ASSEMBLY
202
DEVICE 204
DISPLAY 212
PROCESSING UNIT 206
MEMORY 214
INPUT 210
POWER SUPPLY 208
USER INTERFACE 216
ACCELEROMETER 215
WIRELESS TRANSMISSION
TRANSMITTER UNIT 114
PROCESSING UNIT 116
OUTPUT 122
POWER SUPPLY 118
INPUT 120
MEDICAL IMAGING DEVICE 104
OUTPUT INTERFACE 105

Fig.3

Fig.4A

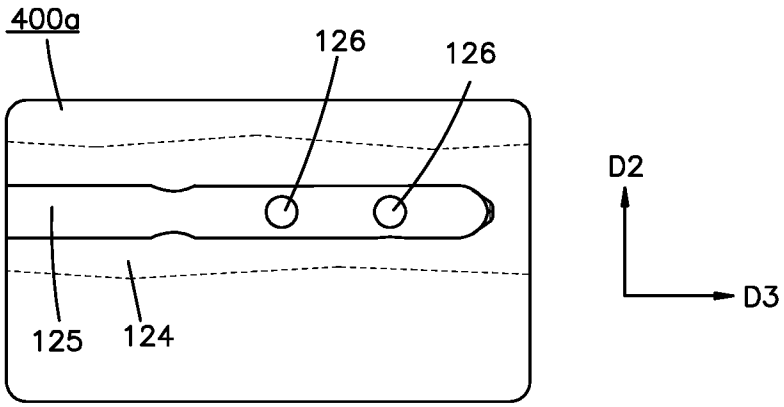

Fig.4B

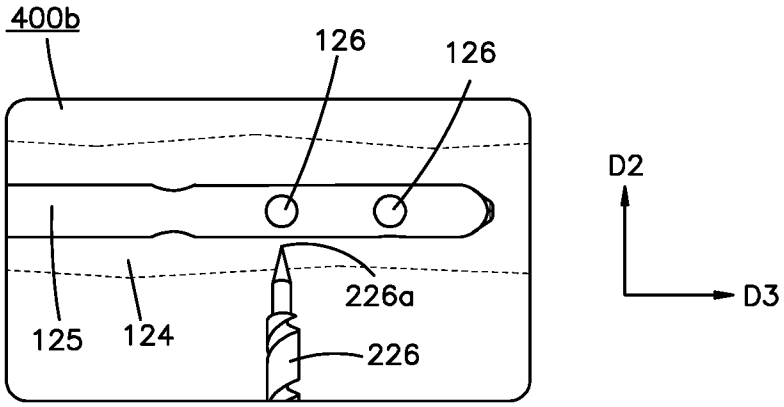

Fig.4C

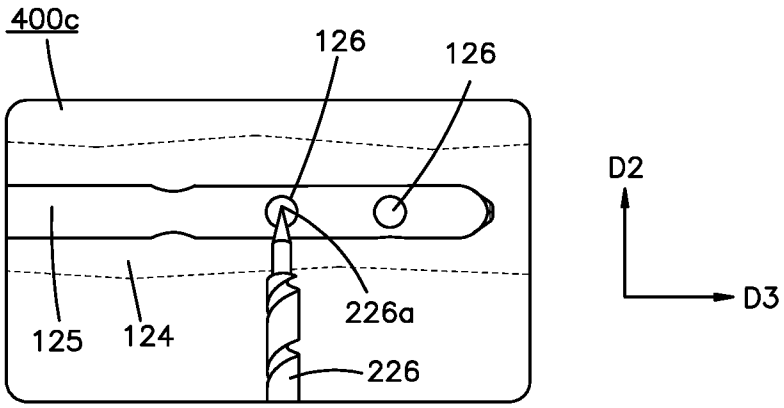

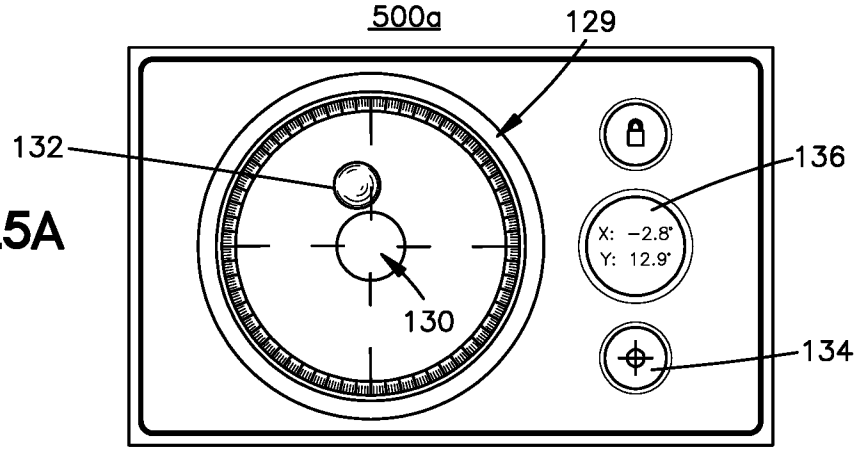

Fig.5A

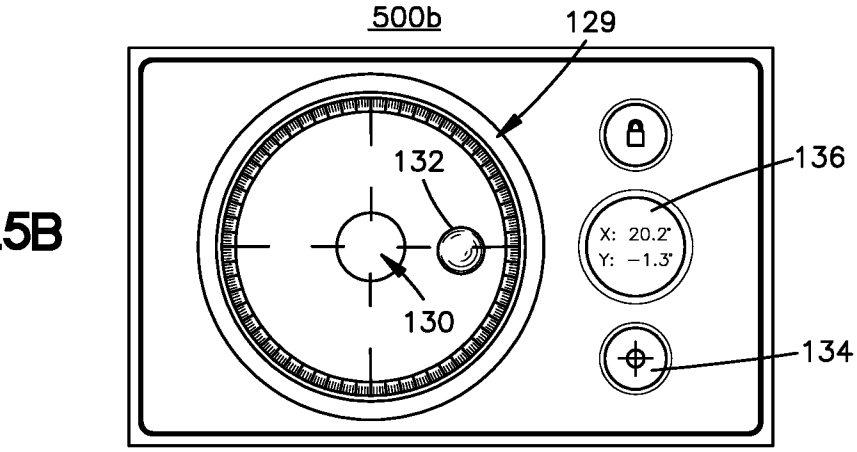

Fig.5B

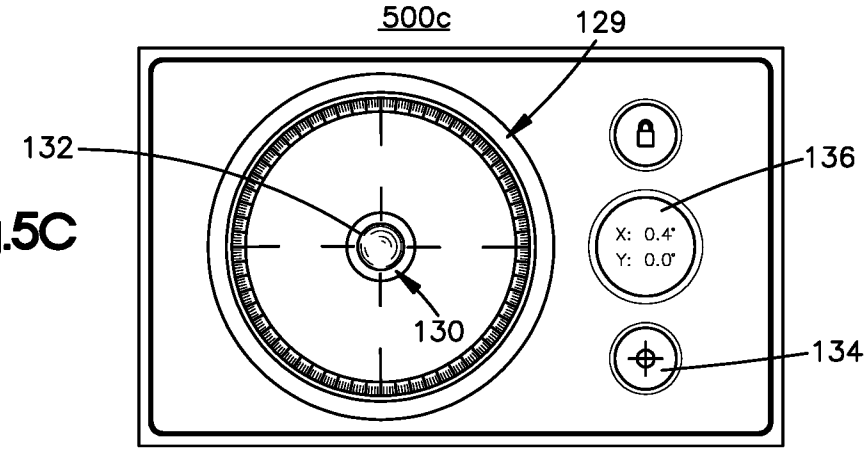

Fig.5C

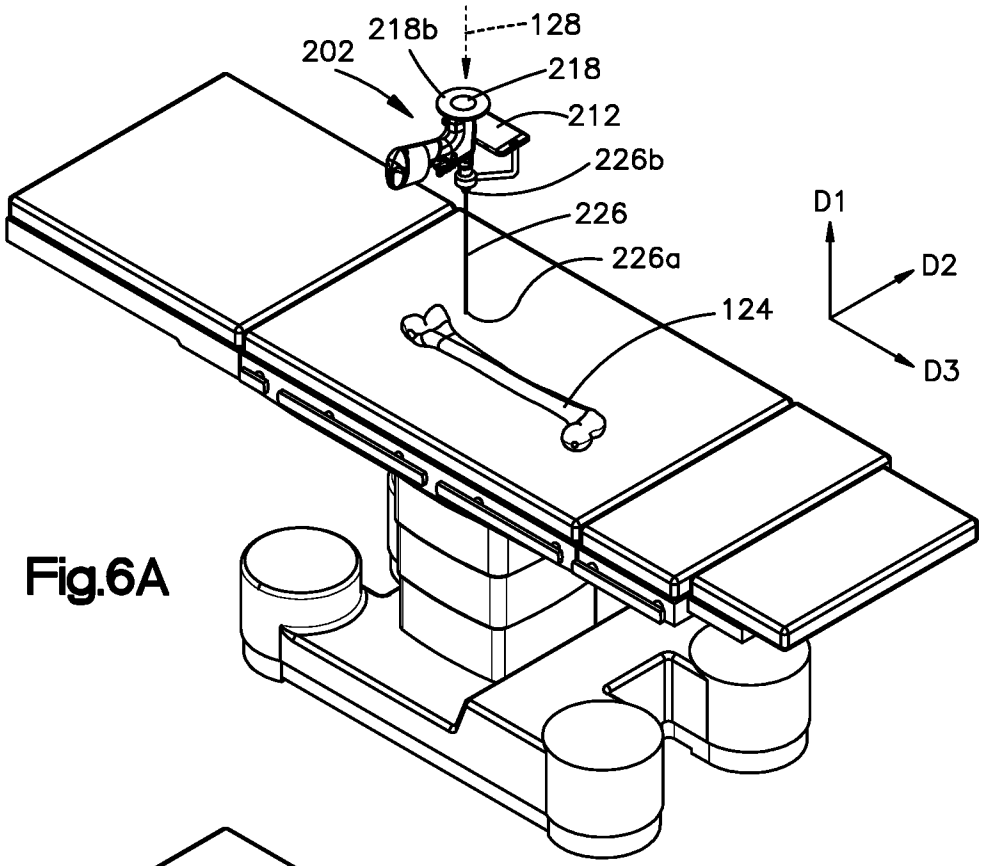
218b
128
202
218
212
226b
226
226a
124
D1
D2
D3

Fig.6A

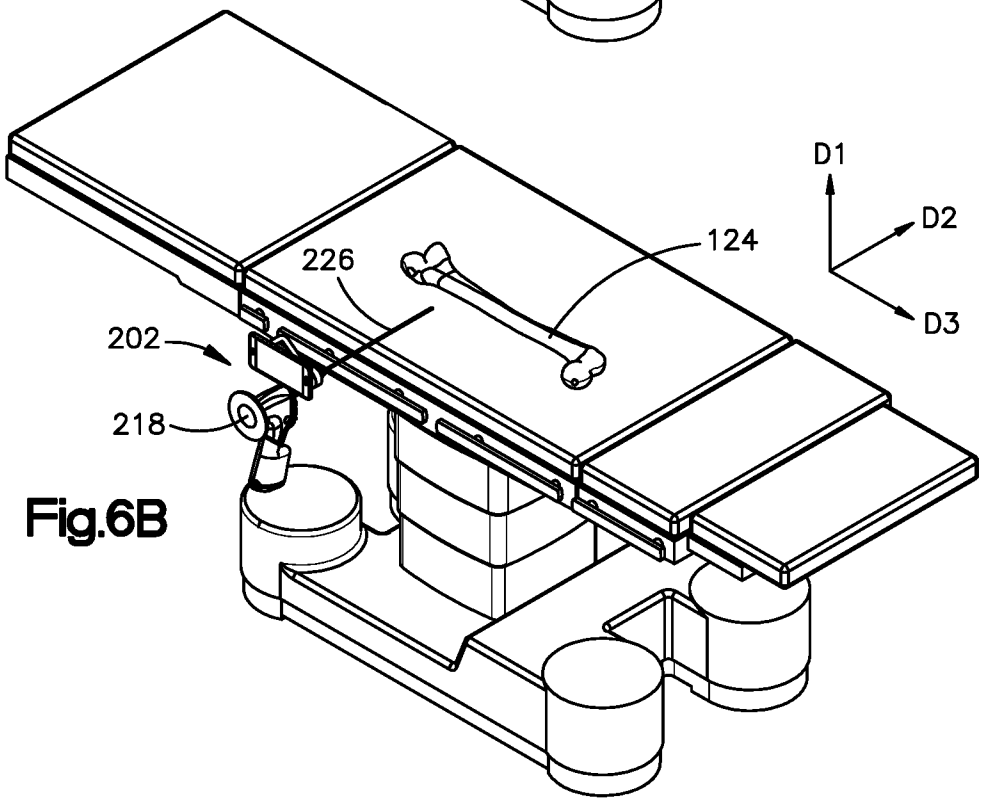
D1
D2
124
226
D3
202
218

Fig.6B