No. 696,063. Patented Mar. 25, 1902.

J. F. MEIGS & S. A. S. HAMMAR.

BREECH LOADING GUN.

(Application filed Sept. 2, 1899.)

(No Model.) 7 Sheets—Sheet 1.

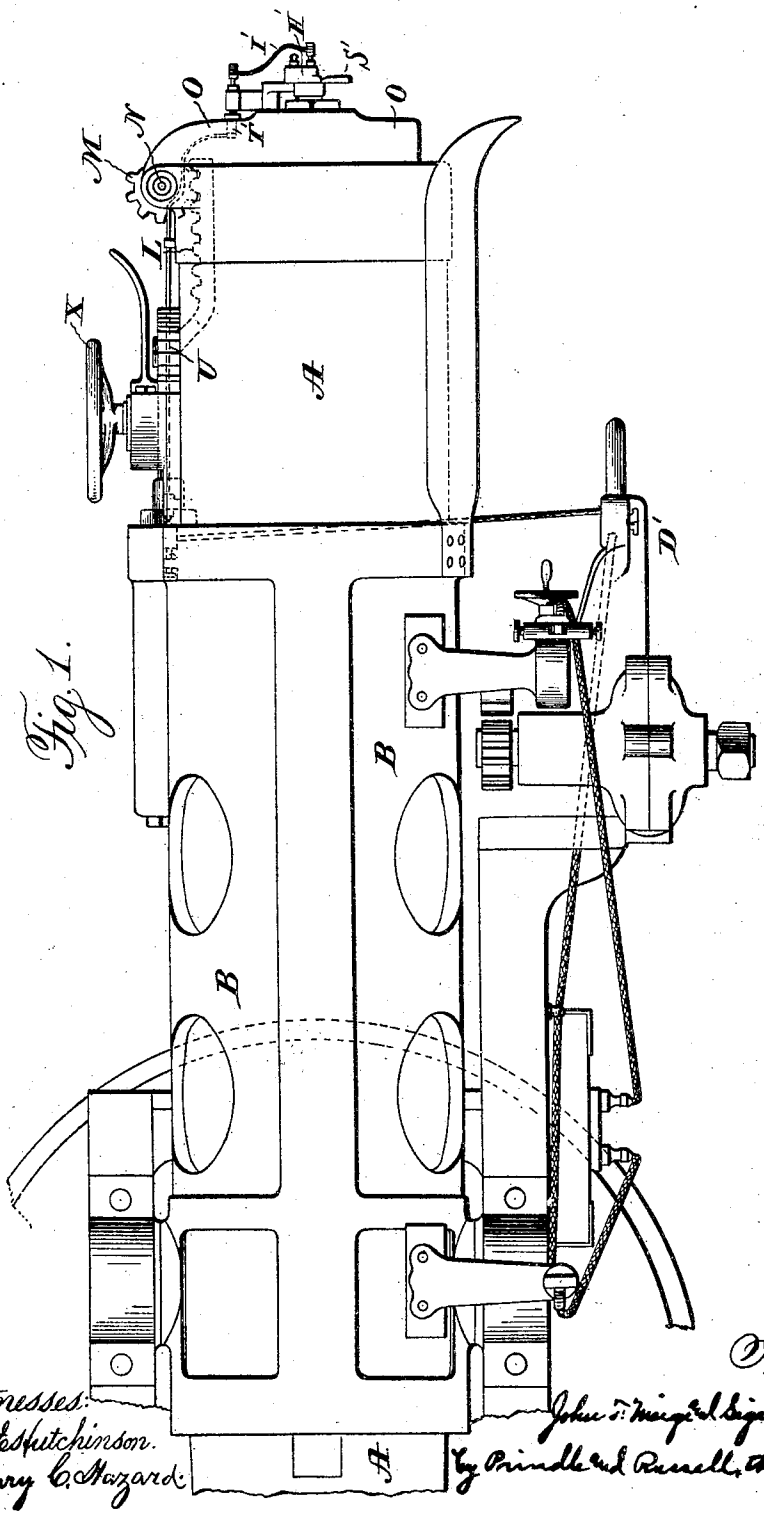

Fig. 1.

Witnesses:
Jas. E. Hutchinson.
Henry C. Hazard.

Inventors.
John F. Meigs and Sigurd A. Stenhammer,
by Prindle and Russell, their Attorneys.

THE NORRIS PETERS CO., PHOTO-LITHO., WASHINGTON, D. C.

No. 696,063. Patented Mar. 25, 1902.

J. F. MEIGS & S. A. S. HAMMAR.

BREECH LOADING GUN.

(Application filed Sept. 2, 1899.)

(No Model.) 7 Sheets—Sheet 2.

Fig. 2.

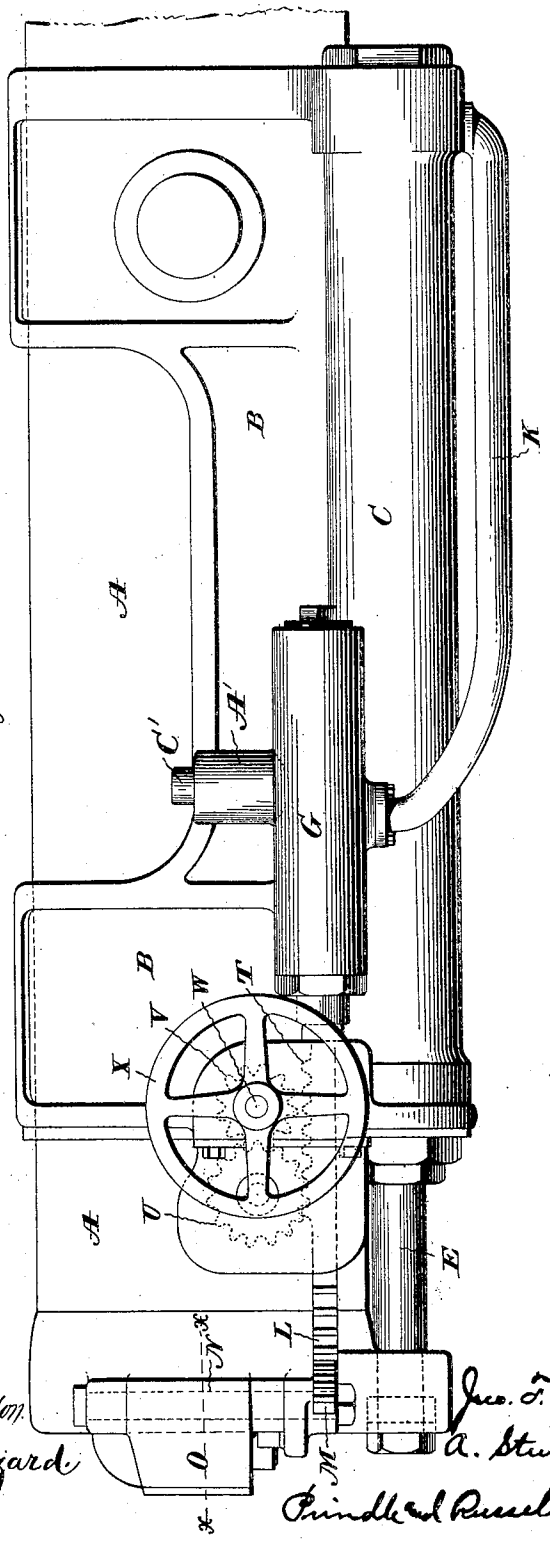

Witnesses:
Jas. E. Hutchinson.
Henry C. Hazard.

Inventors.
Jno. F. Meigs and Sigard
A. Stin Hammar, by
Prindle and Russell their Attys.

THE NORRIS PETERS CO., PHOTO-LITHO., WASHINGTON, D. C.

No. 696,063. Patented Mar. 25, 1902.

J. F. MEIGS & S. A. S. HAMMAR.

BREECH LOADING GUN.

(Application filed Sept. 2, 1899.)

(No Model.) 7 Sheets—Sheet 3.

Fig. 3.

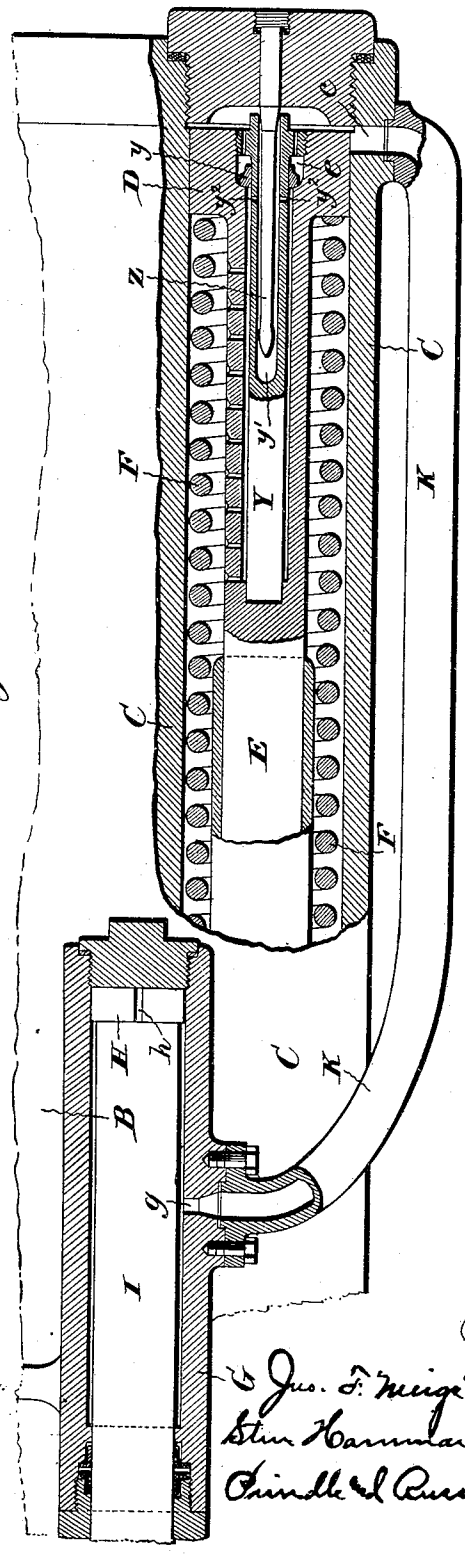

Witnesses:
Jas. E. Hutchinson.
Henry C. Hazard

Inventors:
J. F. Meigs and S. A. S. Hammar, by
Dindle & Russell their Attys

THE NORRIS PETERS CO., PHOTO-LITHO., WASHINGTON, D. C.

No. 696,063. Patented Mar. 25, 1902.

J. F. MEIGS & S. A. S. HAMMAR.

BREECH LOADING GUN.

(Application filed Sept. 2, 1899.)

(No Model.) 7 Sheets—Sheet 4.

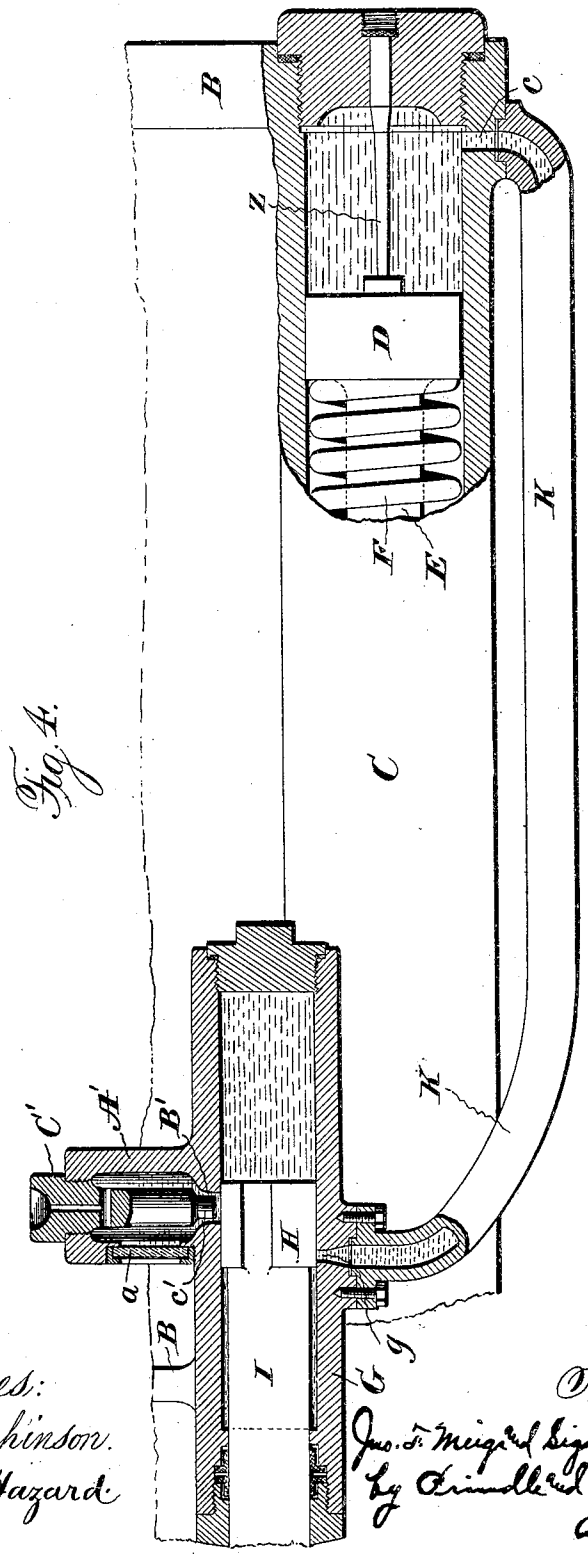

Fig. 4.

Witnesses:
Jas. E. Hutchinson.
Henry C. Hazard.

Inventors.
Jno. F. Meigs and Sigurd A. Stu Hammar,
by Brindle and Russell, their
attys.

THE NORRIS PETERS CO., PHOTO-LITHO., WASHINGTON, D. C.

No. 696,063. Patented Mar. 25, 1902.

J. F. MEIGS & S. A. S. HAMMAR.

BREECH LOADING GUN.

(Application filed Sept. 2, 1899.)

(No Model.) 7 Sheets—Sheet 5.

Fig. 5.

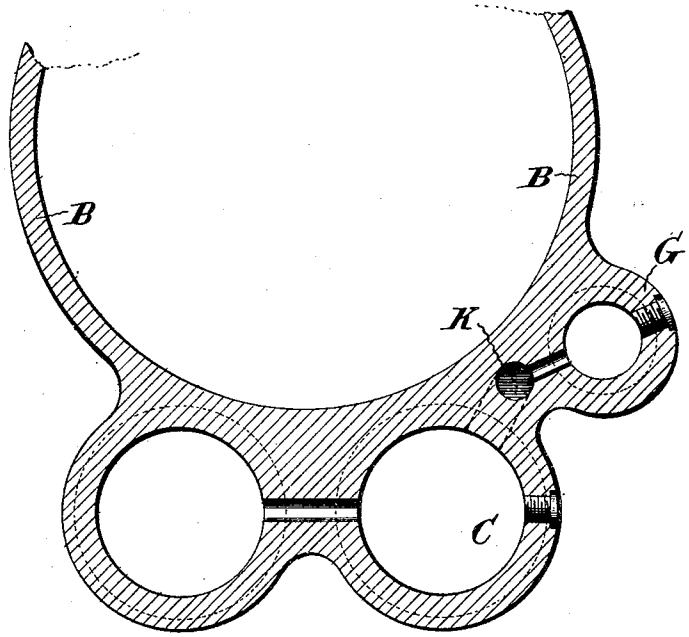

Witnesses:
Jas. E. Hutchinson.
Henry C. Hazard.

Inventors.
John F. Meigs and Sigard A. Ste. Hammar
by Crandall & Russell, their Attorneys

THE NORRIS PETERS CO., PHOTO-LITHO., WASHINGTON, D. C.

No. 696,063. Patented Mar. 25, 1902.

J. F. MEIGS & S. A. S. HAMMAR.

BREECH LOADING GUN.

(Application filed Sept. 2, 1899.)

(No Model.) 7 Sheets—Sheet 6.

Fig. 6.

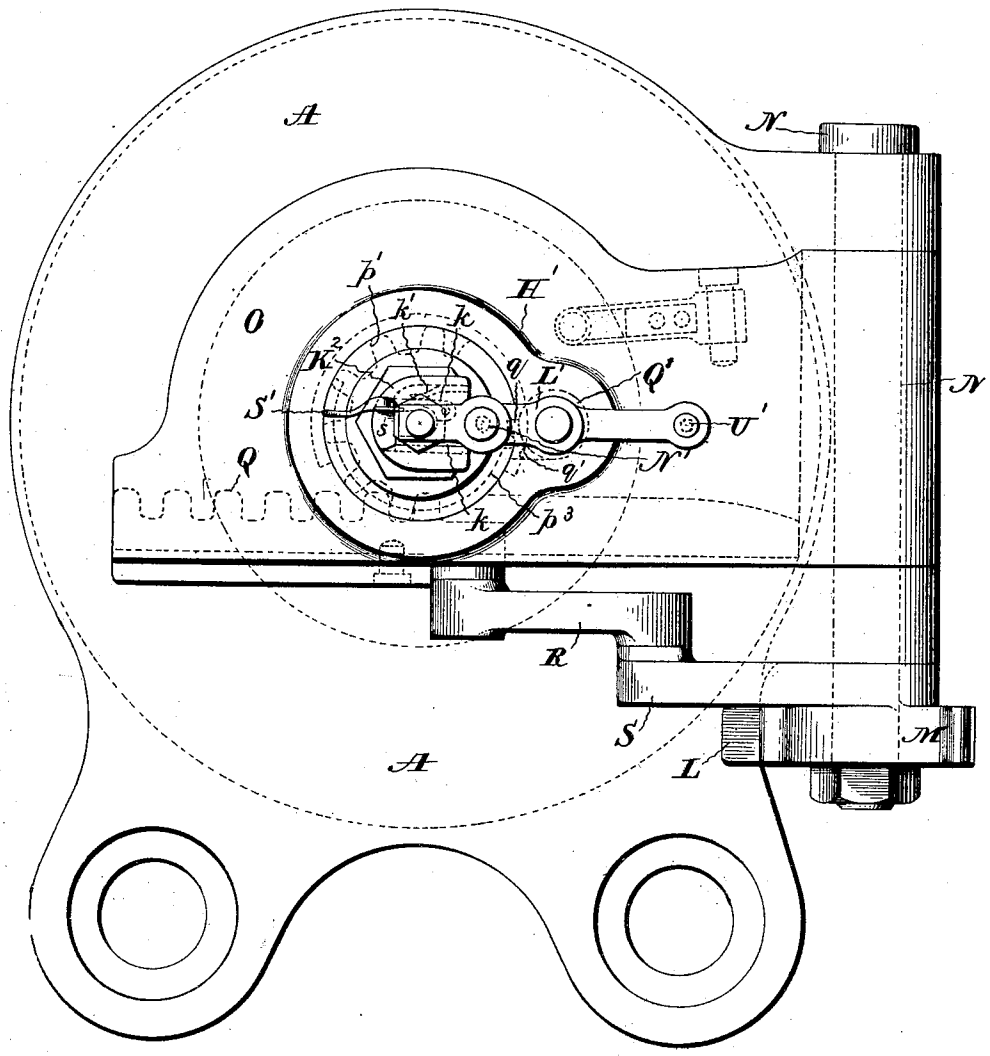

Witnesses:
Jas. E. Hutchinson.
Henry C. Hazard

Inventors.
Jno. F. Meigs and Sigard A. Stu. Hammar,
by Prindle and Russell, their attys.

THE NORRIS PETERS CO., PHOTO-LITHO., WASHINGTON, D. C.

No. 696,063. Patented Mar. 25, 1902.

J. F. MEIGS & S. A. S. HAMMAR.

BREECH LOADING GUN.

(Application filed Sept. 2, 1899.)

(No Model.) 7 Sheets—Sheet 7.

Fig. 7.

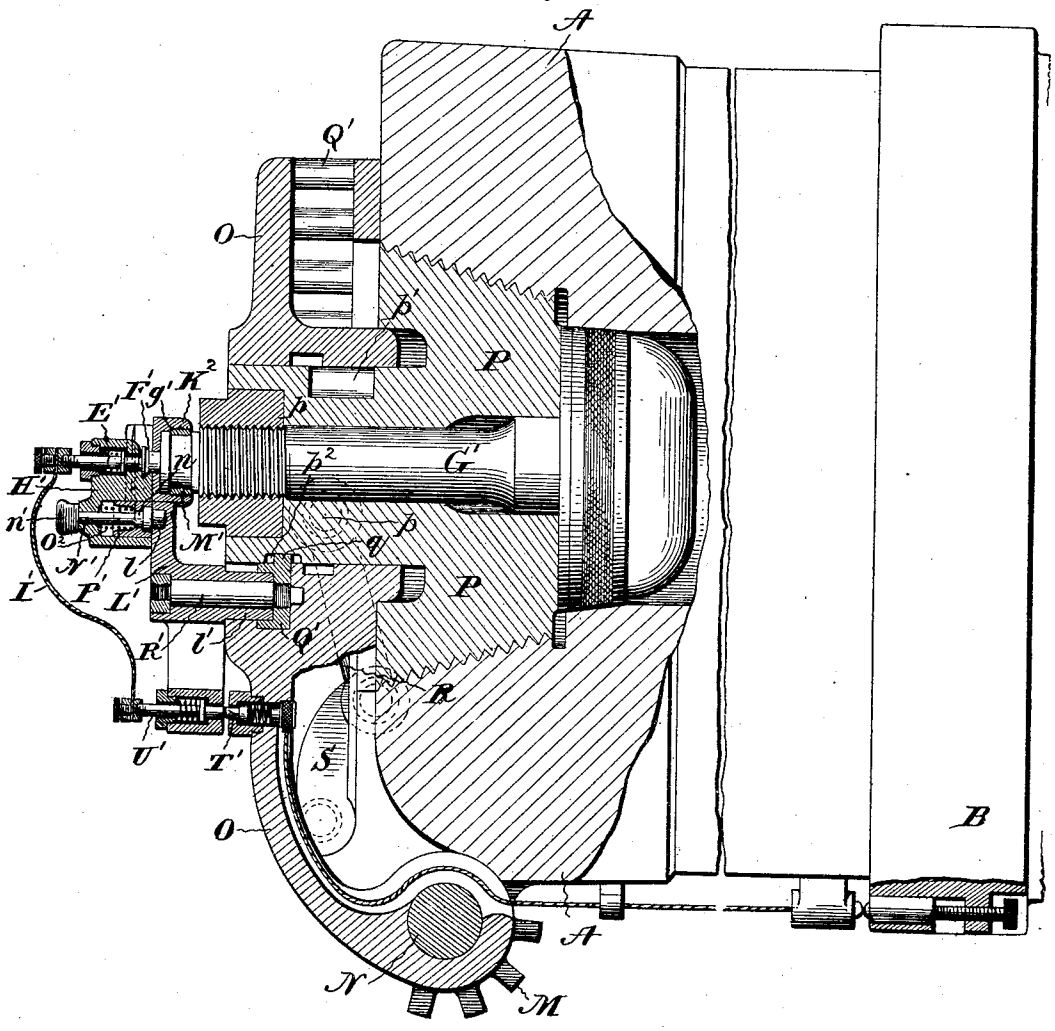

Witnesses:
Jas. E. Hutchinson
Henry C. Hazard.

Inventors.
Jno. F. Meigs & Sigard A. Stu Hammar
by Pindle and Russell their Attys

THE NORRIS PETERS CO., PHOTO-LITHO., WASHINGTON, D. C.

UNITED STATES PATENT OFFICE.

JOHN FORSYTH MEIGS AND SIGARD AXEL STEN HAMMAR, OF SOUTH BETHLEHEM, PENNSYLVANIA, ASSIGNORS TO THE BETHLEHEM STEEL COMPANY, OF SOUTH BETHLEHEM, PENNSYLVANIA.

BREECH-LOADING GUN.

SPECIFICATION forming part of Letters Patent No. 696,063, dated March 25, 1902.

Application filed September 2, 1899. Serial No. 729,353. (No model.)

To all whom it may concern:

Be it known that we, JOHN FORSYTH MEIGS and SIGARD AXEL STEN HAMMAR, of South Bethlehem, in the county of Northampton, and in the State of Pennsylvania, have invented certain new and useful Improvements in Breech-Loading Guns; and we do hereby declare that the following is a full, clear, and exact description thereof, reference being had to the accompanying drawings, in which—

Figure 1 is a top plan view of enough of a gun and its mount to illustrate an embodiment of our invention. Fig. 2 is a view in side elevation. Fig. 3 is a view, partly in elevation and partly in section, of the recoil and operating cylinders and contained devices, showing the position of parts when the breech is closed and the gun is in battery. Fig. 4 is a similar view with the parts in full lines in the position during counter-recoil at the instant the operating-cylinder piston is about to cause the opening of the breech. Fig. 5 is a view showing the recoil and operating cylinders in communication by a passage through the sleeve. Fig. 6 is an end view of the gun, showing the breech mechanism; and Fig. 7 is a horizontal section on the line $x\,x$ of Fig. 4.

The object of our invention is to provide improvements in the construction of breech-loading guns of the class in which the force of recoil is utilized to operate the breech mechanism; and to this end said invention consists in the features of construction substantially as hereinafter claimed.

In the embodiment of our invention which we have selected for illustration the gun body or barrel A is supported in a sleeve B, which, as usual, forms a part of the stationary or non-recoiling mount and in which the barrel is free to reciprocate longitudinally and having on its under side two recoil-cylinders, but one of which, C, is shown. In the latter is the piston D, whose rearwardly-extending rod E is secured to the gun-barrel at its rear end, and encircling the rod within the cylinder is a heavy helical spring F, whose ends bear, respectively, against the piston and the rear end of the cylinder. On the side of the sleeve B, at a point a little higher than the recoil-cylinder, is a cylinder G, containing a piston H, the piston-rod I of which extends rearward. A pipe K, extending from a port c at the front end of the recoil-cylinder C to a port g at the mid-length of the operating-cylinder G, provides means for the passage of fluid from one cylinder to the other.

The piston-rod I has attached to or carries at its rear end a rack L, that meshes with a pinion-segment M, mounted at the lower end of the hinge pin or bolt N of the arm or bracket O, which carries the breech screw or block P. The latter is preferably of conical or tapering form and provided with full or continuous thread. We use this construction of breech-block because of its strength, for with its full thread it has twice the threaded area of a block of the interrupted-screw type of the same length and mean diameter. In the latter case, too, the threads are not as strong at the ends as in their middle portions, and hence there is on this account an advantage in strength with the full thread. Said block has a shank or stem p on its rear end, by which it is journaled and supported in a bearing in the arm or bracket O.

Meshing with a segmental series of gear-teeth p' on the stem p is a rack-bar Q, that extends crosswise of the gun in guideways in the arm or bracket O and is connected by a link R with a curved crank-arm S, carried by the pinion-segment M. When the breech is closed, the two pivot-pins connecting the rack-bar Q, link R, and crank-arm S and the hinge-pin N are all in the same straight line, and hence the breech-block cannot possibly accidentally open during firing. Yet though making a very strong lock the crank and link device can easily exert ample force for opening the breech when operated in their normal intended way.

Intermediate the rack L and the operating-cylinder G is a second rack T, with which meshes an idler-gear U, journaled in a bearing fastened to the gun-barrel, and meshing with said idler is a gear V upon a shaft W, that is journaled in bearings on the non-recoiling sleeve B, said gear V being in front of the gear U. Upon the shaft W is fixed a hand-wheel X, by which the shaft may be revolved, and thus power transmitted through the gears to the rack-bar. The operating-shaft W being on a non-recoiling part of the gun and in

front of the gear U, which is carried by the gun-barrel, it follows that upon the recoil of the latter the gear U will be carried rearward out of engagement with the gear V with absolutely no danger to the operator from the recoil, notwithstanding he has hold of the hand-wheel at the time of recoil.

It will be seen that when the gun recoils from firing the two pistons D and H will move rearward in their respective cylinders, the fluid in the recoil-cylinder, as usual, passing through passages to the front side of its piston H. As there is no relative movement of the rack L and segment M, these two will move rearward together and the breech-block be kept closed during recoil. A pressure tending to keep the breech mechanism closed during recoil is created by the rearward travel of the piston through the cylinder, the fluid behind the piston being slowly passed to the front thereof through the constricted passage *h* in the periphery of the piston H. Even should any parts break inertia would tend to keep the breech closed during recoil. As we thus insure the keeping of the breech closed against accidental opening during firing, danger from this source is obviated. As a partial vacuum exists in each of the cylinders on the completion of the rearward movement of the pistons from the recoil, it follows that on the return movement or counter-recoil the pistons travel forward some distance before they encounter resistance from the fluid in their cylinders. The piston H thus moves forward to a point barely beyond the port *g*, whereupon, by reason of a pressure upon its front side produced by the fluid entering through the port *g* and the passage *h*, it is moved rearward until it covers the port *g* and cutting off the entrance of fluid stops in its movement relative to the cylinder G. The latter being a part of the non-recoiling portion of the gun, it follows that as the piston is thus held stationary the continued forward travel of the gun-barrel causes the revolution of the segment M by the teeth of the rack L and effects, first, the revolution of the breech-block to unscrew it, and then its swinging around with the arm or bracket to open the breech for the insertion of the charge, the arm or bracket being swung when the rack Q is stopped in its longitudinal travel by contact with the arm or bracket. Counter-recoil being completed, the engagement or meshing of the gears U and V is restored, and the charge having been placed in the gun the hand-wheel X is revolved to close the breech, the rack M being moved forward to cause the swinging of the arm or bracket to place the block in the gun, and then the revolving of the block to screw it home. The piston H is of course moved forward, the fluid in front of it being passed through the passage *h* to the rear of it and that which cannot be contained in the space around the rod I passing out through the port *g*.

It is to be observed that though the breech mechanism is opened automatically, yet as there is instantaneous disengagement of the connection or gearing between such mechanism and the hand-wheel the man whose duty it is to close the breech need not even move his hand from the said wheel during recoil, so that he can be ready the instant the charge is inserted in the gun to close the breech, and he can do this rapidly, because as the mechanism is at all times absolutely under his control he need not be hindered by fears of hurting the man or men who load the gun. The absence of springs or power-worked mechanism for closing the breech, whose control is not certain, and the use of a completely-controllable mechanism reassures both the ones who load and he who closes the breech, so that the work can be done under the best conditions and with no loss of time. To contribute to rapidity of firing, the automatic opening of the breech is effected in the shortest advisable time and the closing by hand is accomplished as rapidly as is desirable.

Our mechanism in its entirety is very simple; but it is especially simple in respect to the means for automatically opening the breech. Such means are free from springs, valves, and accumulators and are independent of leakage and expansion of the fluid and will accordingly work under any conditions in which the recoil mechanism will work.

For controlling the recoil and counter-recoil or forward motion of the gun we prefer to use the mechanism illustrated, which we will now describe.

The piston-rod E is hollow and provided with numerous radial openings that one after another are closed on the rearward movement of the rod by a closely-fitting sleeve or tube, through which the rod passes. The gradual cutting off of the passage of fluid from the cylinder, which this arrangement secures, controls the recoil. Within the piston-rod and also the piston is a rod Y, around which is an annular space and on which near its forward end is a valve *y*, that has a seat in a chamber *e* in the piston, a perforated head or flange on the rod Y being screwed into the outer end of said chamber, the perforations in the head being for the outlet of fluid passing the valve. The rod Y has a central longitudinal passage *y'* reaching inward from its front end, and radial openings y^2 and y^2 place said passage in communication with the annular space around the rod. Thus when the passage *y'* is unobstructed fluid can pass from the cylinder in front of the piston into said annular space, and thence through the perforated wall of the piston-rod E into the cylinder back of the piston. To constrict such passage *y'*, and thus retard the flow of fluid, a rod Z is provided that projects from the front end or head of the recoil-cylinder in line with said passage and has a tapering form, its smaller cross-section being

just in rear of a head y^3, whose cross-section is nearly just the same as the cross-section of the passage. At a proper time in the counter-recoil the entrance of the rod Z into and its travel through the passage y' by the forward movement of the piston will gradually diminish the fluid capacity of said passage, and thus regulate the flow of fluid through the same. By the regulation of the counter-recoil the speed of opening the breech is determined, and said regulation may be such that at certain points the speed may be reduced to avoid shocks and jars. This may be desirable where there is a change of motion of the block and at its stopping.

The joints in the operating-cylinder are packed to insure the exclusion of air under ordinary conditions of use, the structure being complete, as shown in Fig. 3; but provision may be made to meet the contingency of air finding its way into said cylinder when there is a partial vacuum therein. This provision may, as shown in Fig. 4, take the form of a chamber or receptacle A′, mounted upon the operating-cylinder—that is, in communication with the interior of the operating-cylinder by a constricted passage. A passage c of small diameter, preferably in a plug C′, screwed into an opening in the top of the chamber A′, puts the latter in communication with the outside air. The operation of the parts when provision is made for discharging the air is as follows: During recoil the piston H, moving rearward, causes, first, the forcing of liquid into the chamber A′; second, the closing of the passage B′ during its travel across the latter, and, third, on the uncovering of said passage when it passes beyond it the drawing of liquid back into the cylinder G. When counter-recoil takes place, the piston H moves forward and causes, first, the expulsion of air through the passage B′ into the chamber A′; second, the closing of the liquid-inlet g when it travels forward to a point over said inlet, such closing being effected before any liquid can enter from the recoil-cylinders; third, the opening of said inlet to admit the liquid to fill the partial vacuum in the cylinder and the covering of the passage B′ by the continued forward movement of the piston, and, fourth, the return or backward movement of the piston caused by the liquid, as heretofore described, until the inlet g is again closed, the piston coming to rest at a point where it closes both the inlet g and the passage B′. The clearance of the piston is sufficient to allow passage of air when the passage B′ is closed. A volume of liquid is kept in the chamber in excess of the quantity needed to replenish the possible loss by leakage, and in one of the chamber-walls is a glazed sight-opening a, through which the liquid in the chamber may be seen, and thus its level noted. As the elevation of the chamber is greater than that of any other of the liquid-containing devices it is used as the place from which liquid is supplied, the plug C′ being removed when liquid is to be poured into the apparatus. The passage B′ is formed by a hole of ample area to answer the purpose indicated, and to constrict such hole to the much smaller area required for the purpose of discharging the air the plug C′ has a part c', that partially fills said hole when the plug is in place.

Communication between the recoil and the operating cylinders may be by means of a passage in the form of an external pipe, as shown in Fig. 4; but, preferably, as shown in Fig. 5, a passage K′ is bored in the sleeve B to put said cylinders in communication.

The mechanism for firing the gun is electrical, a manually-operated circuit-closing device D′ being mounted on the side of the gun opposite the breech-closing mechanism and on a non-recoiling part of the gun structure.

There are several (preferably two) safety devices for preventing firing until the breech is closed, each in the form of an automatically-operated circuit opening and closing device. One of them comprises an electrode E′, that coöperates with an electric primer F′, of usual construction, placed in the rear end of the mushroom-stem G′. Said contact E′ is in the form of a pin or bolt, that is slidingly mounted in a block H′ and adapted under the pressure of a spring to bear yieldingly at one end against the end of the primer F′ and at its other end to be connected with the wire or conductor I′. The block H′ is slidingly mounted in guides k and k on the rear face of a collar or cap K^2, swiveled on the protruding end of the stem G′, and it is pivotally connected at one end to a crank-arm L′, pivoted to the carrier O and operated as hereinafter described, by which the block H′ is oscillated and reciprocated to move the electrode E′ into and out of contact with the primer. The cap or collar K^2 is conveniently swiveled to the mushroom-stem by forming in the latter an annular groove g' to receive a ring M′ of slightly-greater diameter than the end of the stem upon which the cap is screwed. The ring M′ is made in halves to enable it to be placed in the annular groove g'. The pivotal connection between the block H′ and the crank-arm L′ is formed by a pin N′ passing through the block and having its inner end engaging a circular recess or socket l in the arm L′, into which said end is yieldingly pressed and held by means of a coiled spring O^2 encircling the pin and bearing at one end against the end of an enlargement of the pin-hole and bearing at its other end against a plunger P′, also around the pin in said enlargement that engages a collar or annular flange n on the pin. It will be apparent that by the just-described connection between the block and the arm the block and the firing devices connected therewith are free to move with the mushroom-stem when the latter moves longitudinally from the effect of firing the gun and that no strain from this source will fall upon the crank-arm

L′. Upon the outer end of the pin N′ is a handle or knob n', by means of which the pin may be drawn out of engagement with the socket in the arm L′, so as to free the block H′ and permit it to be moved in its guides on the cap K^2 independently of the arm to give access to the primer.

The arm L′ has a round portion or hub l', that is journaled in an opening in the carrier O, and fixedly secured to the inner end of said hub is a collar Q′. A pin or bolt R′, passing through the arm and screwed into the collar at one end and having nuts screwed on its other end, the thread at the two ends being reversed, fastens the collar and arm together, and thus secures the arm to the carrier O. On the collar Q′ are two spur-teeth q and q', that are not in alinement either in an axial or circumferential direction, one of which coöperates with a notch p^2 of a size just to receive it in the periphery of the shank or stem p of the breech-plug P, and the other coöperates with a circumferentially-extending groove or channel p^3 in said shank or stem. By the meshing or engagement of the tooth q with its notch p^2 when the plug is revolved to open the breech the arm L′ is turned or swung on its pivot until the tooth passes out of the notch, and then by the engagement of the tooth with the periphery of the stem or shank p the arm is held in the position to which it is moved. The other tooth q' is moved into the groove p^3, and thus does not interfere with the rotation of the arm. When the plug is revolved in the reverse direction to close the breech, as soon as the notch p^2 comes again opposite its tooth q one end of the groove p^3 engages its coöperating tooth q' and the arm is swung back to its former position. It will be seen that by the described movements of the arm L′ the block H′ will be slid in its guides in the cap K^2 and rocked by reason of the swiveled connection of the latter with the stem G, and thus either withdraw the electrode E′ from contact with the primer and expose the latter to permit its removal and the substitution of another or place the electrode E′ in electrical contact with the primer.

The firing mechanism shown and described is not claimed herein, as the same forms the subject of an application, Serial No. 45,756, filed February 2, 1901.

It is to be understood that the scope of our invention as claimed herein is not restricted to any particular construction of firing mechanism; nor is the scope of our invention to be confined to the use of any one form of breech mechanism.

Having thus described our invention, what we claim is—

1. In a breech-loading gun, mounted to recoil, the combination of breech mechanism, means for opening the breech and means for closing the breech comprising two intermeshing gears, one of which is journaled on a recoiling part of the gun, and the other on a non-recoiling part, and an operating device connected to the latter gear, substantially as and for the purpose described.

2. In a breech-loading gun, mounted to recoil, the combination of breech mechanism, means for opening the breech and means for closing the breech comprising two intermeshing gears, one of which is secured to a recoiling part, and the other is secured to a non-recoiling part, and a hand-operated device connected to the latter gear, substantially as and for the purpose described.

3. In a breech-loading gun, mounted to recoil, the combination of a breech-block, a rack, connections between the latter and the block, means for automatically moving the rack to open the breech, and hand-operated gearing in mesh with the rack, said gearing comprising two wheels mounted, respectively, on relatively fixed and movable parts of the gun, substantially as and for the purpose described.

4. In a breech-loading gun mounted to recoil, the combination of breech mechanism, means for operating the latter comprising a cylinder and piston, a recoil cylinder and piston, relative movement of which, from recoil, is in a direction to increase the cubic contents of the part of the cylinder into which fluid is forced by the recoil, and a passage connecting the two cylinders, substantially as and for the purpose described.

5. In a breech-loading gun mounted to recoil, the combination of breech mechanism, means for operating the latter comprising a cylinder and piston, means for causing relative movement of cylinder and piston by the recoil and counter-recoil of the gun, a recoil cylinder and piston, and a passage connecting the two cylinders that communicates with the operating-cylinder at a point intermediate the limits of travel of the piston therein, substantially as described.

6. In a breech-loading gun mounted to recoil, the combination of breech mechanism, means for operating the latter comprising a cylinder and piston, means connecting the piston and gun, whereby the latter may partake of the movements of the gun from recoil and counter-recoil, a recoil cylinder and piston, and a passage connecting the two cylinders that communicates with the operating-cylinder at a point intermediate the limits of travel of the piston therein, substantially as described.

7. In a breech-loading gun, mounted to recoil, the combination of breech mechanism, means for operating the latter comprising a cylinder and piston, a recoil-cylinder, a piston therein, and a passage that establishes communication between the recoil-cylinder at a point from which the piston moves under recoil, and the operating-cylinder at a point intermediate the limits of travel of the operating-piston, substantially as and for the purpose described.

8. In a breech-loading gun, mounted to recoil, the combination of breech mechanism, and means for operating the latter comprising

a cylinder, a piston in the cylinder, means for causing relative movement of cylinder and piston by the recoil and counter-recoil of the gun, and means for holding them immovable relative to each other during a part of counter-recoil, substantially as and for the purpose described.

9. In a breech-loading gun, mounted to recoil, the combination of breech mechanism, and means for operating the latter, comprising a stationary cylinder, a piston in the cylinder, a connection between the breech mechanism and the piston, whereby gun and piston move together during recoil and for a part of counter-recoil, and means for stopping movement of the piston during counter-recoil, substantially as and for the purpose described.

10. In a breech-loading gun, mounted to recoil, the combination of breech mechanism, a stationary cylinder, a piston in the cylinder, a connection between the breech mechanism and the piston, whereby gun and piston move together during recoil and for a part of counter-recoil, a recoil mechanism comprising a cylinder and piston, a passage between the two cylinders, and means for closing communication between the cylinders, during counter-recoil, substantially as and for the purpose described.

11. In a breech-loading gun, mounted to recoil, the combination of breech mechanism, a stationary cylinder, a breech-operating piston in the cylinder, a connection between the breech mechanism and the piston, whereby gun and piston move together during recoil and for a part of counter-recoil, a recoil mechanism comprising a cylinder and piston, a pipe between the two cylinders, and means whereby the operating-piston closes the inlet into its cylinder from said pipe, substantially as and for the purpose described.

12. In a breech-loading gun, mounted to recoil, the combination of breech mechanism, a stationary cylinder, a breech-operating piston in the cylinder, a connection between the breech mechanism and the piston whereby gun and piston move together during recoil and for a part of counter-recoil, a recoil mechanism comprising a cylinder and piston, a pipe between the two cylinders, means whereby the operating-piston closes the inlet into its cylinder from said pipe, and means for regulating the flow of fluid into the part of the recoil-cylinder back of its piston, substantially as and for the purpose described.

13. In a breech-loading gun, mounted to recoil, the combination of breech mechanism, means for operating the same during counter-recoil, comprising an operating cylinder and piston, a recoil cylinder and piston, a pipe connecting the two cylinders, and means to regulate the flow of fluid into the part of the recoil-cylinder back of its piston, substantially as described.

14. In a breech-loading gun mounted to recoil, the combination of breech mechanism, a recoil cylinder and piston, an operating cylinder and piston, connections between the latter and the breech mechanism, whereby the recoil and counter-recoil of the gun cause the piston to move with the gun, means whereby during a part of the counter-recoil, there is relative movement of gun and piston to open the breech, and hand-operated means, connected with said piston, for closing the breech, substantially as described.

15. In a breech-loading gun, mounted to recoil, the combination of breech mechanism, a cylinder and piston one of which is connected with the breech mechanism whereby the recoil and counter-recoil of the gun cause the same to move with the gun, means whereby during a part of counter-recoil there is relative movement of the gun and said part which is connected with the breech mechanism, to open the breech, and hand-operated means connected with said part, for closing the breech, substantially as described.

16. In a breech-loading gun, mounted to recoil, the combination of breech mechanism, and liquid-containing recoil-operated mechanism, provided with means for discharging air therefrom, substantially as described.

17. In a breech-loading gun, mounted to recoil, the combination of breech mechanism, a liquid-containing operating cylinder and piston, said cylinder being provided with an air-escape, and connections between the piston and the breech mechanism, substantially as described.

18. In a breech-loading gun mounted to recoil, the combination of breech mechanism, a liquid-containing operating cylinder and piston, said cylinder being provided with an air-escape adapted to be closed by the piston, and connections between the piston and the breech mechanism, substantially as described.

19. In combination with the operating-cylinder of a recoil mechanism, a supplemental liquid reservoir or chamber, substantially as and for the purpose described.

20. In combination with the operating-cylinder of a recoil mechanism, a supplemental, liquid reservoir or chamber, in constant communication therewith, substantially as and for the purpose described.

21. In combination with the operating-cylinder of a recoil mechanism, a supplemental liquid reservoir or chamber, having a sight-opening, substantially as and for the purpose described.

In testimony that we claim the foregoing we have hereunto set our hands this 26th day of July, 1899.

JOHN FORSYTH MEIGS.
SIGARD AXEL STEN HAMMAR.

Witnesses:
L. U. D. MIXSELL,
EDWARD J. MALLOY.

BEST AVAILABLE COPY

It is hereby certified that in Letters Patent No. 696,063, granted March 25, 1902, upon the application of John Forsyth Meigs and Sigard Axel Sten Hammar, of South Bethlehem, Pennsylvania, for an improvement in "Breech-Loading Guns," errors appear in the printed specification requiring correction, as follows: Line 25, page 3, after the compound word "operating-cylinder" the dash should be stricken out, and same line and page, after the word "is" the comma should be stricken out; and that the said Letters Patent should be read with these corrections therein that the same may conform to the record of the case in the Patent Office.

Signed, countersigned, and sealed this 1st day of April, A. D., 1902.

[SEAL.]

F. L. CAMPBELL,
Assistant Secretary of the Interior.

Countersigned:

F. I. ALLEN,
Commissioner of Patents.

Corrections in Letters Patent No. 696,063.

It is hereby certified that in Letters Patent No. 696,063, granted March 25, 1902, upon the application of John Forsyth Meigs and Sigard Axel Sten Hammar, of South Bethlehem, Pennsylvania, for an improvement in "Breech-Loading Guns," errors appear in the printed specification requiring correction, as follows: Line 25, page 3, after the compound word "operating-cylinder" the dash should be stricken out, and same line and page, after the word "is" the comma should be stricken out; and that the said Letters Patent should be read with these corrections therein that the same may conform to the record of the case in the Patent Office.

Signed, countersigned, and sealed this 1st day of April, A. D., 1902.

[SEAL.]

F. L. CAMPBELL,
Assistant Secretary of the Interior.

Countersigned:

F. I. ALLEN,
Commissioner of Patents.