(No Model.) 2 Sheets—Sheet 1.

A. E. SMITH.

ROUGH ROUNDING AND CHANNELING MACHINE.

No. 590,597. Patented Sept. 28, 1897.

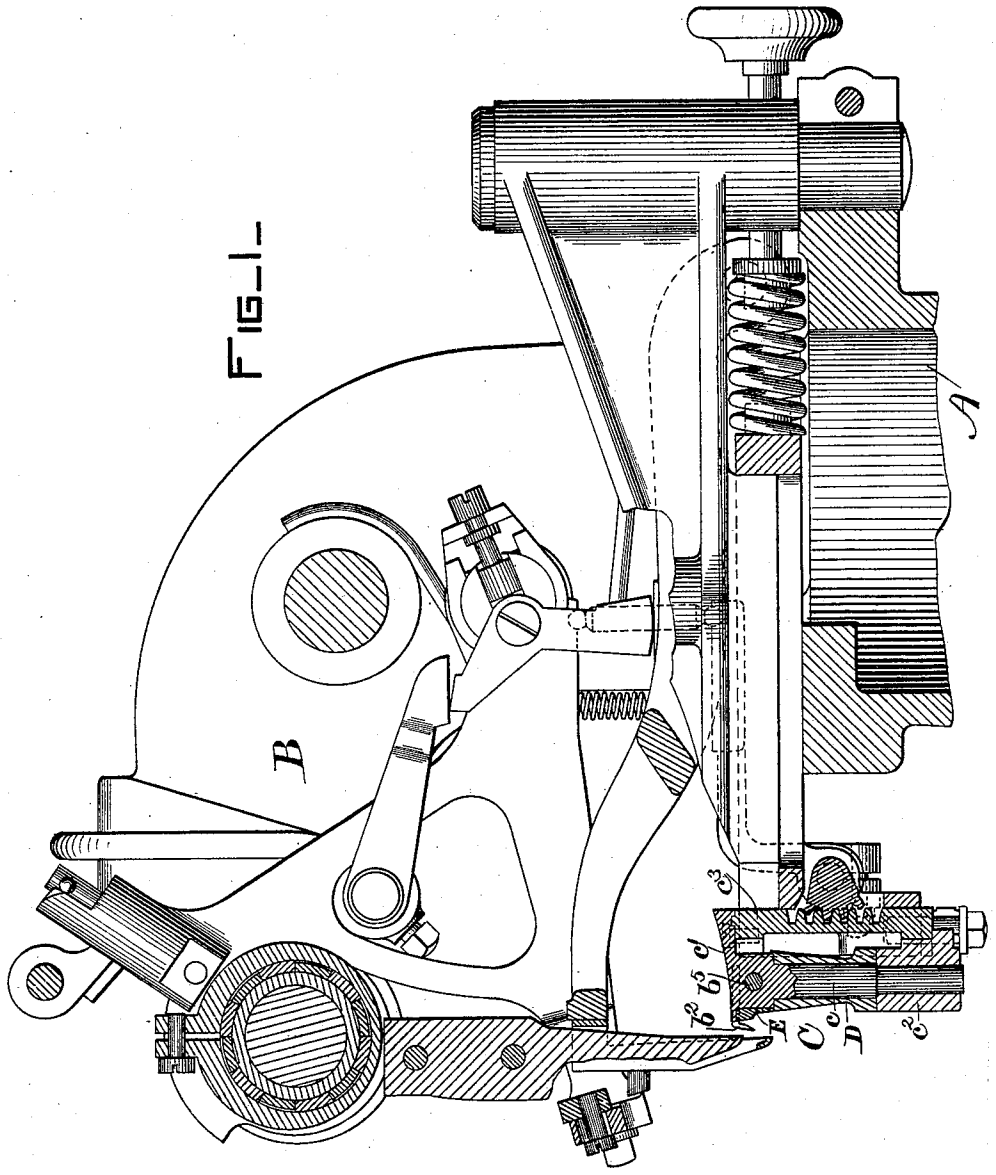

WITNESSES

A. O. Orne

A. E. Whyte

INVENTOR

Albert E. Smith,

By his attorneys,

Phillips & Anderson

THE NORRIS PETERS CO., PHOTO-LITHO., WASHINGTON, D. C.

(No Model.) 2 Sheets—Sheet 2.

A. E. SMITH.

ROUGH ROUNDING AND CHANNELING MACHINE.

No. 590,597. Patented Sept. 28, 1897.

FIG_2_

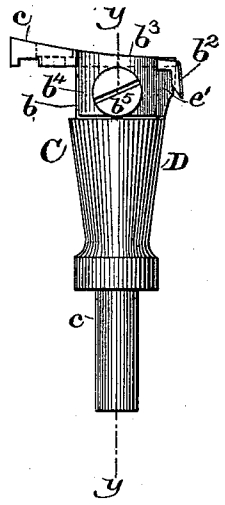

FIG_3_

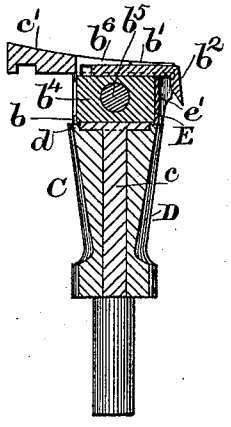

FIG_4_

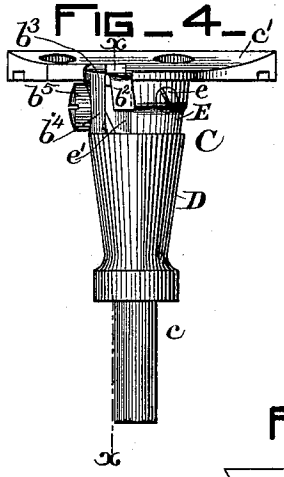

FIG_5_

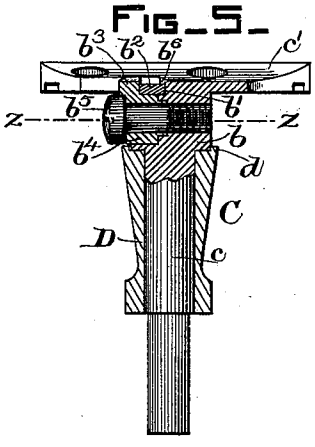

FIG_6_

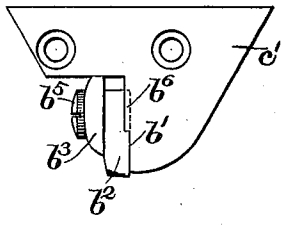

FIG_7_

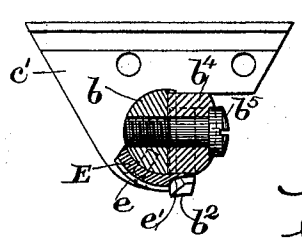

WITNESSES

A. W. Crue

A. E. Whyte

INVENTOR

Albert E. Smith,

By his attorneys,

Phillips & Anderson

THE NORRIS PETERS CO., PHOTO-LITHO., WASHINGTON, D. C.

UNITED STATES PATENT OFFICE.

ALBERT E. SMITH, OF WORCESTER, MASSACHUSETTS.

ROUGH-ROUNDING AND CHANNELING MACHINE.

SPECIFICATION forming part of Letters Patent No. 590,597, dated September 28, 1897.

Application filed October 2, 1896. Serial No. 607,698. (No model.)

To all whom it may concern:

Be it known that I, ALBERT E. SMITH, a citizen of the United States, residing at Worcester, in the county of Worcester and State of Massachusetts, have invented certain new and useful Improvements in Rough-Rounding and Channeling Machines; and I do hereby declare the following to be a full, clear, and exact description of the invention, such as will enable others skilled in the art to which it appertains to make and use the same.

My invention relates to rough-rounding and channeling machines, and more particularly to the channeling mechanism of such machines. In these machines as heretofore constructed the channeling-knife carrier and channeling-knife were assembled in the machine in such manner that to place the knife in position or to secure an adjustment of the same it was necessary to release the block sustaining the roll or sleeve against which the bottom of the sole rested and was guided during the operation of the machine, which took up much time and was otherwise objectionable. It was also necessary in the prior machine to employ a particular style of channeling-knife, which was fashioned with a block-shank of steel, and aside from the comparatively great cost of producing such knives it has been found in practice that by reason of the grain of the steel in the downturned end of said knives running transversely of the same said knives were easily broken in use.

The present invention has for its object to simplify the construction of the channeling mechanism of these machines, to provide for the ready application of the channeling-knife and its easy adjustment, and to otherwise improve the construction and operation of the machine.

To this end my invention consists of the devices and combination of devices which will be hereinafter described and claimed.

My invention is illustrated in the accompanying drawings, in which—

Figure 1 shows a vertical longitudinal sectional view of a rough-rounding and channeling machine embodying my invention. Fig. 2 shows a side elevation of my improved channel-knife carrier. Fig. 3 is a sectional view upon line $x\ x$, Fig. 4. Fig. 4 is a front view. Fig. 5 is a sectional view upon line $y\ y$, Fig. 2. Fig. 6 is a top plan view; and Fig. 7 is a sectional view upon line $z\ z$, Fig. 5, looking upwardly.

In the drawings, A represents a portion of a supporting-standard, upon the upper end of which is mounted a rough-rounding and channeling machine B, the parts of which, where not otherwise specified, may be, and preferably are, the same as those in the well-known "Goodyear rough-rounding and channeling machine," and therefore will not be described herein.

C represents the channeling-knife carrier, which comprises a spindle or rod c and a table or plate c', in which is fitted the channeling-knife, as will be more clearly hereinafter set forth. The knife-carrier C is supported by a bearing-block c^2, within which fits the lower end of spindle c, and by a plate c^3, upon which the rear edge of the table or plate c' rests.

As in the machine hereinbefore referred to, the block c^2 and the plate c^3 are adapted to move upwardly and to carry with them the channeling-knife carrier and knife.

Referring more particularly to Figs. 2 to 7, it will be noted that the spindle c of the knife-carrier C has a head or enlargement b upon its upper end immediately below the plate c', which is cut away upon one side, as shown in Fig. 7.

The plate c' is preferably of a triangular shape, as shown in Fig. 6, and upon one side of the apex is cut away, and upon the edge b' formed by said cut is a bearing for one edge of the shank of the channeling-knife b^2, forming one member of the knife-clamp. The other member of the knife-clamp is formed by a shoulder b^3 upon a block b^4, fitted in the cut-away portion of the head b, the block b^4 being mounted upon a bolt or screw b^5, fitted to a threaded bearing in the head b. The channeling-knife b^2 in this instance may be simply a piece of steel in which the end is bent down and sharpened, and thus the continuity of the grain of the steel preserved in the cutting end. Such a knife is much cheaper to make than the block-knife of the machine above referred to, and, moreover, is not so liable to break. This knife is held in place by placing its shank between the bearing b' and the shoulder b^3 and tightly drawing the

same toward each other by means of the screw or bolt b^5.

As in the machine hereinbefore referred to, there is provided a rotary sleeve D, which is mounted upon the spindle c of the knife-carrier C and forms a bearing or rest for the shoe-sole during the operation of the machine. The sleeve D is supported upon the block c^2, and instead of extending the sleeve upwardly immediately adjacent the under side of the plate or table c', as in the prior construction, thus covering the screw which retains the channeling-knife and necessitating the removal of said sleeve in order to remove or adjust said knife, the sleeve D is of a length to take under the head b, it being preferably formed with an upwardly-projected flange d, which surrounds the lower portion of said head.

E represents a guide which is preferably formed of a curved plate secured in position adjacent to the knife b^2 and between the plate or table c' and the sleeve D by a screw e. In order to relieve the point of the knife b^2 from the breaking strain of the channel-flap cut by the same, which passes beneath the knife, and to prevent the wedging of the flap between the knife and the guide, a depression or groove is formed in the guide, as shown, which permits the free passage of the flap between the knife and guide. It will be noted that while I have shown the groove e' as formed in the guide E said guide E could be shorter or adjusted to bring its forward end immediately adjacent the cutting edge of the knife b^2, thus leaving a space or clearance immediately below said knife, or the groove could be formed in the block b^4.

In operation the knife-carrier C is mounted in the machine, as shown in Fig. 1, and the knife b^2 inserted by placing its shank between the clamping-face b' and the shoulder b^3 on the block b^4 and securely clamped in position by turning the screw or bolt b^5, and this can be done without releasing the block c^2 and dropping the sleeve D, as in previous constructions, and the knife b^2 can be readily and quickly adjusted by loosening the screw or bolt b^5, which is always readily accessible to the operator. If desirable, an overlapping flange b^6 may be provided upon the edge b' to take over the shank of the knife to prevent any upward movement thereof.

The machine has a suitable feed mechanism, and the sole of the shoe is placed with its edge in position to be operated upon by the rough-rounding knife, the bottom of the sole resting against the sleeve D in such position that as the shoe is fed past the point of the channeling-knife it will cut a channel in the outer face thereof adjacent to the edge in a well-known manner.

Having fully described my invention and its mode of operation, I claim as new and desire to protect by Letters Patent of the United States—

1. In a rough-rounding and channeling machine, a channel-knife carrier comprising a supporting-spindle, a rotary sole-rest mounted on the spindle, and a knife-clamp on said spindle above the rest, substantially as described.

2. In a rough-rounding and channeling machine, a channel-knife carrier comprising a supporting-spindle, a rotary sole-rest mounted on the spindle, and a knife-clamp on said spindle above the rest comprising fixed and movable clamping members and a screw for actuating said movable member, substantially as described.

3. In a rough-rounding and channeling machine, the combination with the supporting-spindle, a sole-rest mounted on said spindle, of a knife-clamp carried by said spindle above the sole-rest and guide for the sole on said knife-clamp, substantially as described.

In testimony whereof I affix my signature in presence of two witnesses.

ALBERT E. SMITH.

Witnesses:
C. E. SNOW,
C. L. BARKER.