April 7, 1936. A. M. BABITCH ET AL 2,036,452

FUEL PUMP

Filed Dec. 6, 1934 2 Sheets-Sheet 1

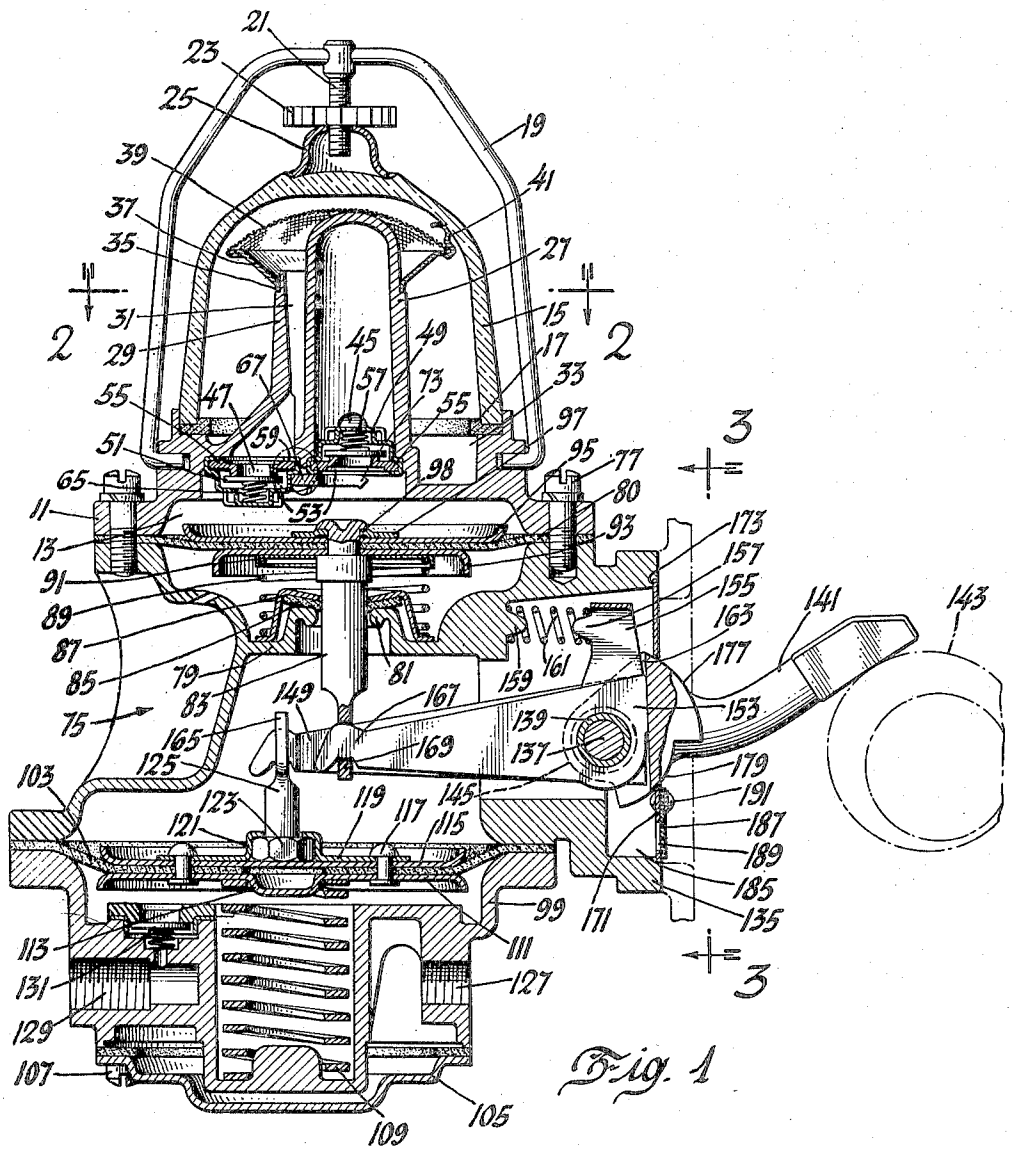

Fig. 1

Inventors
Abraham M. Babitch &
Gordon W. Hatty

By Blackmore, Spencer & Flint
Attorneys

April 7, 1936. A. M. BABITCH ET AL 2,036,452

FUEL PUMP

Filed Dec. 6, 1934 2 Sheets-Sheet 2

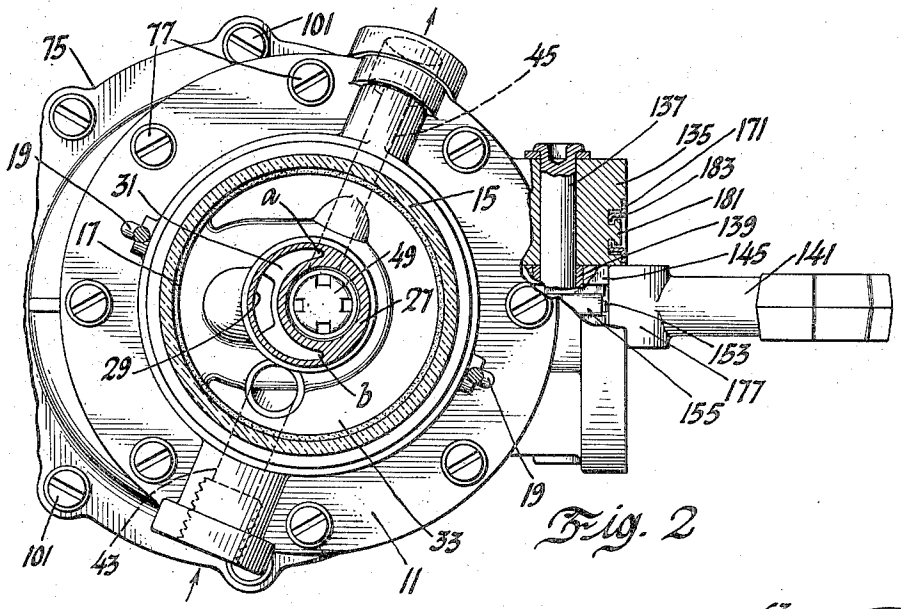

Fig. 2

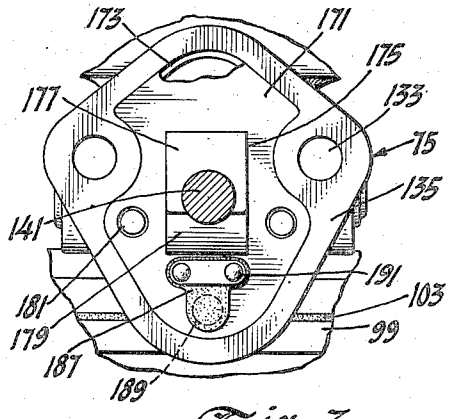

Fig. 3

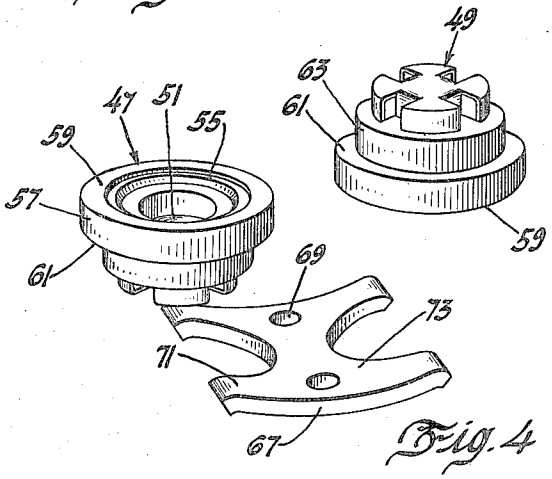

Fig. 4

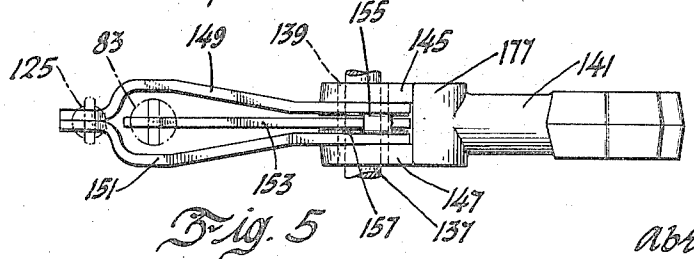

Fig. 5

Inventors
Abraham M. Babitch &
Gordon W. Hatty

By Blackmore, Spencer & Flint
Attorneys

Patented Apr. 7, 1936

2,036,452

UNITED STATES PATENT OFFICE

2,036,452

FUEL PUMP

Abraham M. Babitch and Gordon W. Harry, Flint, Mich., assignors to General Motors Corporation, Detroit, Mich., a corporation of Delaware

Application December 6, 1934, Serial No. 756,257

4 Claims. (Cl. 103—150)

This invention relates to pumps and has been designed as an improved pump for supplying fuel from the fuel reservoir of a motor vehicle to the engine.

The object of the invention is to provide a pump having superior characteristics such as freedom from leakage, simplicity in the process of assembling the parts, and freedom from noise in operation.

Other objects and advantages will be understood from the following description.

In the illustrated embodiment shown in the drawings the fuel pump is associated with a vacuum booster pump intended particularly for supplementing the engine manifold in the operation of a suction motor of an accessory such as a windshield cleaner.

In the drawings:

Fig. 1 is a vertical section through the combined pump structure.

Fig. 2 is a section on line 2—2 of Fig. 1.

Fig. 3 is a section on line 3—3 of Fig. 1.

Fig. 4 is a perspective of the fuel pump valve assembly and the retainer therefor, parts being shown in disassembled relation.

Fig. 5 is a plan view of the rocker arm and link assembly.

Referring by reference characters to the drawings, numeral 11 is the upper of three casing members, these being preferably made by die casting. The member 11 is recessed on its underside at as 13. To its upper surface there is secured an inverted cup 15 which may be of glass and which is held against a gasket 17 by a conventional bail 19. The top of the bail carries a screw 21 upon which is threaded a nut 23, the latter engaging a cup-shaped stamping 25 in contact with the glass cup 15 to hold it in position. Within the cup 15 and integral with the casing 11 is a closed air dome 27. The casing is also formed with a wall 29 merging with the wall of the air dome at spaced points marked *a* and *b* in Fig. 2. Between the spaced points *a* and *b* the wall 29 is spaced from the wall of the air dome 27 to form a pump inlet space or region 31. The upper wall of member 11 also has formed therein an arcuate sediment collecting recess 33. The upper part of the dome 27 together with the wall 29 is formed with a circular ledge 35 upon which is supported the lower and smaller edge of a funnel-shaped ring 37 to the top of which ring is secured a strainer 39 of wire cloth. A plurality of peripherally spaced fingers 41 extend from the top of ring 37 and engage the glass cup. The strainer assembly is thus resiliently held in position. Leading into the space within the glass cup and communicating with the region outside the dome 27 and the wall 29 is a passage 43 extending through the wall of casing 11 as shown in Fig. 2. An inlet pipe from the fuel reservoir is to be secured to the entrance 43. From the region within the dome 27 an outlet passage 45 extends through casing 11 to the wall thereof as shown in Fig. 2. From the end of this passage a conduit is to be connected for communication with the carburetor of the engine.

It will now be understood that the recess 13 is the pump chamber, and that fuel enters it by way of passage 43, through the screen 39 and then through space 31. From the pump chamber the fuel passes into the dome 27 and out through passage 45. Controlling the entrance and exit are inlet and outlet valve assemblies. The inlet valve assembly, marked 47, is beneath the flared opening from space 31 leading to the pump chamber. The outlet valve assembly, marked 49, is in the communicating passage from the pump chamber to the dome. The two valve assemblies, 47 and 49, are identical in construction and are illustrated in Fig. 1 and Fig. 4. Each valve assembly consists of a disc valve 51 formed to engage a seat 53, the seat being the smaller diameter part of an apertured ring 55. A stamping 57 has a circular edge 59 bent over and engaging the the outer face of ring 55. The stamping surrounds the outer periphery of ring 55 and is inwardly bent to engage the opposite face of the larger diameter portion as shown at 61. The stamping is then extended to form a ring portion 63. It is within this ring portion that the disc valve 51 reciprocates to and from its seat. The stamping then extends as shown by Fig. 4 to form an abutment for the spring 65 of the valve. Inlet valve assembly 47 is positioned as shown by Fig. 1 and Fig. 4 with the face 59 engaging the casing wall around the passage between space 31 and the pump chamber. Outlet valve assembly 49 is inverted so that the face 61 engages the annular wall between the pump chamber and the dome 27. A valve clamp or retainer 67, shown in detail in Fig. 4, is provided with openings 69 for the passage of suitable fastening means by which it may be secured to the underside of casing 11. This clamp has opposite arcuate arms 71 and 73. Arm 71 engages face 61 of valve 47 and arm 73 engages face 59 of valve 49. By this expedient it is unnecessary to make separate

inlet and outlet valve assemblies. A single easily secured retainer holds both valve assemblies in position. In this way the cost of manufacture is reduced as is also the cost of assembly and removal of the valves.

The intermediate pump casing member is designated by numeral 75. Fastening means 77 clamp casing members 11 and 75 together with the pump diaphragm 80 therebetween. Casing member 75 has an inner part 79 with an apertured wall 81 through which the diaphragm stem 83 extends with a small clearance. Overlying the wall 81 is an oil seal disc 85 formed from soft material such as rubber or leather. It is positioned by a retainer 87. The retainer has at its lower end a flange seated on the casing member. A spring 89 engages the retainer flange at its lower end and a spring guide washer 91 at its upper end. It may be stated here that this spring 89 is the instrumentality for producing the discharge stroke of the pump. The guide washer 91 is seated on a shoulder of stem 83 together with diaphragm protecting washers 93 and 95, the former beneath and the latter above the diaphragm 80. Above washer 95 there is press-fitted on the stem a washer 97. Washer 97 has a central stepped portion at 98. The assembly of diaphragm and washers is then rigidly secured by riveting or spinning over the hollowed end of rod 83 as shown by Fig. 1. The recess in washer 97 provided by the stepped construction takes care of any copper shavings which may be produced when the washer is press-fitted over the stem which is to be copper-plated. Since washer 97 is fitted on the stem a fixed relationship exists between the position of the diaphragm and the flat on its stem 83, which flat must be correctly positioned for engagement with operating mechanism as will be explained below.

Beneath intermediate casing 75 is a third casing member 99. This third member is secured to casing 75 by fastening means 101 and a diaphragm 103 is clamped between these two casing members. A cap 105 is secured by fastening means 107 to the bottom of casing 99. A spring 109 is seated upon a suitable abutment within casing 99 and engages diaphragm protecting washer 111, the latter being depressed centrally to position the spring as at 113. Upper washer 115 is secured to the diaphragm and to the lower washer by rivets 117 which also secure an additional washer 119 having a centrally disposed raised portion angular in outline at 121. Within this angular raised portion is seated a similarly shaped head 123 of stem 125. In this way there is no possible leakage through diaphragm 103, and since no relative rotation can occur between the stem and the diaphragm a flat face on the stem 125 for engagement with operating mechanism is definitely located by a predetermined position of rotation of the diaphragm. The lower casing has suitable inlet and outlet openings at 127, 129. It also has inlet and outlet valves, the latter of which is shown at 131. Since it is old to associate such a second pump with a fuel pump and since no details of the second pump, in addition to those already described, constitute a part of this invention, it is unnecessary to further describe the second pump.

The operating means for the two pumps is located in the intermediate chamber 75 and a portion of the operating means projects from casing 75 into the engine casing when the casing 75 is clamped to the engine casing, provision for which is shown by openings 133 in the casing flange 135. A pivot pin 137 is press-fitted into casing 75 and extends across an opening in flange 135. A bushing 139 is journaled on the pin 137. Journaled for rotation on the bushing is a rocker arm 141. One end of arm 141 extends into the path of movement of cam 143 within the engine casing. The other end of rocker arm 141 is forked, its furcations 145 and 147 rotatably supported on the bushing 139. Between the furcations 145 and 147 are the journaled ends of links 149 and 151. Between these links and also journaled on the same bushing is a shorter link 153. A U-shaped link spacer and spring seat is shown at 155. The legs of this U-shaped spring seat are mounted for rotation on the bushing 139 and are located between links 149 and 151 and straddle link 153. Adjacent the bend of the U of member 155 and on the legs are locating lugs 157. Cooperating with these lugs is a casing lug 159. The lugs on member 155 and on the casing position a spring 161. This spring acts to push the member 155 whereby it engages a surface 163 on the rocker arm 141 between the furcations and thereby functions to keep the rocker arm in contact with the cam. The surface 163 is also adapted to engage the end surfaces of links 149, 151, and 153 and to swing said links. The engaging surfaces between the links and the rocker arm afford lost motion connections whereby the pumps may operate with variable strokes. The mechanical mechanism involving the rocker arm and the links function to make the suction stroke of the fuel pump and the discharge stroke of the vacuum pump. The springs 89 and 109 serve to make the other strokes of the two pumps. Links 149 and 151 are brought into contact at their extreme ends as shown in Fig. 5. The ends are shaped into hooked form as may be seen in Fig. 1 where they are extended through an opening in the flat portion 165 of stem 125. Similarly the hooked end 167 of link 153 is interlocked with the flat end 169 of stem 83. In assembling the parts it will be seen that the flats on the stems must be positioned as shown, and since the flats have a fixed relationship to the diaphragm in the case of both pumps, predetermined positions of the diaphragms will insure the correct relationship of the stems with the links.

It is desirable that the hot oil should not pass from the crank case through the opening into the pump casing provided for the passage of the rocker arm. Such oil may damage the diaphragm and the oil loss may become serious. To that end a plate or seal 171 shaped as shown in Fig. 3 is placed over the casing flange 135, its edge resting on a ledge 173 of the casing as shown in Fig. 1. The seal has an opening 175 and the rocker arm 141 has surfaces 177 and 179 snugly fitting the upper and lower walls of the seal opening as the rocker arm rotates on its pivot. The side faces of the rocker arm engage the side walls of the opening 175. To secure the seal in position there are provided tenons 181 in the casing flange. Adjacent these tenons the seal has apertured depressed regions as at 183. After the apertures are positioned to surround the tenons, the latter are staked over the seal to hold it as shown in Fig. 2. It will be seen that in the staking process the end of the tenon is not clamped against the seal. In this way slight movement of the seal is provided to ac-

commodate any irregularity in the location of the rocker arm which snugly fits the opening in the seal as explained above. Provision is made for the return of any oil which may enter the pump casing from the crank case. In the lower part of the casing flange 135 is a pocket 185 within which any oil passing around the rocker arm may collect. A flap valve 187 of flexible material and secured to the seal 171 covers an opening 189 communicating with the crank case. This valve is secured by suitable fastening means 191. The oil may return to the crank case through this valve, but the valve closes against the passage of oil from the crank case.

Among the advantages resulting from the novel pump structure described above are the following: The screen is not clamped between covers as in many prior constructions. Leaking, which would affect priming of the pump, is therefore avoided. The provisions to prevent rotation of the diaphragms relative to their stems is of help in assembling the parts because the stems must be located in predetermined positions of rotation to engage the links. The oil sealing devices for the fuel pump stem and for the passage between the crank case and pump casing effectively prevent damage to the diaphragms from heated oil within the crank case. A leak-proof assembly is provided for the connection between the vacuum pump diaphragm and its stem. The sliding contact between the parts rotating on the pivot pin bushing prevents noise. The novel valve assembly is of importance, particularly for purposes of assembly and replacement. Both valves are alike and assembly and replacement of both is simultaneously effected by the attachment or removal of a simple retainer. The use of the bushing to take the load of the rocker arm and links prevents any loosening of the pivot pin in the casing.

We claim:

1. In a pump, a pump casing, a movable pumping member therein, an actuating lever journaled in said casing, projecting therefrom and operably connected to said movable member, sealing means carried by said casing and apertured for the passage of said lever, said lever being shaped to continuously fit the aperture of said seal as it rotates, said sealing means being secured to said casing by means permitting slight movement thereof to accommodate irregularities in the position of said lever.

2. In a pump, a pump casing, a movable pumping member therein, an actuating lever journaled in said casing, projecting therefrom and operably connected to said movable member, sealing means carried by said casing and apertured for the passage of said lever, said lever being shaped to continuously fit the aperture of said seal as it rotates, said seal having at its lower end an opening covered by a flap valve to permit passage of fluid from within the pump casing.

3. In a pump, a pump casing, an actuating rocker arm journaled therein and projecting therefrom, a journal for said rocker arm, pump operating linkage rotatably carried by said journal, a spring seat also rotatably supported on said journal, and yielding means between said seat and casing to hold said seat in contact with said rocker arm.

4. The invention defined by claim 3, said spring seat being of U-shape, the sides of the seat straddling said linkage.

ABRAHAM M. BABITCH.
GORDON W. HARRY.