US 20090183438A1

(19) United States

(12) Patent Application Publication

Walker

(10) Pub. No.: US 2009/0183438 A1

(43) Pub. Date: Jul. 23, 2009

(54) DEBRIS REMOVAL GUTTER SYSTEM

(76) Inventor: William Lloyd Walker, Greenville, SC (US)

Correspondence Address:
J. BENNETT MULLINAX, LLC
P. O. BOX 26029
GREENVILLE, SC 29616-1029 (US)

(21) Appl. No.: 12/009,666

(22) Filed: Jan. 22, 2008

Publication Classification

(51) Int. Cl.
E04D 13/064 (2006.01)

(52) U.S. Cl. 52/11

(57) ABSTRACT

A gutter system is provided. The gutter system may include a channel that is capable of catching water from a roof. A mounting member may be present and may be configured for at least partially supporting the channel. The channel may be rotationally mounted to the mounting member so that the channel is capable of rotating with respect to the mounting member. The channel can have a force applied thereto in order to thus rotate about an axis of rotation so that debris present in the channel will fall from its interior and thus effect a cleaning of the channel.

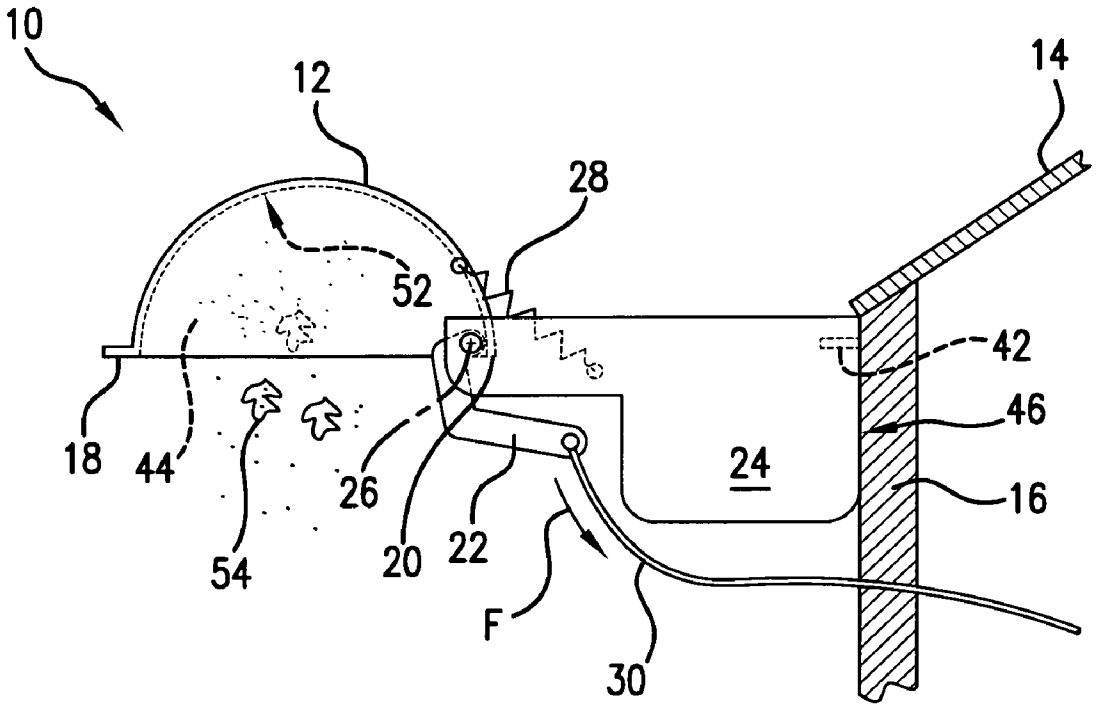

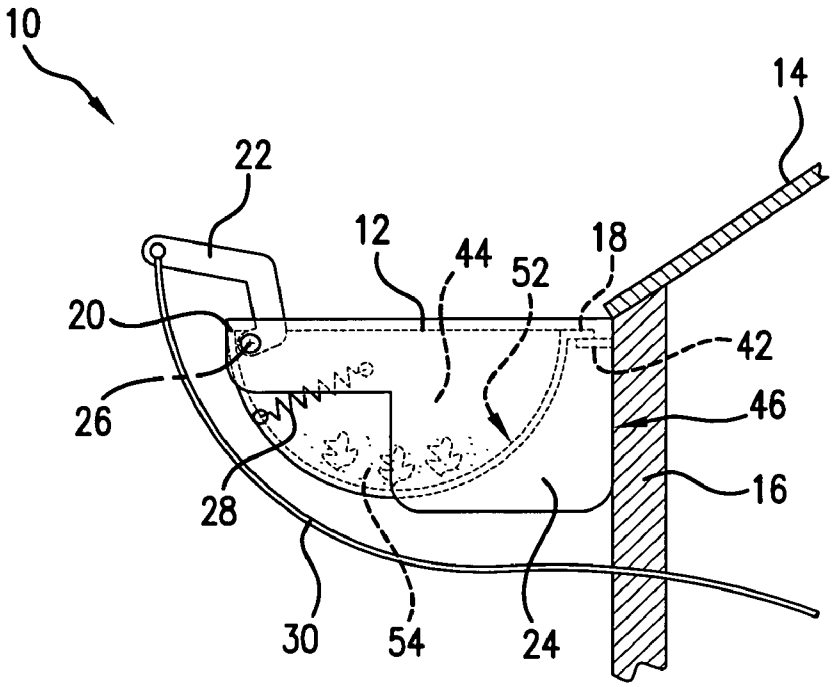
10
14
22
12
44
52
18
20
42
26
46
28
16
30
54
24

FIG.1

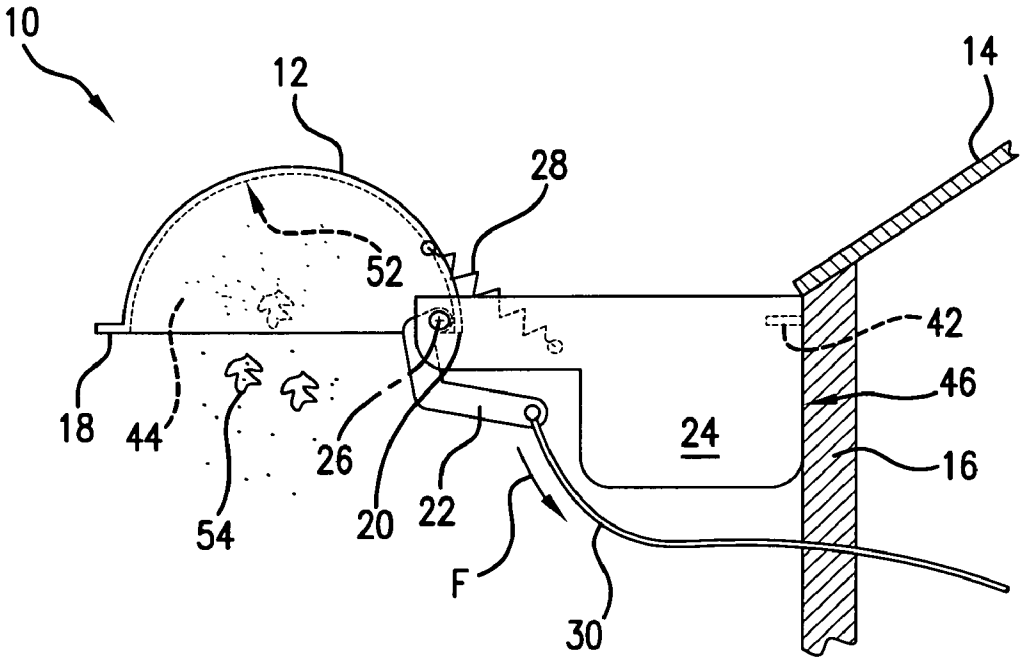
10
12
14
28
52
42
46
18
44
24
26
16
54
20
22
F
30

FIG.2

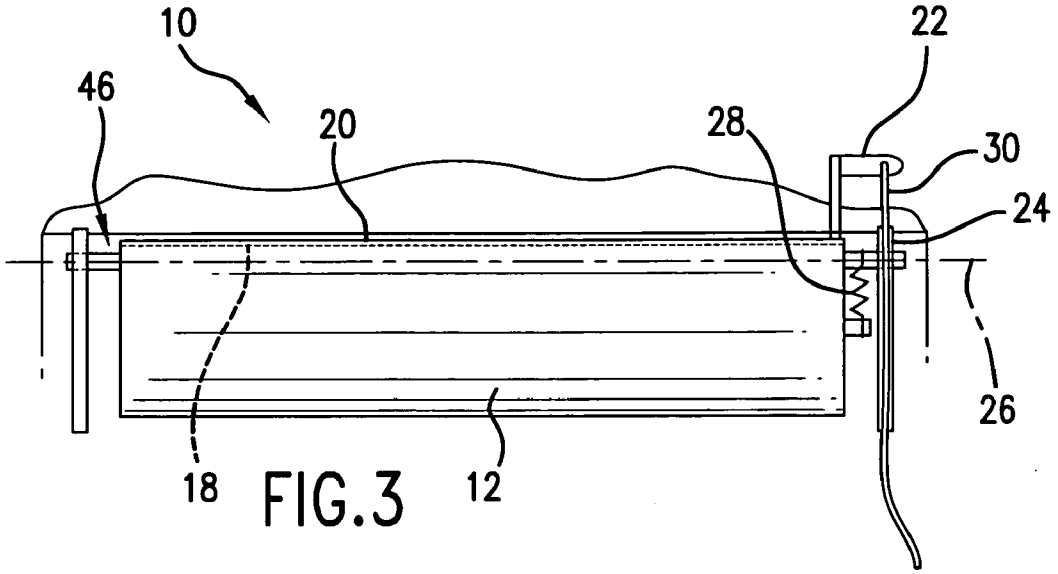
10
46
20
28
22
30
24
26
18
12

FIG.3

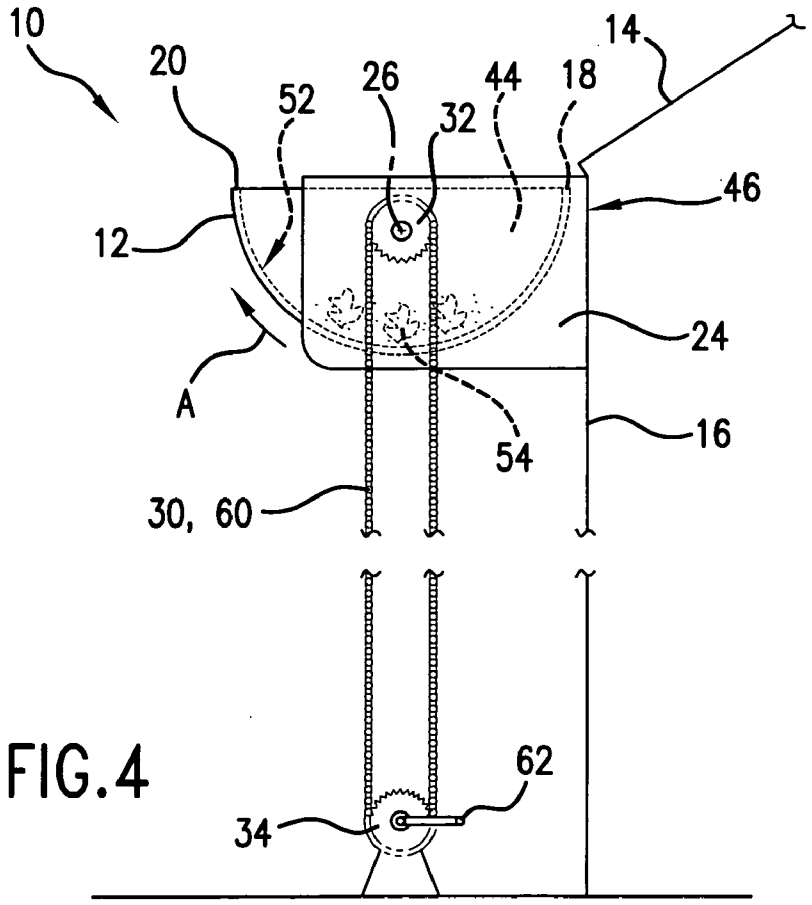
10
20
52
26
32
44
18
14
46
12
24
A
54
16
30, 60
62
34

FIG.4

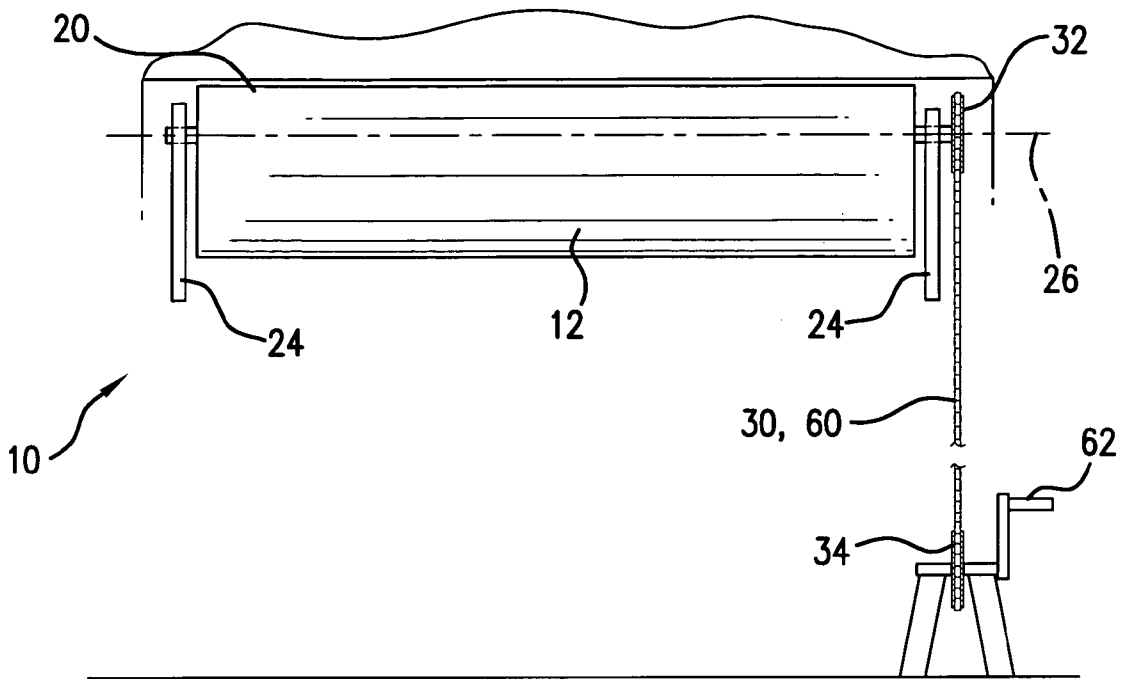
20
32
26
24
12
24
10
30, 60
62
34

FIG.5

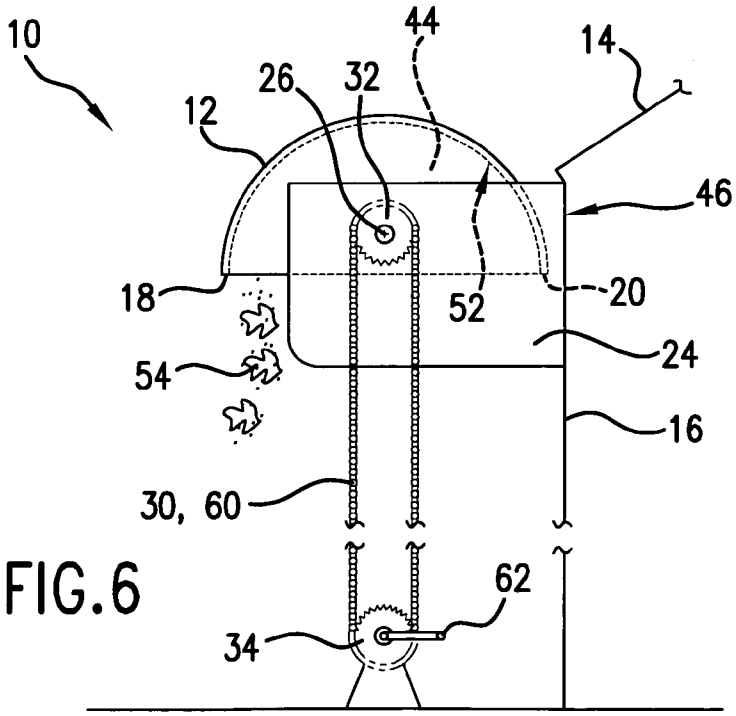
10
44
14
26
32
12
46
18
52
20
24
54
16
30, 60
62
34

FIG.6

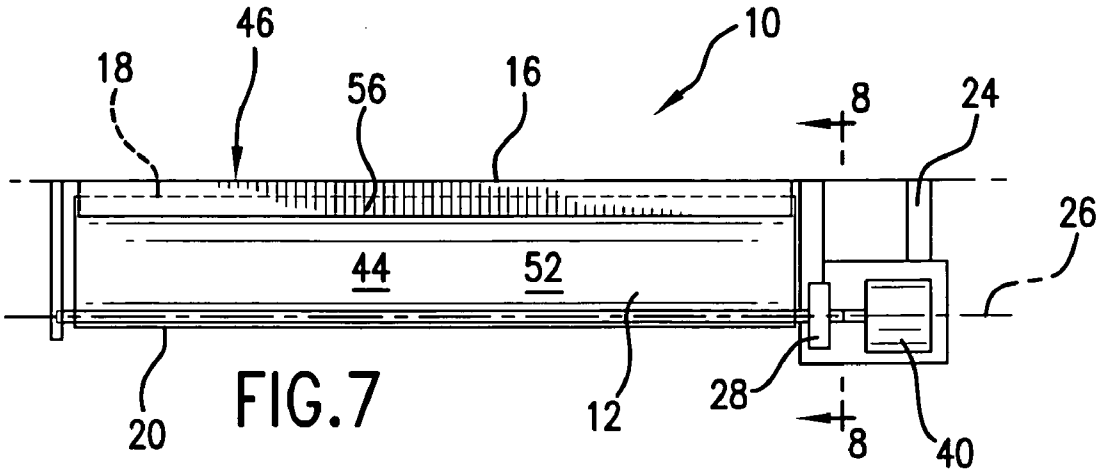

FIG.7

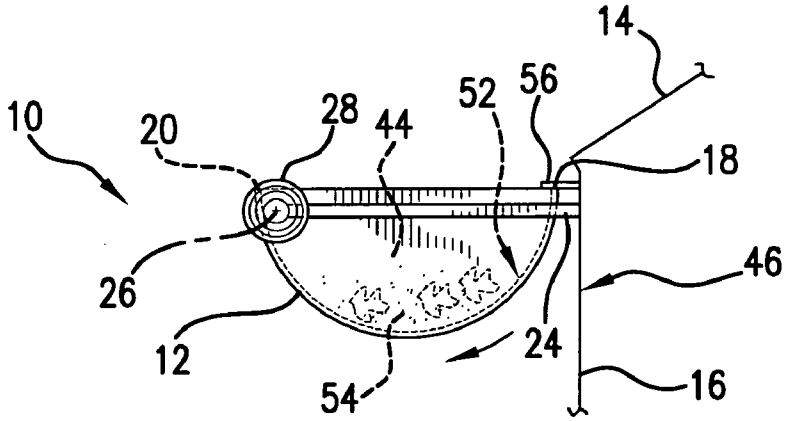

FIG.8

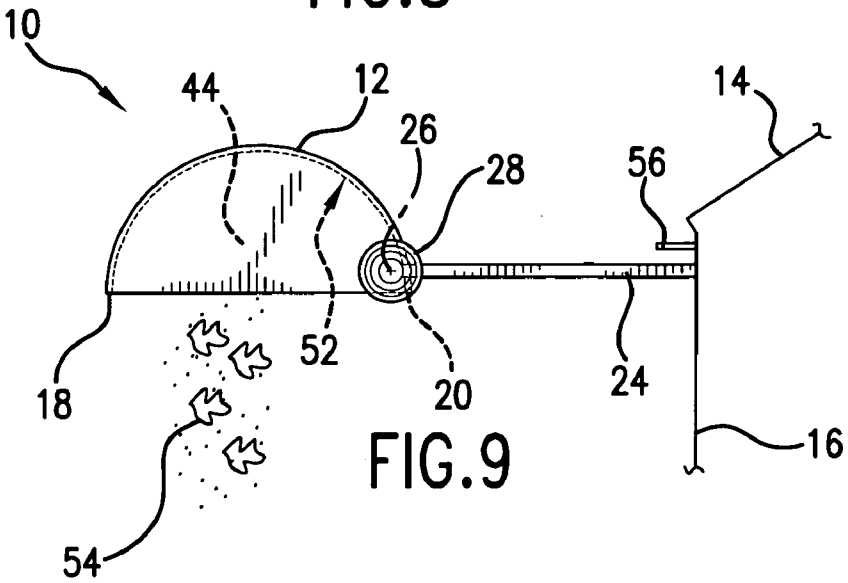

FIG.9

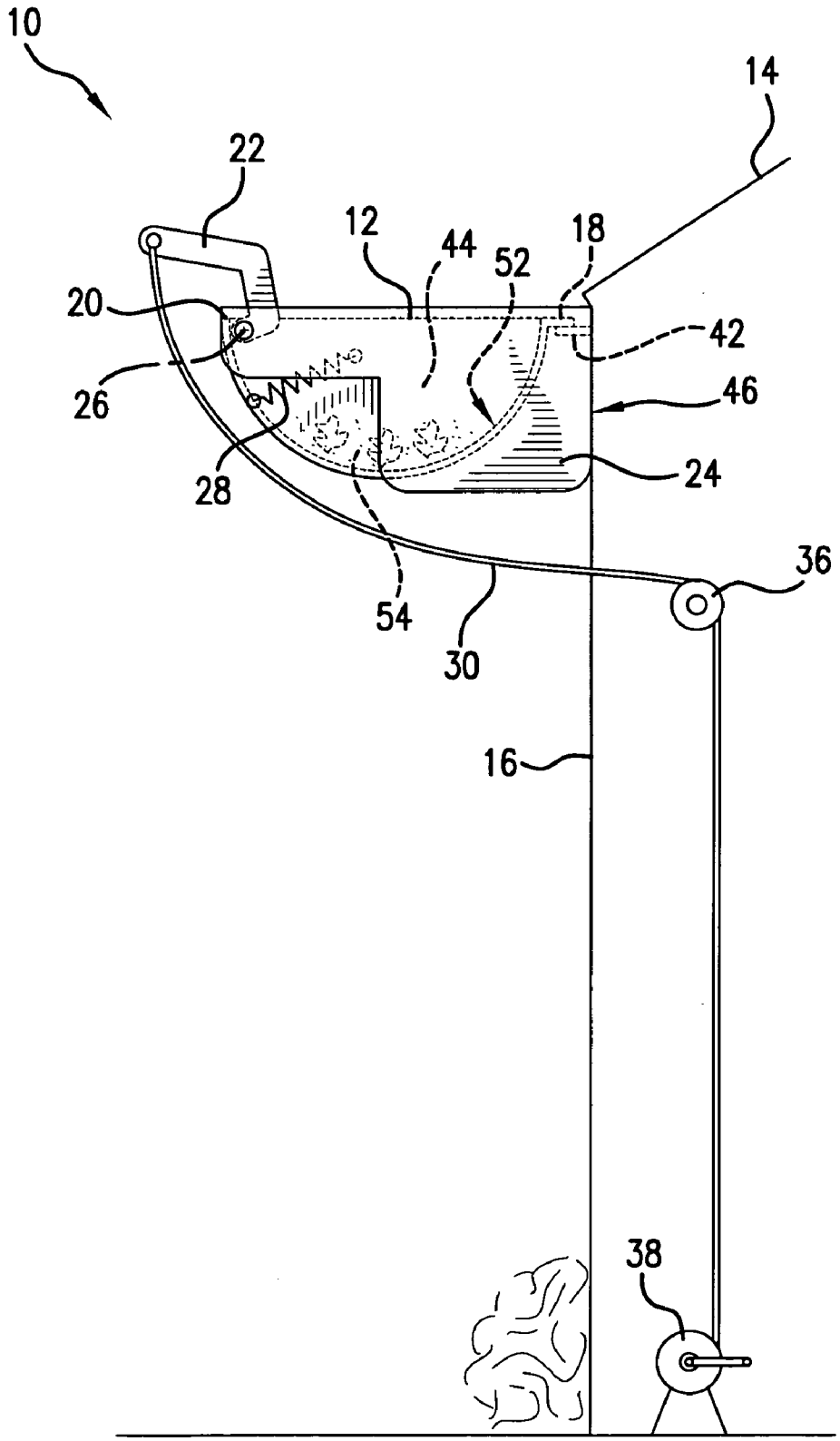

FIG.10

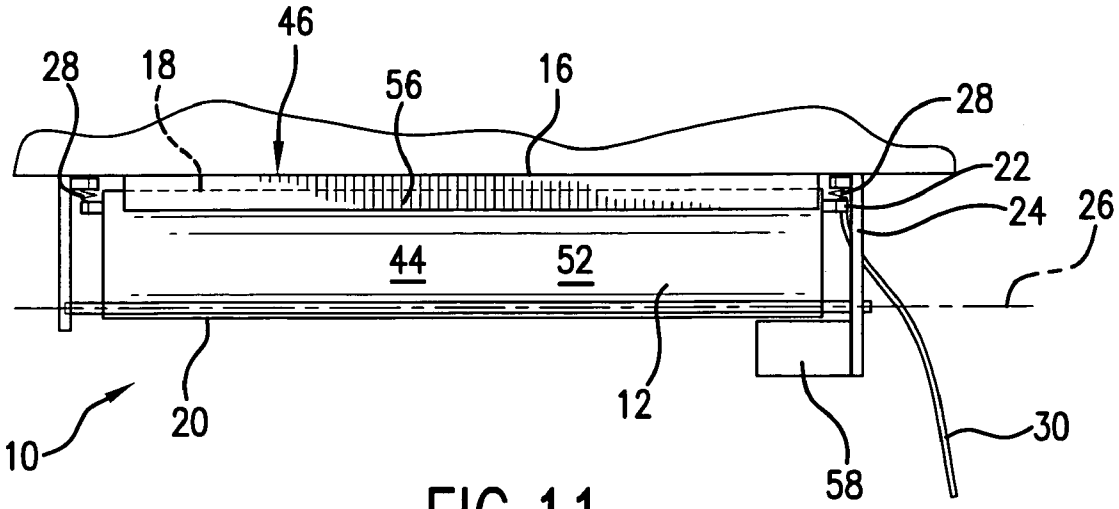
46
28
18
56
16
28
22
24
26
44
52
10
20
12
58
30

FIG.11

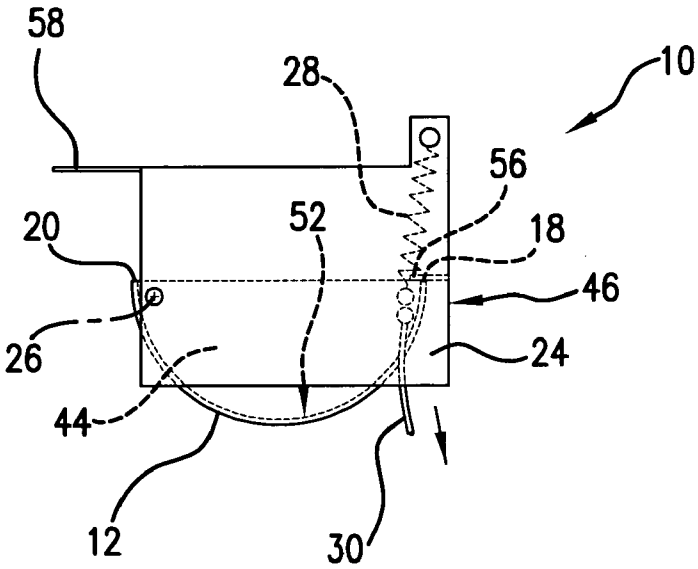
58
28
10
56
20
52
18
46
26
24
44
12
30

FIG.12

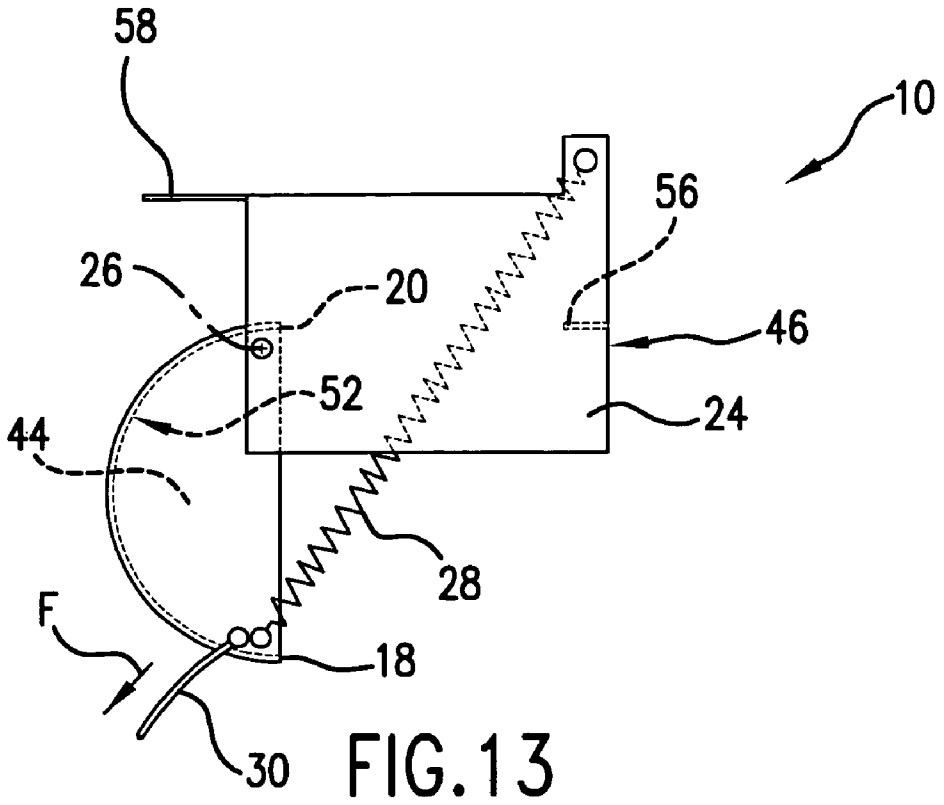
58
10
56
26
20
46
52
24
44
28
F
18
30

FIG.13

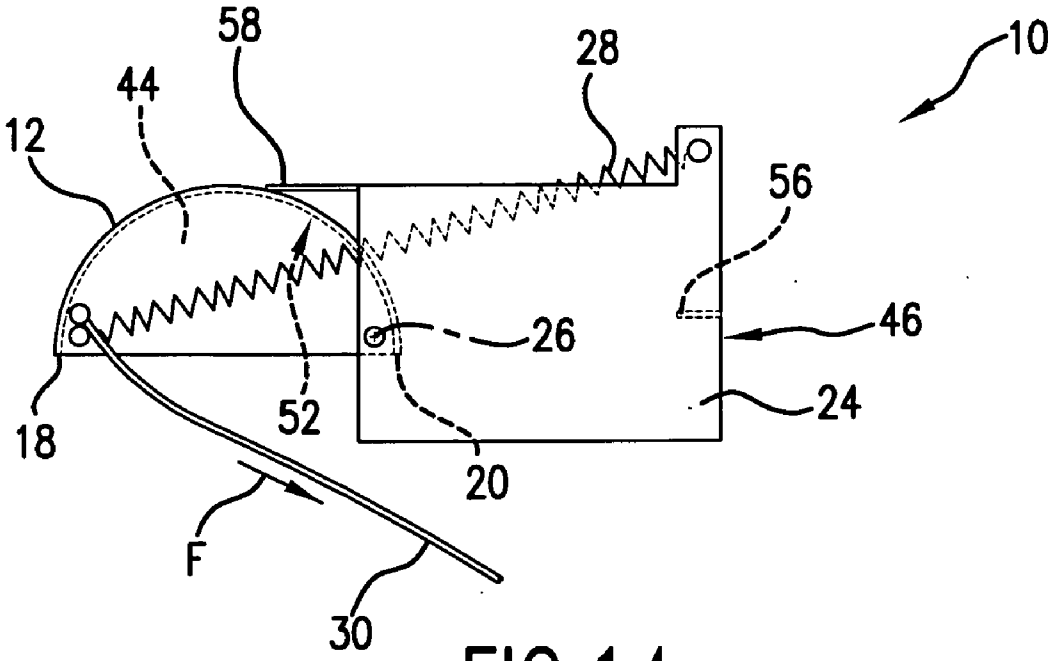
58
28
10
44
12
56
26
46
52
24
18
20
F
30

FIG.14

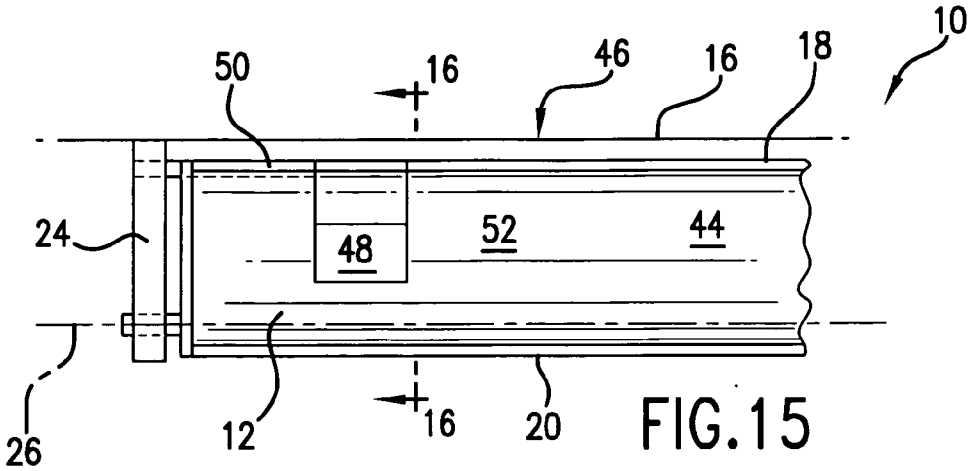

FIG.15

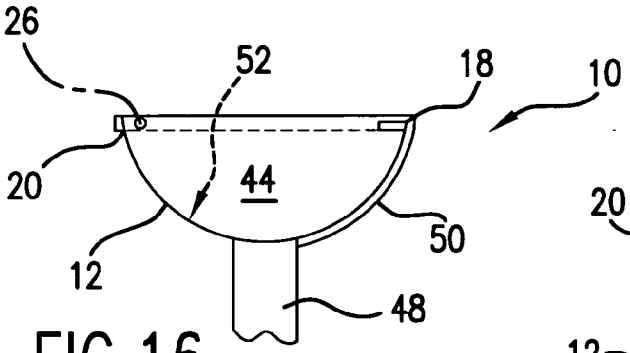

FIG.16

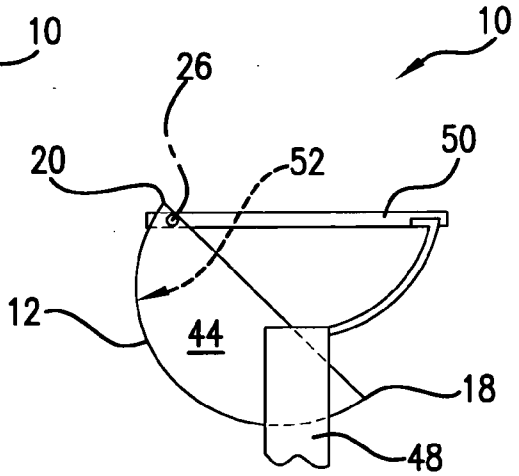

FIG.17

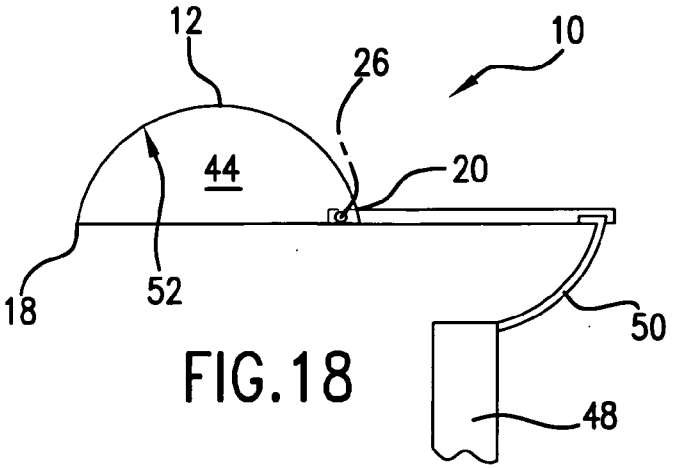

FIG.18

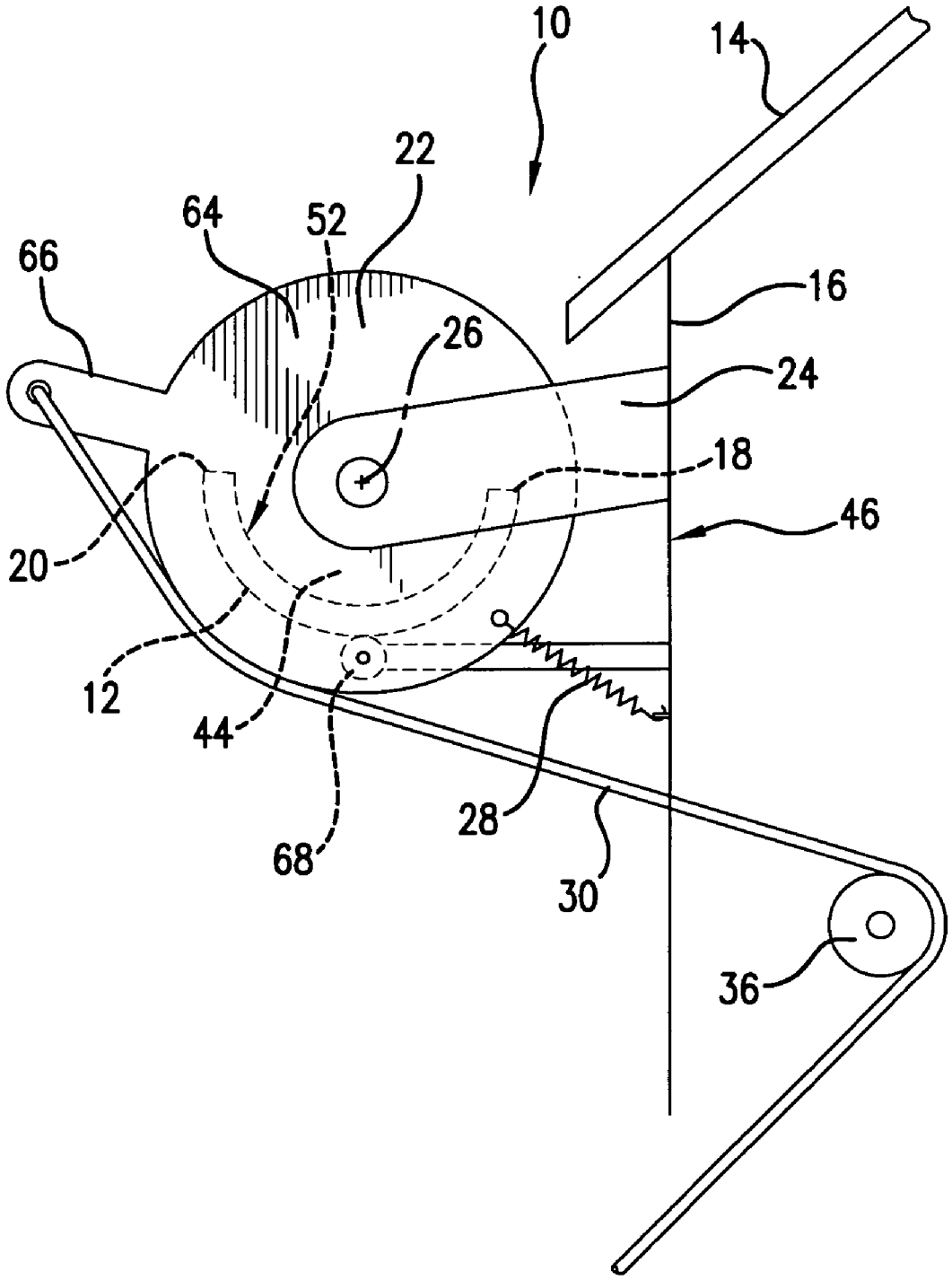

FIG.19

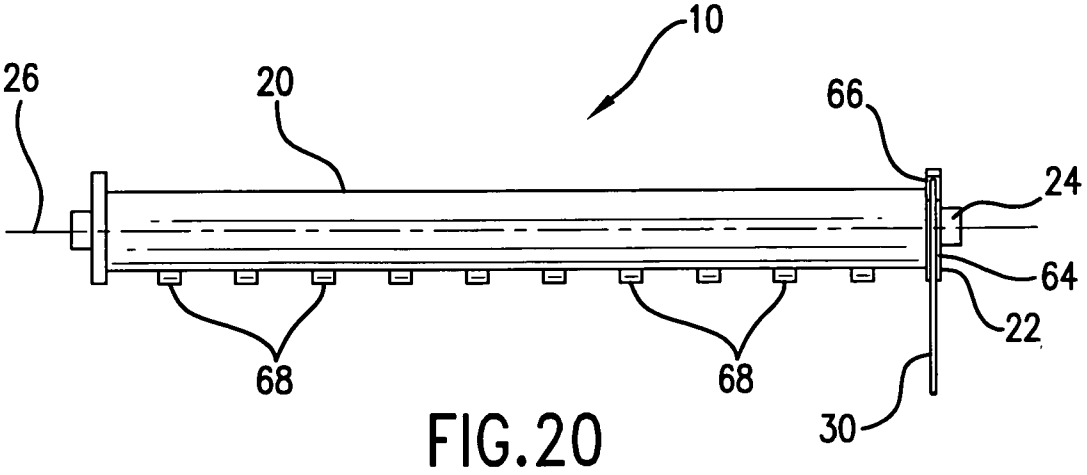

FIG.20

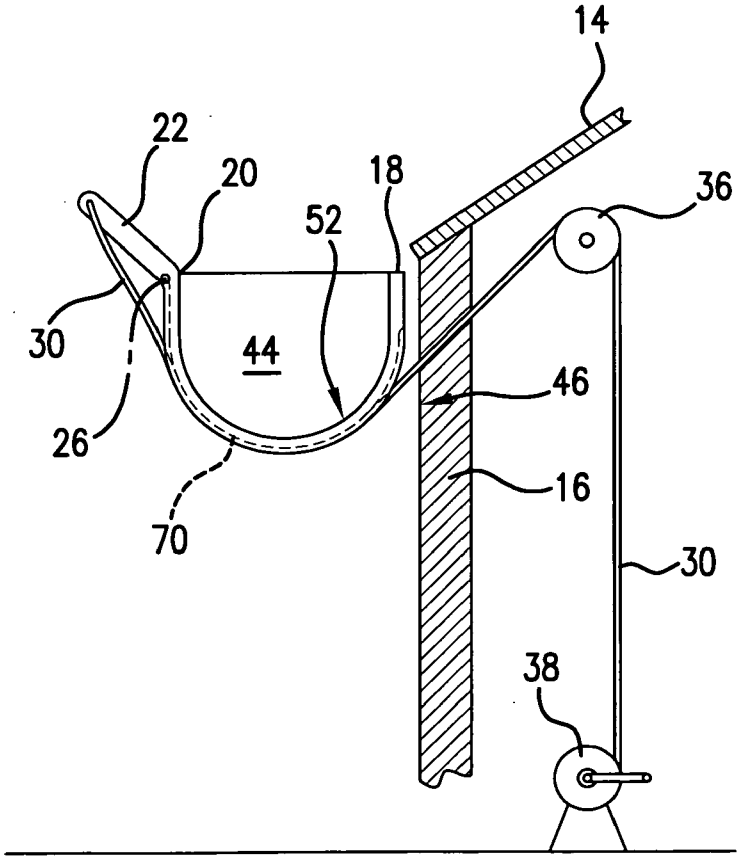

FIG.21

DEBRIS REMOVAL GUTTER SYSTEM

FIELD OF THE INVENTION

[0001] The present invention relates generally to gutter systems. More particularly, the present application involves a debris removal gutter system that includes a channel capable of being rotated so that debris present in the channel can fall therefrom in order to effect a cleaning of the channel.

BACKGROUND

[0002] Gutter systems are used for catching water at the edge of a roof of a structure. Water flowing down the roof will fall into and collect in a channel of the gutter system. The channel may be arranged at an incline so that water present therein will flow along the length of the channel to a desired location. Water may flow out of an end of the channel to the ground below, or may flow out of a downspout placed into fluid communication with the channel so that the water is thus transported to a desired location. Gutter systems are effective in diverting water flow so that water accumulation does not occur adjacent the wall of a structure for eventual damage thereof.

[0003] Channels of gutter systems often become littered with debris such as shingle particles, leaves, branches, trash and the like. One common chore of the homeowner is the removal of debris from his or her gutter system in order to prevent clogging of the gutter system and to ensure normal functioning. The homeowner can access the channel of the gutter system by climbing onto the roof of the structure or by climbing onto a ladder positioned adjacent or onto the channel. Such techniques may result in injury due to a fall from the roof or ladder. Additionally, such cleaning techniques may not be possible by people of limited mobility. As such, there remains room for variation and improvement in the art.

BRIEF DESCRIPTION OF THE DRAWINGS

[0004] A full and enabling disclosure of the present invention, including the best mode thereof, directed to one of ordinary skill in the art, is set forth more particularly in the remainder of the specification, which makes reference to the appended Figs. in which:

[0005] FIG. **1** is a side elevation view of a gutter system in accordance with one exemplary embodiment.

[0006] FIG. **2** is a side elevation view of the gutter system of FIG. **1** in which the channel is rotated into an orientation allowing for the removal of debris therefrom.

[0007] FIG. **3** is a front elevation view of the gutter system of FIG. **1**.

[0008] FIG. **4** is a side elevation view of a gutter system in accordance with another exemplary embodiment.

[0009] FIG. **5** is a front elevation view of the gutter system of FIG. **4**.

[0010] FIG. **6** is a side elevation view of the gutter system of FIG. **4** in which the channel is rotated into an orientation allowing for the removal of debris therefrom.

[0011] FIG. **7** is a top plan view of a gutter system in accordance with another exemplary embodiment.

[0012] FIG. **8** is a cross-sectional view of the gutter system taken along line **8-8** of FIG. **7**.

[0013] FIG. **9** is a cross-sectional view of the gutter system of FIG. **7** in which the channel is rotated into an orientation allowing for the removal of debris therefrom.

[0014] FIG. **10** is a side elevation view of a gutter system in accordance with another exemplary embodiment.

[0015] FIG. **11** is a top plan view of a gutter system in accordance with one exemplary embodiment.

[0016] FIG. **12** is a side elevation view of the gutter system of FIG. **11**.

[0017] FIG. **13** is a side elevation view of the gutter system of FIG. **11** in which the channel has been rotated ninety degrees.

[0018] FIG. **14** is a side elevation view of the gutter system of FIG. **11** in which the channel has been rotated into an orientation allowing for the removal of debris therefrom.

[0019] FIG. **15** is a top plan view of a gutter system in accordance with another exemplary embodiment.

[0020] FIG. **16** is a cross-sectional view taken along line **16-16** of FIG. **15**.

[0021] FIG. **17** is a cross-sectional view of the gutter system of FIG. **15** in which the channel has been partially rotated.

[0022] FIG. **18** is a cross-sectional view of the gutter system of FIG. **15** in which the channel has been rotated into an orientation allowing for the removal of debris therefrom.

[0023] FIG. **19** is a side elevation view of a gutter system in accordance with another exemplary embodiment.

[0024] FIG. **20** is a front elevation view of the gutter system of FIG. **19**.

[0025] FIG. **21** is a cross-sectional view of a gutter system in accordance with another exemplary embodiment.

[0026] Repeat use of reference characters in the present specification and drawings is intended to represent the same or analogous features or elements of the invention.

DETAILED DESCRIPTION OF REPRESENTATIVE EMBODIMENTS

[0027] Reference will now be made in detail to embodiments of the invention, one or more examples of which are illustrated in the drawings. Each example is provided by way of explanation of the invention, and not meant as a limitation of the invention. For example, features illustrated or described as part of one embodiment can be used with another embodiment to yield still a third embodiment. It is intended that the present invention include these and other modifications and variations.

[0028] It is to be understood that the ranges mentioned herein include all ranges located within the prescribed range. As such, all ranges mentioned herein include all sub-ranges included in the mentioned ranges. For instance, a range from 100-200 also includes ranges from 110-150, 170-190, and 153-162. Further, all limits mentioned herein include all other limits included in the mentioned limits. For instance, a limit of up to 7 also includes a limit of up to 5, up to 3, and up to 4.5.

[0029] The present invention provides for a gutter system **10** that includes a channel **12** that can collect and transport water from the roof of a structure. The channel **12** is arranged so that it can be rotated with respect to the structure in order for debris **54** present in the interior **44** of the channel **12** to fall. The channel **12** can be reoriented back into its water catching orientation for subsequent use. The rotation of the channel **12** can be effected in a variety of manners. The channel **12** can be rotated from its water catching orientation such that the interior **44** of the channel **12** faces the portion **46** of the wall proximate to the gutter system **10** or so that the channel **12** faces away from the portion **46** upon rotating the channel **12** to an orientation in which debris **54** therein is capable of falling therefrom.

[0030] One exemplary embodiment of the gutter system **10** is illustrated in FIGS. **1-3**. As shown, the gutter system **10** includes a channel **12** that is rotationally mounted to a mounting member **24** that is in turn connected to a wall **16** of a structure. The gutter system **10** is arranged in such a manner that water flowing from the roof **14** of the structure is capable of flowing into the channel **12** for subsequent transfer to a desired location.

[0031] The channel **12** has a semi-circular cross section, although it is to be understood that the shape and configuration of the channel **12** is only exemplary and that various shapes and configurations are possible in accordance with other exemplary embodiments. The channel **12** is arranged so that an end **18** is located proximate to the wall **16** of the structure when the channel **12** is positioned in the water catching orientation as shown in FIG. **1**. The channel **12** has a remote end **20** that is opposite the end **18** that is positioned remote from the wall **16** of the structure when the channel **12** is in the water catching orientation. An interior surface **52** of the channel **12** extends between the ends **18** and **20** and an interior **44** of the channel **12** is defined. Debris **54** may collect in the interior **44** of the channel **12** though normal operation. Debris **54** can be leaves, branches, material from roof **14**, trash or the like. The debris **54** is problematic in that it may function to prevent the flow of water through the channel **12** or may be transported out of the channel **12** to other areas that may become subsequently clogged with the debris **54** initially present in channel **12**.

[0032] The channel **12** may be reoriented so that it is turned upside down in order to allow debris **54** present in the channel **12** to fall therefrom as shown with reference to FIG. **2**. Although shown as being completely inverted so that the interior surface **52** of channel **12** faces the ground, the channel **12** can be rotated any degree from its water catching orientation so that debris **54** is capable of falling therefrom. For example, the channel **12** may be rotated up to forty five degrees from its water catching position in accordance with certain exemplary embodiments. Alternatively, the channel **12** may be rotated from one hundered and twenty to two hundred and twenty degrees from its initial water catching position in accordance with yet other exemplary embodiments.

[0033] The channel **12** rotates about an axis of rotation **26** that is located at the remote end **20** of the channel **12**. The channel **12** can be rotationally mounted to the mounting member **24** in a variety of manners. For example, a spindle can extend from the channel **12** for receipt within the mounting member **24**. Alternatively, an axle may extend the length of the channel **12** for receipt within the mounting member **24**. Bearings may be used to enhance the rotational connection between the channel **12** and the mounting member **24** in certain exemplary embodiments.

[0034] The gutter system **10** in FIGS. **1-3** includes an engagement member **22**. The engagement member **22** is rigidly attached to the channel **12** so that the relative position between the channel **12** and the engagement member **22** does not change, as may be observed upon comparison of FIGS. **1** and **2**. The engagement member extends upwards and outwards from the channel **12** and has one end of a line **30** attached thereto. A force may be applied to line **30** for subsequent application to the engagement member **22**. For example, a force F, as shown in FIG. **2**, applied to the line **30** causes the engagement member **22** to rotate such that the channel **12** is likewise rotated about the axis of rotation **26**. The channel **12** rotates in the exemplary embodiment illustrated in a direction from the water catching orientation such that the interior **44** of the channel **12** faces away from a portion **46** of the wall **16** proximate the mounting member **24**. The force F may be applied to such a degree that the channel **12** is completely inverted as shown in FIG. **2** so that the debris **54** present can fall out of the interior **44**. The engagement member **22** can be configured so that a desired mechanical advantage is realized upon placement of the attachment point of line **30** a desired distance from the axis of rotation **26**.

[0035] The mounting member **24** is rigidly attached to the wall **16** and does not change positions during rotation of the channel **12**. Any suitable attachment mechanism may be employed. For example, the mounting member **24** may be bolted, stapled, adhered, welded or nailed to the wall **16**. Further, the mounting member **24** may be rigidly attached to the roof **14** and/or wall **16** in accordance with various exemplary embodiments. The mounting member **24** may be fixed to the structure so that it does not rotate or move relative thereto. The mounting member **24** includes a pair of rounded portions that function to more easily allow the line **30** to traverse across the mounting member **24** during rotation of the channel **12**. However, in accordance with other exemplary embodiments the line **30** need not engage the mounting member **24**. The line **30** can be any object capable of imparting a force to the engagement member **22**. For example, line **30** may be a rope, chain, string, cable, or rod in accordance with various exemplary embodiments. The line **30** may be flexible or non-flexible in accordance with various exemplary embodiments.

[0036] A spring **28** may be included in the gutter system **10** and can be connected to both the mounting member **24** and the channel **12**. However, the spring **28** may be connected to other components of the gutter system **10** in other embodiments. The spring **28** biases the channel **12** back into the water catching orientation. As such, release of force F on the line **30** causes the spring **28** to pull the channel **12** from the orientation illustrated in FIG. **2** back into the orientation illustrated in FIG. **1**. However, it is to be understood that the spring **28** need not be present in accordance with other exemplary embodiments. For example, a force may be applied by the line **30** or by another component so that the channel **12** is rotated back into the water catching orientation.

[0037] The gutter system **10** in the exemplary embodiment shown has an end support **42**. the end support **42** functions to stop the rotational movement of the channel **12** once it is flipped from the location shown in FIG. **2** back into the water catching orientation shown in FIG. **1**. In this regard, the channel **12** can rotate clockwise, as shown in FIGS. **1** and **2**, and fall until it hits the end support **42** and stops. The end **18** of channel **12** contacts the upper surface of the end support **42** when the channel **12** is in the water catching orientation. The end support **42** also functions to support the end **18** so that the channel **12** does not sag or otherwise become deformed during use. The end support **42** may be present along the entire length of the channel **12** or may be present along only a portion or portions of its length. End support **42** can be a single component or may be made of multiple components in accordance with various exemplary embodiments.

[0038] Although shown in FIG. **3** as being located on only one side of the channel **12**, various components of the gutter system **10** such as the mounting member **24**, engagement member **22**, line **30**, and/or spring **28** may be included on both sides of the channel **12**. In this regard, mounting members **24**

may be present on both sides of the channel **12** and may be identical in shape and configuration or may be shaped or configured differently from one another. In a similar manner, another line **30** may be included at the opposite end of the channel **12** as shown in FIG. **3** and can be actuated in conjunction with the first line **30** or alternatively to the first line **30** in order to effect rotation of the channel **12**. As such, the gutter system **10** as described herein can have additional, identical or other alternative components located on both sides of the channel **12**.

[0039] The line **30** may be actuated by a user in a number of different manners in order to effect rotation of the channel **12** so that debris **54** can fall therefrom. In accordance with one exemplary embodiment, line **30** extends from the engagement member **22** to ground level or within reach of a person on the ground. The person may simply grasp the line **30** and apply a force F thereto in order to actuate the channel **12**. The user may thus apply a force to the gutter system **10** in order to rotate the channel **12** and thus clean the channel **12** without having to leave the ground. FIG. **10** shows one exemplary arrangement of the gutter system **10** in which the line **30** extends from the engagement member **22** to a winch **38**. The line also extends across a directional pulley **36** that can be mounted to the structure to which the gutter system **10** is employed. A user may manually turn the winch **38** so that line **30** is rolled up thereon. The user can turn the winch **38** until the channel **12** has rotated into a desired position so that debris **54** can fall therefrom. A motor may alternatively be arranged with the winch **38** so that it can be automatically turned in order to take up the line **30**. Winch **38** can be mounted to the side of the structure or may be located onto the ground next to the structure to which the gutter system **10** is employed.

[0040] An additional exemplary embodiment of the gutter system **10** is shown in FIGS. **4-6**. Here, the channel **12** is rotationally mounted to the mounting member **24** that is in turn rigidly arranged with respect to the wall **16**. The axis of rotation **26** of the channel **12** extends through a location that is substantially at the halfway point between ends **18** and **20**. In accordance with certain exemplary embodiments, the axis of rotation **26** is at the midpoint of the channel **12** such that it is equal distance from the ends **18** and **20**. The axis of rotation **26** is located at a position that is below the top of the ends **18** and **20** such that the axis of rotation **26** is located in the interior **44** of the channel **12**. However, other exemplary embodiments are possible in which the axis of rotation **26** is located vertically above the top of ends **18** and **20** when the channel **12** is positioned in the water catching orientation. Still further embodiments are possible in which the axis of rotation **26** is located below the bottom of the channel **12** when the channel **12** is oriented in the water catching orientation.

[0041] A line **30**, that is a chain **60**, is used to impart motion to the channel **12** in FIGS. **4-6**. In this regard, a first gear **32** is mounted onto the channel **12**, spindle extending from the channel **12**, axle or other object such that the first gear **32** turns with the channel **12**. The chain **60** is wrapped around the first gear **32** and extends downwards to a second gear **34**. A crank **62** is located at the ground next to the structure to which the channel **12** is oriented. A user may turn crank **62** in order to rotate the second gear **34** such that chain **60** is moved. Movement of chain **60** is translated into rotation of the first gear **32** such that the first gear **32** in turn rotates the channel **12**. The channel **12** may thus be rotated as desired by the user in order to have debris **54** present therein removed. Although described as being a hand crank **62**, a motor may be incorporated so that the chain **60** may be moved automatically as desired.

[0042] The channel **12** can be rotated in a clockwise direction with reference to FIG. **4**. In this regard, the channel **12** can be rotated from the water catching position so that the interior **44** of the channel **12** faces a portion **46** of the wall **16** proximate to the mounting member **24** once the channel **12** leaves the water catching position and before debris **54** falls therefrom. The direction of rotation in this exemplary embodiment is thus opposite the direction of rotation of channel **12** previously described and illustrated with respect to FIGS. **1-3** and **10**. The channel **12** is capable of rotation so that it can be completely inverted as illustrated in FIG. **6** so that the interior **44** of the channel **12** faces the ground. Once the debris **54** has been adequately removed, the user can reverse the direction of turning of crank **62** so that the chain **60** is moved in a reverse direction. This movement will cause the first gear **32** to turn in the reverse direction so that the channel **12** will be moved back to the water catching position. However, other arrangements are possible in which the crank **62** can continue to be turned in the same direction as it was turned upon moving the channel **12** into the position shown in FIG. **6**. As such, the channel **12** can complete a full 360° turn so that it is once again positioned back into the original, water catching position.

[0043] The gutter system **10** in FIGS. **4-6** can also be arranged so that the channel **12** can initially rotate in the same direction as that previously discussed with respect to the exemplary embodiments in FIGS. **1-3** and **10**. Here, crank **62** can be actuated so that the channel **12**, initially in the water catching position, turns so that the interior **44** of channel **12** faces away from a portion **46** of the wall **16** proximate to where the channel **12** is located. The channel **12** can continue to be turned in the same direction until debris **54** are capable of dropping therefrom. Although shown and described as being completely inverted, it is to be understood that the channel **12** need only be rotated to such a degree that some or all of the debris **54** can fall therefrom. As such, the channel **12** need not rotate a full 180° in accordance with various exemplary embodiments.

[0044] An alternative exemplary embodiment of the gutter system **10** is shown in FIGS. **7-9**. Here, the channel **12** is capable of being rotated about an axis of rotation **26** that is located at the remote end **20** of the channel **12**. The channel **12** is rotationally mounted to and can rotate relative to the mounting member **24**. A spring **28**, that in this instance is a torsion spring, biases the channel **12** into the water catching position. As shown with reference to FIG. **8**, the torsion spring **28** functions to urge the channel **12** about the axis of rotation **26** so that the top of the channel **12** is pushed up against the bottom of an end stop **56**. The position of end stop **56** is fixed with respect to the mounting member **24** and structure to which the gutter system **10** is attached. The end stop **56** can be rigidly affixed to the mounting member **24**, roof **14** or wall **16** in accordance with certain exemplary embodiments. The spring force of torsion spring **28** is such that it urges the channel **12** securely against the end stop **56** and prevents vibration or rattling from occurring.

[0045] When a user desires a self-cleaning function be performed on the gutter system **10**, a motor **40** is actuated in order to turn the channel **12** about the axis of rotation **26**. The motor **40** may be coupled to a spindle, axle or other member that engages the channel **12** and allows the channel **12** to pivot

with respect to the mounting member **24**. The torsion spring **26** can also engage the channel **12** at the spindle, axle or other member that allows the channel **12** to pivot with respect to the mounting member **24**. The motor **40** may be supported by the mounting member **24** and can be actuated at a remote location. For example, a control switch can be located inside of the structure to which the gutter system **10** is installed. The motor **40**, in addition to any of the previously described motors in the present application, can be an electric motor or may be a hydraulic or pneumatic motor in accordance with certain exemplary embodiments. Actuation of motor **40** supplies a turning force to channel **12** sufficient to overcome the torsional bias of the torsion spring **28**. Channel **12** will thus be moved out of the water catching position illustrated in FIGS. **7** and **8** so that the interior **44** of the channel **12** will face a portion **46** of the wall **16** proximate to the channel **12**. The motor **40** can continue to apply a turning force to channel **12** until it reaches a completely inverted orientation as shown with reference to FIG. **9**. At such time, the channel **12** can be held for a predetermined amount of time so that the inner surface **52** of the channel **12** faces the ground and debris **54** is allowed to drop therefrom. In accordance with certain exemplary embodiments, the channel **12** can remain inverted in the position shown in FIG. **9** from fifteen to thirty seconds.

[0046] The motor **40** may be configured so that it stops providing a turning force to the channel **12** to thus allow the channel **12** to be forced back into the normal, water catching orientation shown in FIGS. **7** and **8**. In this regard, the force applied by the motor **40** can be minimized so that the counteracting force of torsion spring **28** is sufficient to overcome the motor **40** force and rotate the channel **12** backwards. Alternatively, a clutch or other component may be utilized in the gutter system **10** to disengage the motor **40** force from the spindle, axle or other member engaging the channel **12** and the mounting member **24**. Once disengaged, the channel **12** will swing in a reverse position due to the application of a turning force from the torsion spring **28**.

[0047] An alternative exemplary embodiment of the gutter system **10** is shown with reference to FIGS. **11-14**. In this exemplary embodiment, the axis of rotation **26** of the channel **12** is located at the remote end **20** of channel **12**. A line **30** is attached to the channel **12** at a location of the channel **12** close to the wall **16**. An engagement member **22** is shown extending from the side of the channel **12** a short distance. The line **30** can be attached to the engagement member **22** through a rigid or rotating connection. A spring **28** is attached to the channel **12** and to the mounting member **24**. In other embodiments, the spring **28** can be attached to the channel **12** and to the structure to which the gutter system **10** is installed. The spring **28** is biased so as to draw the channel **12** against an end stop **56**. In this manner, the top of the end **18** of channel **12** contacts the bottom of the end stop **56** and is prevented from further rotating about the axis of revolution **26**. However, in accordance with other exemplary embodiments, the end stop **56** need not be present. For example, the spring **28** can be arranged so that the channel **12** is pulled against the spring **28** to thus be prevented from further rotating. As shown in FIG. **11**, springs **28** are located on opposite sides of the channel **12**. However, as previously mentioned, certain exemplary embodiments exist in which a spring **28** is located on only one side of the channel **12**.

[0048] A user may grasp line **30** and apply a force F thereon in order to pull the channel **12** from the water catching orientation. FIG. **13** shows the channel **12** after it has rotated approximately 90°. The channel **12** rotates from the water catching orientation so that the interior **44** of the channel **12** faces a portion **46** of the wall **16** proximate to which the channel **12** is mounted. The user may continue to apply a Force F to the line **30** which in turn will pull the channel **12** into the inverted position shown in FIG. **14** so that the interior **44** of the channel **12** faces the ground allowing and debris **54** present in channel **12** to fall therefrom. The spring **28** may be arranged so that once a certain point is reached in the rotation of the channel **12** the spring **28** acts to pull the channel **12** into the inverted position. A second stop **58** is present and is mounted to the mounting member **24**. The bottom of the channel **12** engages the bottom of the second stop **58** and is prevented from further rotating about the axis of rotation **26**. In this position, the spring **28** functions to draw the channel **12** against the second stop **58** and prevent the channel **12** from rotating out of the inverted position. The user may relax his or her grip on the line **30** for a desired amount of time so that debris **54** can fall out of the channel **12**.

[0049] Once the user desires to rotate the channel **12** back into the water catching orientation, a force F may be applied by the user onto line **30**. The user can walk toward the structure or otherwise position the line **30** so that the force F is applied in the direction as shown in FIG. **14**. This application of force F functions to rotate the channel **12** out of the inverted position of FIG. **14**. At a certain point, the force applied by the spring **28** will act to draw the channel **12** back into the water catching position initially illustrated in FIGS. **11** and **12**. At this time, the user may relax his or her grip on the line **30** as the application of force F is no longer needed. The line **30** may be a line that can be grasped by a user as the arrangement requires a change in the orientation of the force F applied to the line **30** depending upon the desired direction of travel of the channel **12**. However, it is to be understood that an appropriate mechanism may be arranged at the ground or on the structure to allow for the line **30** to be actuated in the required directions to enable rotation of the channel **12**.

[0050] The channel **12** may need to be arranged with other elements in the gutter system **10** of the structure so that water falling into the channel **12** can be appropriately directed. For example, a downspout **48** is often employed with cross-channels **12** that lay along the perimeter of the roof **14** of the structure. In one version, the channel **12** may have an open end and the downspout **48** can be located at the open end of the channel **12**. Water in the channel **12** can flow out of the open end of the channel **12** and into the downspout **48** that is located next to the open end of the channel **12**. In this manner, the channel **12** can be rotated while the position of the downspout **48** remains fixed with respect to the structure. In other arrangements, however, the downspout **48** is located at some point along the length of the channel **12** as illustrated, for example, in FIG. **15**. Water may accumulate in the channel **12** on both sides of the downspout **48** and drain therein for subsequent transfer down the downspout **48** to a desired location away from the structure. In such instances, the downspout **48** may be rigidly connected to the structure while the channel **12** is desired to be rotated thus requiring an appropriate connection between these two elements.

[0051] In order to accommodate interaction between the fixed downspout **48** and the rotating channel **12**, a downspout fill-in component **50** can be employed. The downspout fill-in component **50** extends from the mounting member **24** and has a curved portion that fits into the channel **12** so as to in effect form a portion of the interior surface **52** of the channel **12**. The

channel **12** thus has a complete interior surface **52** so that water in channel **12** can be drained into the downspout **48** as desired and does not seep out of the channel **12** at any other part. Rotation of the channel **12** is illustrated in FIG. **17**. Here, the channel **12** rotates about the axis of rotation **26** that is located at the remote end **20**. The channel **12** has an opening or removed portion proximate to the downspout **48** and located between the downspout **48** and the wall **16** of the structure to which the gutter system **10** is attached. This opening thus allows the channel **12** to be rotated so that the fixed downspout **48** does not interfere therewith. FIG. **18** shows the channel **12** rotated into a completely inverted orientation. The downspout fill-in component **50** remains rigidly attached to the mounting member **24** and does not rotate with respect to the channel **12**. The channel **12** can be returned back into the water catching orientation so that the curved portion of the downspout fill-in component **50** is again received into the opening of the channel **12** to thus complete the interior surface **52** of the channel **12**.

[0052] The arrangement described in FIGS. **15-18** can be used with any of the various mechanisms described in the present application that allow the channel **12** to be rotated in order to allow debris **54** to be removed therefrom. However, it is to be understood that the arrangement illustrated in FIGS. **15-18** need not be employed with various exemplary embodiments of the gutter system **10** as desired. In accordance with certain exemplary embodiments, the channel **12** may rotate from the water catching orientation so that the interior **44** of the channel **12** faces away from the portion **46** of the wall **16** proximate to the channel **12**. This direction of initial rotation is opposite to the direction illustrated in the exemplary embodiment in FIGS. **15-18**. In these instances, the downspout fill-in component **50** can be arranged so as to form a portion of the interior **44** of the channel **12** on an opposite side of the downspout **48** from that illustrated in FIGS. **15-18** in order to accommodate the reversed direction of channel **12** movement.

[0053] FIGS. **19** and **20** show another alternative exemplary embodiment of the gutter system **10**. As shown, an end of the channel **12** is mounted to an engagement member **22**. The channel **12** may be welded, integrally formed therewith, or attached to the engagement member **22** through the use of mechanical fasteners in accordance with various exemplary embodiments. The engagement member **22** has a disk shaped portion **64** that has an axis of rotation that is coaxial with the axis of rotation **26** of the channel **12**. The mounting member **24** extends from the structure to which the gutter system **10** is attached and rotationally mounts the engagement member **22** thereto. The axis of rotation **26** of the channel **12** is located between the ends **18** and **20** of the channel **12**. Further, the axis of rotation **26** of the channel **12** is located above the ends **18** and **20** of channel **12**.

[0054] The engagement member **22** includes a projecting portion **66** that extends from the disk shaped portion **64**. An end of line **30** can be attached to the projecting portion **66**. Line **30** may extend from the projecting portion **66** and may engage and be received within a groove on the outer surface of the disk shaped portion **64**. Line **30** can be retained around a directional pulley **36** and may be attached to a winch **38** that is motorized or hand actuated. Alternatively, the line **30** can be simply pulled by a user or arranged in various manners are previously discussed. A force can be applied to the line **30** in order to effect rotation of the channel **12**. In this regard, the channel **12** will be rotated from the water catching orientation so that the interior **44** of the channel **12** faces away from a portion **46** of the wall **16** proximate to the channel **12**. The channel **12** can be continually rotated to a position so that debris **54** may fall therefrom. A spring **28** engages and urges the disk shaped portion **64** back into the water catching orientation. In this manner, force may only be needed to be applied to the line **30** in a single direction to effect rotation. The force can be removed or reduced in degree so that the spring force from spring **28** can urge the engagement member **22** and thus channel **12** back into the water catching orientation.

[0055] The exemplary embodiment illustrated in FIGS. **19** and **20** has a plurality of rollers **68** that engage the bottom of the channel **12**. The rollers **68** can extend from either the mounting member **24** or from the structure to which the gutter system **10** is employed. The channel **12** can have a curved bottom surface to accommodate rotation of the channel **12**. The plurality of rollers **68** support the channel **12** along its length. The rollers **68** can have an axis of rotation that is located directly below the axis of rotation **26** of the channel **12**. In accordance with certain exemplary embodiments, rotation of the channel **12** need not be effected by the line **30** or engagement member **22** which need not be present. Here, the plurality of rollers **68** may be motorized. Actuation of the rollers **68** will cause the channel **12** to be rotated about the axis of rotation **26**. The direction of rotation of the rollers **68** can be reversed in order to swing the channel **12** back into its original position.

[0056] FIG. **21** illustrates an alternative exemplary embodiment of the gutter system **10**. In this exemplary embodiment, the channel **12** has a round outer surface. A groove **70** is present on the outer surface of the channel **12** that is configured for receipt of the line **30**. An engagement member **22** extends from the remote end **20** of the channel **12**. The engagement member **22** may be integrally formed with the channel **12** or may be a separate component that is attached thereto. An end of line **30** is attached to the engagement member **22** in order to urge the channel **12** to rotate about the axis of rotation **26**. The direction of rotation of the channel **12** can be the same as that previously described with respect to the exemplary embodiment shown in FIGS. **1-3** and **10**.

[0057] The groove **70** is provided in order to provide a smooth running of the line **30** across the bottom surface of channel **12** when the channel **12** is rotated in order to remove debris **54**. The groove **70** may extend along the entire outer surface of the channel **12**, or may extend around a portion thereof. For example, the groove **70** can be sized so that it extends around the portions of channel **12** that are contacted by the line **30** during turning of the channel **12**.

[0058] As previously mentioned, the various components of the gutter system **10** are typically shown as being on one side of the channel **12** in the described embodiments. It is to be understood, however, that the various components can be located on both sides of the channel **12** in accordance with various exemplary embodiments. Such an arrangement may provide additional stability to the gutter system **10** or may provide a back up or alternative means of actuation of rotation of the channel **12**.

[0059] While the present invention has been described in connection with certain preferred embodiments, it is to be understood that the subject matter encompassed by way of the present invention is not to be limited to those specific embodiments. On the contrary, it is intended for the subject matter of

the invention to include all alternatives, modifications and equivalents as can be included within the spirit and scope of the following claims.

What is claimed:

1. A gutter system, comprising:

a channel configured for catching water from a roof, the channel configured for having an end located adjacent a wall of a structure and an opposite end located remote from the wall of the structure when the channel is located in an orientation for catching water from the roof;

an engagement member attached to the channel, wherein the relative position between the engagement member and the channel does not change; and

a mounting member configured for at least partially supporting the channel, wherein the channel is rotationally mounted to the mounting member such that the channel is capable of rotating with respect to the mounting member, wherein the channel rotates about an axis of rotation that is located at the remote end of the channel, wherein the engagement member is configured for having a force applied thereto in order to rotate the channel about the axis of rotation from the water catching orientation to an orientation in which debris present in the channel is capable of falling therefrom.

2. The gutter system as set forth in claim **1**, further comprising a line attached to the engagement member, wherein a force is capable of being applied to the line so as to be applied to the engagement member to effect rotation of the channel about the axis of rotation.

3. The gutter system as set forth in claim **2**, wherein the line is a chain, and further comprising at least one gear in communication with the chain, wherein rotation of the gear effects movement of the chain.

4. The gutter system as set forth in claim **2**, further comprising:

a pulley that engages the line and changes the direction of the line; and

a winch that is attached to the pulley and is capable of being turned in order to apply force to the line.

5. The gutter system as set forth in claim **2**, further comprising a motor capable of being actuated in order apply force to the line for subsequent application to the engagement member in order to effect rotation of the channel.

6. The gutter system as set forth in claim **2**, wherein the channel has a round outer surface and defines a groove thereon, wherein at least a portion of the line is disposed in the groove of the channel.

7. The gutter system as set forth in claim **1**, further comprising an end support mounted to the structure, wherein the end of the channel adjacent the wall of the structure when in the water catching orientation rests on top of and is supported by the end support, wherein the channel is configured for being rotated out of the water catching orientation about the axis of rotation in a direction such that the interior of the channel does not face the portion of the wall of the structure proximate to the channel when the channel rotates from the water catching orientation to an orientation in which the interior of the channel is directed downwards.

8. A gutter system, comprising:

a channel configured for catching water from a roof, the channel configured for having an end located adjacent a wall of a structure and an opposite end located remote from the wall of the structure when the channel is located in an orientation for catching water from the roof; and

a mounting member configured for at least partially support the channel, wherein the channel is rotationally mounted to the mounting member such that the channel is capable of rotating with respect to the mounting member, wherein the channel rotates about an axis of rotation that is located at the remote end of the channel;

wherein the channel is configured for being rotated out of the water catching orientation about the axis of rotation in a direction such that the interior of the channel faces the portion of the wall of the structure proximate to the channel after the channel begins to rotate from the water catching orientation to an orientation in which debris present in the interior of the channel is capable of falling out of the interior of the channel.

9. The gutter system as set forth in claim **8**, further comprising:

a spring configured for urging the channel to the water catching orientation; and

an end stop that remains stationary with respect to the mounting member during rotation of the channel, wherein the end of the channel adjacent the wall of the structure when the channel is in the water catching orientation contacts the bottom of the end stop and is prevented from further rotating about the axis of rotation such that the channel remains in the water catching orientation.

10. The gutter system as set forth in claim **9**, wherein the spring is a torsion spring, and further comprising an electric motor capable of applying force to the channel so as to effect rotation of the channel about the axis of rotation.

11. The gutter system as set forth in claim **9**, further comprising a line attached to the channel for imparting a force thereto in order to effect rotation of the channel about the axis of rotation, wherein the line is configured for being grasped by a user for application of a force at least partially towards the wall of the structure, and wherein the line is configured for being grasped by a user for application of a force at least partially away from the wall of the structure.

12. The gutter system as set forth in claim **9**, further comprising a second stop configured for limiting rotation of the channel about the axis of rotation.

13. The gutter system as set forth in claim **8**, wherein the channel is placed into communication with a downspout such that water in the channel is capable of being transferred into the downspout for removal therefrom, wherein the entry point of the downspout is located between the ends of the channel, and further comprising a downspout fill-in component that remains stationary with respect to the mounting member and functions so as to fill-in a portion of the inner surface of the channel when the channel is placed in the water catching orientation.

14. A gutter system, comprising:

a channel configured for catching water from a roof, wherein the channel has a pair of ends with an interior located therebetween;

a mounting member configured for at least partially supporting the channel, wherein the channel is rotationally mounted to the mounting member such that the channel is capable of rotating with respect to the mounting member, wherein the channel rotates about an axis of rotation that is located between the ends of the channel, wherein the channel is configured for being rotated about the axis of rotation from the water catching orientation to an

orientation in which debris present in the channel is capable of falling therefrom.

15. The gutter system as set forth in claim **14**, further comprising:

a gear; and

a chain capable of rotating the gear, wherein rotation of the gear causes rotation of the channel about the axis of rotation.

16. The gutter system as set forth in claim **15**, further comprising a second gear capable of being rotated in order to move the chain so as to effect rotation of the first gear in order to cause the channel to rotate.

17. The gutter system as set forth in claim **16**, wherein the first gear is rotated automatically by a motor.

18. The gutter system as set forth in claim **16**, wherein the first gear is rotated manually by a hand actuated crank.

19. The gutter system as set forth in claim **14**, wherein the axis of rotation is located above the ends of the channel when the channel is in the water catching orientation.

20. The gutter system as set forth in claim **14**, further comprising:

an engagement member rotationally mounted to the mounting member, wherein the axis of rotation of the engagement member is coaxial with the axis of rotation of the channel, wherein the engagement member is rigidly attached to the channel such that rotation of the engagement member effects rotation of the channel, wherein the engagement member has a disk shaped portion the center of which is located at the axis of rotation of the engagement member, and wherein the engagement member has a projecting portion that extends from the disk shaped portion;

a line attached to the projecting portion of the engagement member, wherein the line is capable of having a force imparted thereon in order apply a force to the projecting member so as to effect rotation of the channel; and

a plurality of rollers that are located along the length of the channel and engage the bottom of the channel in order to support the channel when the channel is in the water catching orientation.

* * * * *