United States Patent [19]

Simons

[11] **3,715,880**

[45] **Feb. 13, 1973**

[54] **BATTERY CLOCK WIND DEVICE**

[75] Inventor: **John Roger Simons,** Delavan, Wis.

[73] Assignee: **Bunker Ramo Corporation,** Oak Brook, Ill.

[22] Filed: **June 7, 1971**

[21] Appl. No.: **150,520**

[52] **U.S. Cl.**.....**58/41,** 58/46, 200/35 W

[51] **Int. Cl.**.....**G04c 1/00**

[58] **Field of Search** ..58/41, 46, 48; 200/35 R, 35 W, 200/38 FB

[56] **References Cited**

UNITED STATES PATENTS

3,521,442	7/1970	Umezawg	58/41
3,113,639	12/1963	Koplar et al	58/41 B X
3,267,659	8/1966	Hancock	58/41 B
3,455,103	7/1969	Konno	58/41
3,591,737	7/1971	Marble et al	58/41 A X

Primary Examiner—Richard B. Wilkinson
Assistant Examiner—Lawrence R. Franklin
Attorney—Frederick M. Arbuckle

[57] **ABSTRACT**

An electromechanical rewind device for clock mechanism, in which a rewind motor switch is closed by operating means driven by the spring-powered drive shaft, and means on the rewind gear driven by the motor operates after a predetermined interval of motor operation to drive the switch-operating means in overrun relation to the shaft to release the switch which thus opens and stops the motor.

11 Claims, 3 Drawing Figures

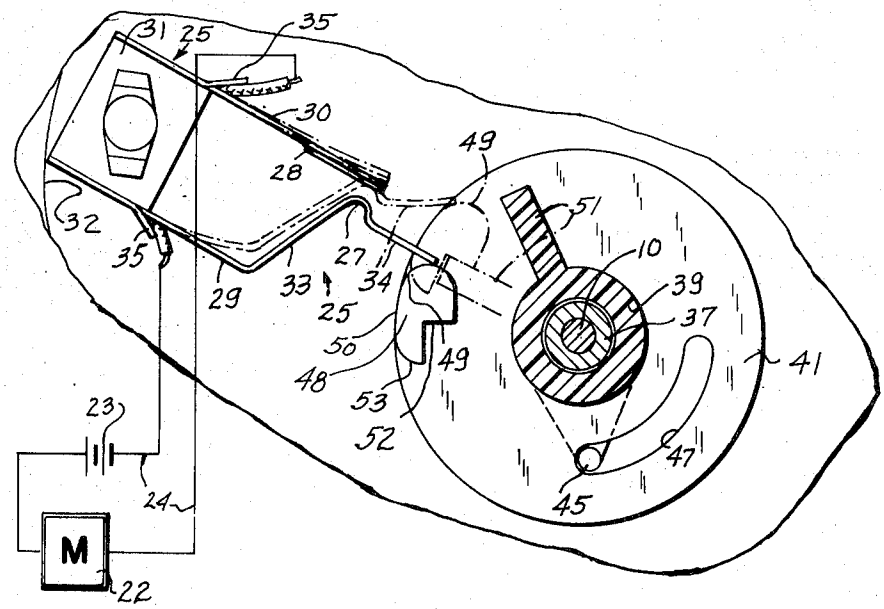

FIG. 2

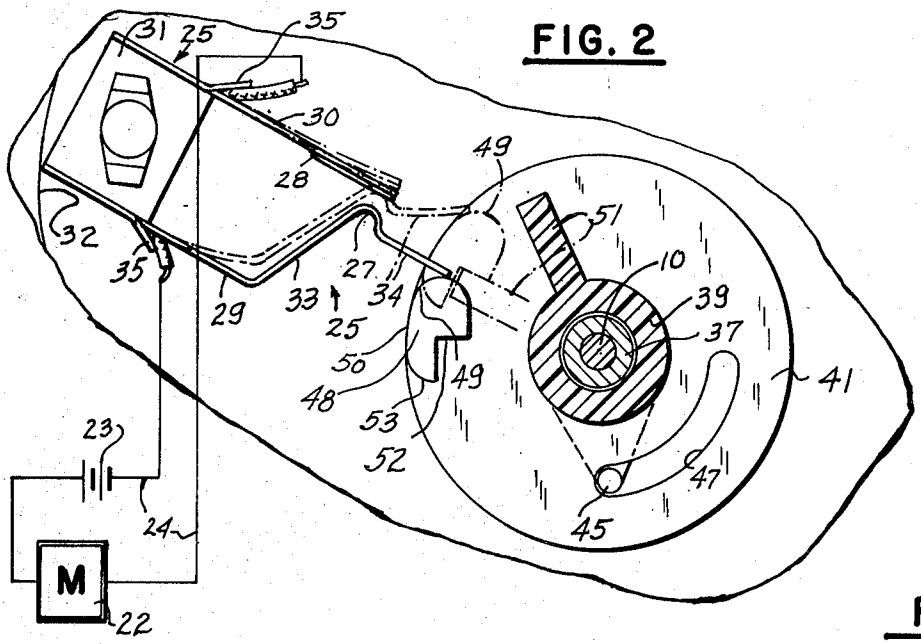

FIG. 3

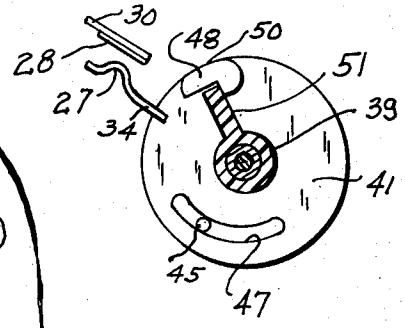

FIG. 1

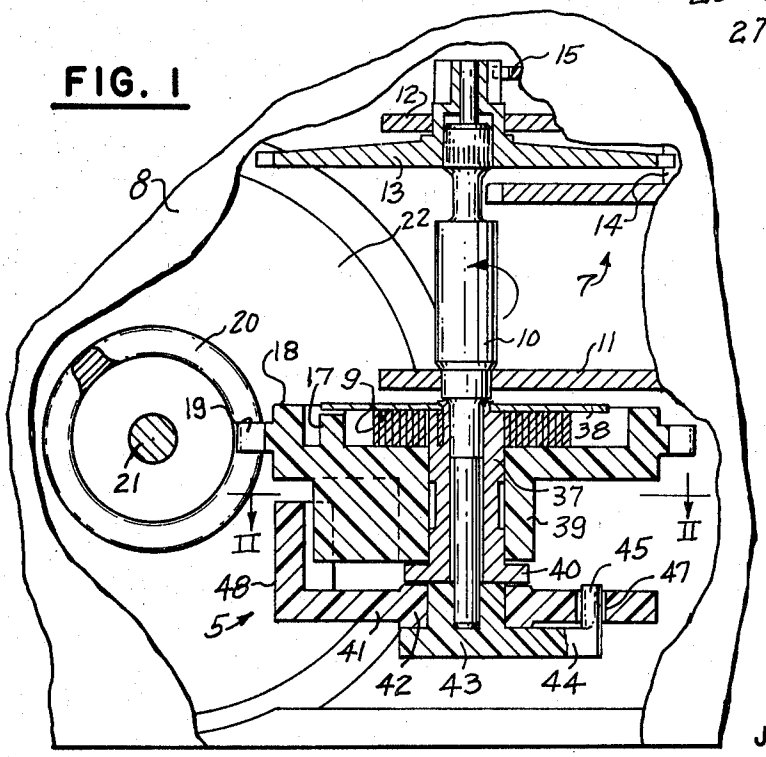

INVENTOR
JOHN R. SIMONS

By

BATTERY CLOCK WIND DEVICE

This invention relates to electromechanical rewind devices for clock mechanism and is more particularly concerned with such a device which will periodically automatically rewind a clock mechanism power spring by means of a battery-powered motor.

Prior art battery-operated clocks fall generally into two categories. One such category may be identified as of the magnetic impulse rewind type, in which the main spring of the clock is rewound to some specified extent through the action of a single coil magnetic solenoid or relay which is energized in response to the closing of a pair of normally open contacts caused to close when the mainspring has unwound to a predetermined degree. A momentary rewinding impulse produced by closing of the contacts also functions to reset the contacts after rewinding to open until the mainspring has again unwound. A particular disadvantage in such magnetic impulse battery-operated clocks is that of the annoying noise produced during the rewinding impulse, generally noticeable as an acoustical "klunk."

A second category of battery-operated clocks may be classified as being of the rotary motor-driven rewind type. In such clocks, the shaft of a small rotary motor is generally coupled via a worm gear in driving relation to the periphery of a main or power spring barrel by means of a gear integral with the periphery of the barrel. In this type of clock a pair of electrical contacts which are spring-biased toward each other, in what may be termed a "normally closed" configuration, are kept separated from each other by means of a cam coupled to the mainspring barrel. One of the contact elements of the contacts is provided with a cam follower portion which normally engages the surface of the cam to maintain the electrical contacts separated from one another until the mainspring is to be rewound. The cam is so configurated that when the mainspring has unwound to a predetermined extent, a depression or relief in the contour of the cam permits the electrical contacts to touch one another thereby applying power to the rotary motor and rewinding the mainspring to the desired extent. A principal disadvantage in this type of rewind device is that of relatively low battery life. This is attributable to the fact that the mainspring in such clock must supply power for not only the clock movement itself, but also sufficient power to overcome the friction between the cam surface and the cam follower portion of the electrical contact means. In dusty environmental conditions friction between the cam follower portion of the contact means and the cam can, over a period of time, add to the energy demand upon the battery. Another problem typical of this type of clock is that of the electrical contact means having relatively short life owing to the fact that the contacts tend to bounce when the cam follower is abruptly relieved by a relief in the mainspring cam, thus permitting the contacts to snap together and bounce to an extent causing arcing and pitting of the contacts. Electrical contact life is further reduced by the arcing which is encountered between the contacts as they are slowly moved apart from one another by the slowly rising portion of the cam at the end of the rewind cycle. Further, since the rate at which the contacts are separated is a function of the battery voltage, as the battery voltage drops the speed of the motor is reduced, thereby reducing the rotational speed of the mainspring cam, hence tending to prolong any arcing that takes place and increasing the attendant pitting effect on the contacts. Furthermore, the maximum force between the electrical contacts when they are permitted to touch one another is fixed by the characteristics of the spring metal blades to which the contacts are mounted, and any dust or oxide which develops on the surface of the contacts may eventually prevent the contacts from providing an electrical path of sufficiently low resistance to operate the motor. When the cam permits the contacts to touch one another or close the switch, the position on each contact at which it touches the other contact remains substantially the same over repeated rewind cycles, so that wearing or oxidation of the contacts at these localized positions may result in the contacts eventually failing to provide a sufficiently low electrical contact resistance to enable the rotary motor to rewind the mainspring. Considerable manufacturing cost is encountered by reason of the delicate time-consuming manual adjustment which is required at the contact elements after final assembly of the clock.

An important object of the present invention is to overcome the foregoing and other disadvantages, defects, inefficiencies, shortcomings and problems in prior art structures, and to attain important advantages and improvements in electromechanical rewind devices for clock mechanism.

Another object of the invention is to provide a new and improved electromechanical rewind device for clock mechanism having novel fail-safe rewind motor controlling switch means and anti-overwind means for operating the switch means.

Still another object of the invention is to provide new and improved switch-operating means for electromechanical rewind devices for clock mechanism assuring snap-action separation of the switch contacts.

A still further object of the invention is to provide a new and improved electromechanical rewind device for clock mechanism providing assurance of proper functioning of the switch which controls the electrical rewind motor.

A yet further object of the invention is to provide a new and improved electromechanical rewind device for clock mechanism, wherein load upon the mainspring for operating the electrical rewind motor control system is greatly minimized, thus enabling use of a relatively weak spring and minimizing rewind torque so that battery life is extended.

Other objects, features and advantages of the invention will be readily apparent from the following description of a preferred embodiment thereof, taken in conjunction with the accompanying drawing, although variations and modifications may be effected without departing from the spirit and scope of the novel concepts embodied in the disclosure, and in which:

FIG. 1 is a vertical sectional elevational view of a representative electromechanical rewind device associated with a clock mechanism;

FIG. 2 is a sectional plan view taken substantially along the line II—II of FIG. 1;

FIG. 3 is a schematic illustration similar to FIG. 2 but showing the parts in another operative relation.

An electromechanical rewind device **5** providing a representative embodiment of the invention is constructed and arranged to function with a clock movement **7** which includes some form of escapement means and is housed within a casing **8**. Mechanical power for operating the clock movement is provided by a coiled mainspring **9** having its inner end anchored to an arbor or drive shaft **10** journalled in and between spaced parallel frame bearing members **11** and **12** of the clockworks with a gear fixed on the shaft providing a journal therefor in the bearing plate **12**. A large diameter portion of the gear **13** meshes with a pinion **14** of the clockworks and a small diameter portion of the gear meshes with a gear **15** of the works, thereby motivating the clockworks through spring power imparted to rotate the shaft **10**. Typically, the spring **9** is initially wound to a level of about four turns relative to shaft **10**.

To enable winding of the spring **9** and to maintain torque load on the wound spring, its outer end is anchored as by means of an anchor stud **17** in a spring barrel **18** in the form of a barrel-recessed windup wheel having on and about its perimeter gear teeth **19** preferably in a form to mesh with a driving worm **20** corotatively mounted on a drive shaft **21** of a rotary electrical motor **22** which is desirably of a small voltage type suitable for the purpose adapted to be driven by an electrical energy source such as a battery **23** in an electrical circuit **24** controlled by a switch **25** (FIG. **2**).

The arrangement is such that after a predetermined rotation of the shaft **10**, preferably one turn, the motor **22** is energized to drive the windup gear wheel **18** for rewinding the spring **9** one turn. To this end, the switch **25** is constructed to be normally biased into open condition. It is so related to the shaft **10** that switch-operating or closer means driven by the shaft will periodically at predetermined shaft rotation intervals close the switch to energize the motor, thereby turning the wheel **18** with spring winding torque until a trip device on the wheel trips the switch to stop the motor. This spring rewinding action takes place with cyclical regularity automatically as long as electrical energy continues to be available in the circuit **24**. In an advantageous form, the switch **25** is constructed to possess a number of valuable features for this intended purpose. It is adapted to be closed without mechanical bounce, whereby arcing and pitting and ultimate deterioration of the contacts is avoided. It requires no energy from the mainspring except for an extremely brief time interval involved in closing of the switch whereupon motor power takes over until rewinding of the spring has been completed. The switch contacts are in engagement with increasing contact pressure as the rewind cycle progresses, and with a mutual wiping action so as to assure a sufficiently low resistance electrical path to maintain the electrical circuit closed to operate the motor. It requires no adjustment or prealignment or close tolerances. It functions in a direct electrical path without energy leakages through clockwork frame or mounting structure, and it opens with a fast-break or snap action even with low battery voltage and low motor speed. To this end, the switch **25** comprises a pair of normally open contacts comprising a positive contact **27** and a negative contact **28** which are respectively carried by spring arms **29** and **30** operatively mounted on a dielectric supporting base or post **31** mounted on a supporting frame member **32** of the clockwork. For maximum efficiency, the contact arms **29** and **30** are constructed of thin leaf spring material such as tough spring tempered phosphor bronze and of a length and width which will enable relatively easy resilient cantilever yielding displacement across the plane of the arm but will effectively resist displacement in the respective arm plane.

Closing of the switch **25** is effected by cantilever resilient bending of the positive arm **29** toward the negative arm **30** to press the contact **27** against the contact **28**. To accomplish this with utmost efficiency, the arms **29** and **30** are secured on the post **31** to be in substantial spaced relation with the main body portions extending generally coextensively from the mounting post. While the negative contact arm **30** preferably extends straight away from the mounting post, the positive arm **29** extends straight from the post a limited distance and is provided with an oblique portion **33** directed toward the negative contact **28**, with the positive contact **27** comprising a generally reverse radius bend providing a radial wiping contact surface on an axis transverse to the longitudinal axis of the arm and parallel to the major plane of the arm. To enable deflecting of the arm **29** and more particularly the contact **27** toward and into engagement with the contact **28**, a free or distal end portion finger projection **34** is provided on the arm **29** which extends beyond the distal end of the negative contact arm **30** and is substantially offset by the indentation of the contact **27** to remain in spaced relation and free from the distal end portion of the arm **30** when resiliently deflected into switch-closing relation by pressure applied in the closing direction to the extremity of the finger. For maximum efficiency, the negative contact is elongated in the direction of the length of the arm **30** to enable a substantial range of wiping engagement by the contact **27** when resiliently deflected thereagainst, with consequent resilient yielding cantilever deflection of the arm **30** by pressure applied from the arm **29** through the contact **27**. In a desirable form, the negative contact **28** may comprise a longitudinal contact rib formed in the arm **30** and projecting toward the contact **27**. By virtue of the substantially point contact thus provided by and between the contacts **27** and **28** firm, positive electrical contacting engagement is assured in the closing operation of the contact with minimal chance of spark gapping or dirt or corrosion interference with electrical energy transmission through the closed contacts. Attachment of the electrical leads of the circuit **24** to the switch arms **29** and **30** is desirably through respective integral terminals **35** on the body portions of the arms fixedly fastened to the contact post **31**.

Closing of the switch **25** during suitable rewind cycles at predetermined intervals in spring-powered revolutions of the drive shaft **10** such as once in every complete revolution of the shaft, which may occur in a typical battery-operated household or automobile clock every 8 minutes but will, of course, be determined by the nature of the clockwork or movement, is effected by switch-operating means mounted for movement relative to the switch, and more particularly as driven by the shaft. Accordingly, the shaft **10** is provided with a bushing **37** (FIG. **1**) fixed corotatively

thereon and which may also serve as the means for anchoring of the inner end of the spring 9, while a retaining disk 38 affixed to the bushing overlies the spring to retain it within the barrel recess, the disk being of a diameter sufficient to overlie the spring anchor post or stud 17. This bushing 37 serves as a bearing for the rewind gear wheel 18 which is freely rotatable thereon and has a tubular hub extension 39 about the bushing which is provided with a lateral flange 40 opposing the distal end of the hub. Mounted relatively rotatably on and about the end portion of the shaft 10 which projects outwardly beyond the flanged end 40 of the bushing 37 is a dielectric disk member 41 having a hub 42 journalled on a retainer flange 43 fixedly secured co-rotatively with the shaft end.

Normally, the disk member 41 is driven corotatively with the shaft 10 by means of a lost motion coupling with the retainer flange 43 which, for this purpose, is provided with a radial arm 44 having a generally axially extending driving lug 45 which extends into an arcuate lost motion slot 47 in the disk 41. Thereby, as the shaft 10 rotates, the lug 45 engaging the disk 41 at the end of the slot in the direction of rotation drives the disk 41 corotational with the shaft so that in each full rotation of the disk a switch-closing cam 48 will engage the tip of the switch arm 34 which is mounted to project into the path of the cam. In a desirable form, the switch-closing cam 48 comprises an integral boss projection on the margin of the disk 41 extending toward but spaced from the adjacent margin of the windup gear wheel 18. On its leading side, the cam member 48 has a switch finger engaging surface 49 effecting minimum frictional contact with the side edge of the tip of the finger 34 engaged as the cam advances against the finger with corresponding resilient yielding bending of the switch arm 29 with not only a component of movement toward the switch arm 30, but also a swinging away from the cam 48 as enabled by the diagonal extent 33 of the switch arm as indicated in dot-dash outline in FIG. 2 showing the relationship of parts at the moment of switch contact engagement. During this progressive switch-closing movement, the cam surface 49 maintains the minimal frictional engagement with the tip of the switch finger 34. Then as the switch closer 48 continues to advance as driven in the regular working rotation of the spring-driven shaft 10, the finger 34 is pushed ahead a limited distance, effecting a firm wiping engagement of the contacts 27 and 28 with progressively increasing pressure until the tip of the finger 34 engages a radially outermost cam surface 50 which is formed on the radius of and coincident with the perimeter of the disk 41.

At the moment of electrical engagement of the contacts 27 and 28, the motor 22 is energized and drives the gear wheel 18 in a spring-winding revolution which is substantially more rapid than the revolving motion of the shaft 10. As the rewind cycle is almost complete, means on the rewind gear wheel are operative to move the switch operating cam 48 out of the switch-closing position to thus stop the motor and terminate the spring-winding cycle. For this purpose, the wheel 18 carries an integral tripper lug 51, desirably in the form of a radially extending vane which is constructed and arranged to engage in a re-entrant or rabbet seat groove 52 in the cam 48 deep enough to receive the vane in squared-up radial coupled engagement for efficient driving of the cam by the vane and forcing of the cam past the switch finger 34 without any interference from the vane with snap action springing open of the switch arm 29 relative to the switch arm 30. For this purpose, the cam 48 is provided, also, with a receding clearance surface 53. As a result, as is demonstrated in FIG. 3, as the vane 51 advances the cam 48 to clearance relation with respect to the switch finger 34, the finger escapes the cam 48 with a snapping action to open the switch, stop the motor and terminate the rewind cycle. For this purpose, the slot 47 provides ample lost motion clearance to enable overrunning of the disk 41 relative to the shaft 10 as impelled by action of the tripper lug 51 on the cam 48 to terminate the windup cycle. Then, as the shaft 10 continues its uninterrupted clockwork movement driving rotation, the gear wheel 18 is held stationary by the now dormant worm 20 while the driving lug 45 continues to advance with rotation of the shaft 10 until it again engages in the leading end of the lost motion slot 47 and advances disk 41 and thus the cam 48 until the rewind cycle is again initiated.

The system of the preferred embodiment of this invention provides a fail-safe spring wind and also overwind protection. In construction, the contacts 29 and 30 are stiff enough so that when the battery supplying energy to drive motor 22 is too weak to wind the gear 18 the spring 9 will not wind completely down. When the battery ultimately reaches that state, the spring 9 will drive abutment cam 50 against switch blade 29 closing the now ineffective motor circuit. If spring contacts 29,30 were to yield enough to permit abutment 50 to pass (as happens when motor 22 operates) then the spring 9 would run down after about 3 or 4 turns. Subsequently, upon insertion of a new battery the motor would, at best, only rewind the spring 9 one turn. Henceforth, the clock would operate at a low, non-design, drive torque. At worst, the spring 9 might have run down with contacts 27,28 not closed, and in that event, insertion of a new battery would not restart the clock.

Accordingly, springs 29,30 are made stiff enough to hold abutment 50 against passage unless driven past by motor 22. This fail-safe assures the original minimum of 3 or 4 turns of the spring 9 being maintained until a new battery is installed, and thereby insures restart and subsequent design torque operation.

Overwind protection is provided also. If contacts 27,28 were to vibrate together occasionally, sufficient to drive member 51 around into contact with abutment 50, no further wind of spring 9 can occur. At that point, any further motor drive will merely operate as a direct motor drive of shaft 10. Tests of my device show that the clock continues to operate satisfactorily under such drive condition. While such operation will rarely occur, this protection against overwind is important to universally successful operation.

It will thus be apparent that the present invention provides an efficient, simple, durable, long-lived electromechanical rewind device for clock mechanism, preventing mainspring rundown, preventing multiple wind, attaining maximum yield from low voltage battery energy inasmuch as power is not robbed from the mainspring nor the time-keeping mechanism. Power from the mainspring is required by the device only for the minimal effort of deflecting the positive switch arm

into contact closing position, whereupon motor power continues and completes the rewind cycle. Long battery life is assured even though only low voltage energy is supplied, for long, carefree, automatic clock operation.

It will be understood that variations and modifications may be effected without departing from the spirit and scope of the novel concepts of this invention.

I claim as my invention:

1. In a clock mechanism which has a mainspring providing torque to a drive shaft, and motor means adapted to wind said mainspring, said mechanism having an operating sequence consisting of a relatively brief wind cycle in which said motor means is actuated and a relatively long unwind cycle, the combination of:

switch means for energizing the motor means from a power source, said switch means comprising two electrical conductors, one physically biased away from the other, said switch means thereby comprising an electrically normally open switch when not engaged,

cam means driven by the drive shaft, including a cam surface positioned relative to said switch for mechanically engaging said switch, initially closing the same and energizing the motor means, all at the end of an unwind cycle, said cam means being otherwise free of engagement with said switch for the major portion of said unwind cycle, and

means driven by said motor and active at the end of the rewind cycle for moving said cam surface first into further engagement with and later out of engagement with said switch, thereby permitting the switch to resume its open condition and deenergizing said motor means.

2. Apparatus according to claim 1, wherein the structure of said switch means is such that the mechanical force required in the further engagement of said switch by said cam surface after initially closing said switch exceeds the mechanical force which the mainspring normally provides through said drive shaft, whereby upon failure of the power source the switch means normally remains in a closed condition.

3. An electromechanical rewind device for clock mechanism including a drive shaft and a main power spring having one end drivingly connected to the shaft and its opposite end drivingly connected to rewind means operatively coupled with driving means of a normally idle electrical motor, comprising:

means for electrically powering said motor including an electrical circuit and a control switch normally biased into open condition, said switch comprising a pair of normally spaced-apart switch arms each of which has an electrical contact;

switch-operating means mounted for movement relative to said switch and operative to deflect one of said arms toward the other of said arms to effect closing engagement of said contacts;

means driven by said shaft for moving said switch-operating means after an interval of spring-driven rotation of said shaft and with energy supplied by said spring, to close said switch for energizing the motor to drive said rewind means; and

an element actuated by said rewind means and operative after a predetermined amount of motor operation to move said switch-operating means, causing further deflection of said one of said arms and subsequently releasing said one of said arms, thus opening said switch to stop the motor, the force required for said further deflection being greater than normally obtained through said shaft-driven means from said spring.

4. A device according to claim 3, including a dielectric switch arm support, said arms having body portions fixedly secured to said support and thereby maintaining said arms in spaced generally coextensive relation, one of said arms being longer than the other of said arms, and said switch-operating means engaging said longer of said arms and thrusting it toward the other of said arms to effect switch-closing engagement of said contacts.

5. A device according to claim 4, said longer of said arms having an intermediate indentation providing the contact thereof.

6. A device according to claim 5, the other of said arms having a longitudinal rib providing the contact thereof and engageable by said indentation contact with substantially point engagement.

7. A device according to claim 6, said longer of said arms having a diagonally directed intermediate portion slanting toward said other of said arms and enabling wiping action of said contact when the longer of said arms is deflected toward the other of said arms by pressure of said switch-operating means against the distal end portion of said longer of said arms toward said other of said arms.

8. In a battery operated clock mechanism,

a clock movement having a mainspring adapted to be wound to a first degree of tension for powering the operation of said clock movement throughout a designated time period, at the end of which said mainspring assumes a second degree of tension

motor means coupled to said clock movement for winding said mainspring upon energization of said motor means

normally open electrical switch means adapted to be closed by physical engagement with a mechanical member, said switch means being coupled with said motor means for conditionally energizing the same from a power source upon closure of said switch means

cam means coupled to said clock movement and positioned relative to said switch means so as to be out of engagement therewith during a major portion of said designated time period, said cam means including a mechanical member which initially engages said switch means only at the end of said designated time period for closing the same, energizing said motor, winding said mainspring from said second degree of tension to said first degree of tension, and thereafter disengaging said switch means.

9. In combination with a clock mechanism including a drive shaft and means supporting the shaft rotatably, the shaft having driving gear means thereon for actuating the clock mechanism, a mainspring operatively connected at one end to the shaft and at its opposite end to a rewind wheel relatively rotatably mounted on the shaft and having a driving coupling with a normally idle electrical motor, the improvement comprising:

a rewind device comprising a member having a driving coupling with the shaft but capable of a limited range of overrun relative rotary movement with respect to the shaft;

a switch-operating cam on said member;

a motor-operating circuit including a normally-open resilient switch element mounted to be moved to closed position by said cam as moved by its coupling with the shaft; and

tripping means carried by said wheel and travelling therewith, when the wheel is rotated on the shaft to wind the spring, to overtake said cam and drive it for further deflecting and then releasing said switch element to open position at termination of a rewind cycle as permitted by the overrunning capability of said member, the force required for said further deflection being greater than can be provided through said cam by said mainspring.

10. A combination according to claim **9**, said resilient switch element and a mating element therefor comprising spring arms of substantial length and resilient flexibility, said cam pressing said arms together with increasing pressure as the cam progresses in movement past the ends of said arms as propelled by the tripping means and the arms springing apart with a snap-action breakaway upon release from said cam.

11. A combination according to claim **10** wherein said mainspring is initially wound with more than one turn and wherein said contacts are stiff to prevent passage of said cam unless driven by said motor.

* * * * *