F. E. NORRIS.

HANDLING AND SHIPPING METAL BARS.

APPLICATION FILED JULY 6, 1915.

1,261,155. Patented Apr. 2, 1918.

FIG. 1

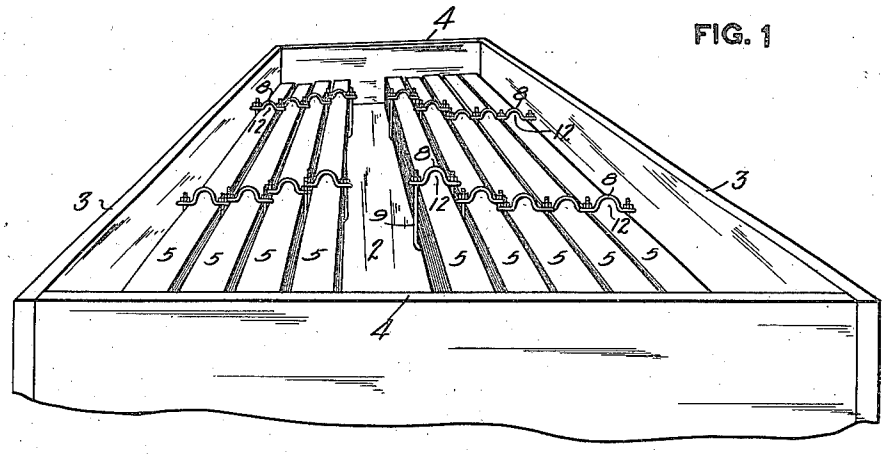

FIG. 2

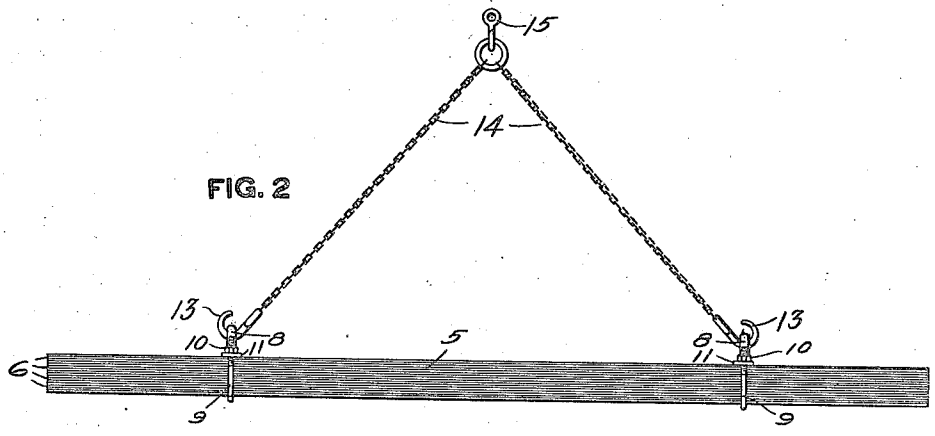

FIG. 7

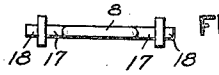

FIG. 4

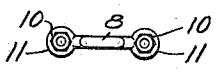

FIG. 5

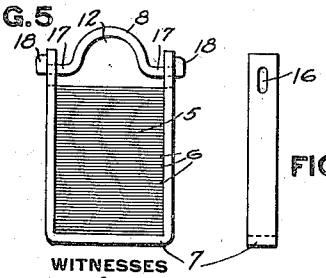

FIG. 6

FIG. 3

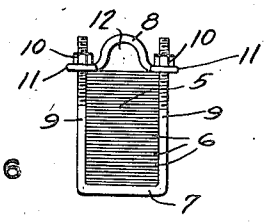

WITNESSES

R. D. Little

W. J. Hohman

INVENTOR

Francis E. Norris

by C. C. Linthicum

his Attorney

UNITED STATES PATENT OFFICE.

FRANCIS E. NORRIS, OF SHARON, PENNSYLVANIA.

HANDLING AND SHIPPING METAL BARS.

1,261,155. Specification of Letters Patent. Patented Apr. 2, 1918.

Application filed July 6, 1915. Serial No. 38,377.

To all whom it may concern:

Be it known that I, FRANCIS E. NORRIS, a citizen of the United States, and resident of Sharon, in the county of Mercer and State of Pennsylvania, have invented certain new and useful Improvements in Handling and Shipping Metal Bars, of which the following is a specification.

My invention provides certain new and useful improvements whereby a series of sheet or tin bars or similar long, thin and flexible rolled metal materials, assembled in a pile, are fastened and held in assembled or piled position while being handled during loading and unloading operations, and during shipment thereof from place to place within a railway freight car.

Heretofore it has been the practice to handle such materials in loose piles, chain slings being employed in lifting the piles of loose bars during the loading and unloading operations, and the loose piles being braced within the car in which they are shipped to prevent displacement of the individual bars of the piles, and to prevent shifting of the piles within the car.

When loaded in this manner it is a frequent occurrence for the bracing to give way or break and as a result not only is the position of the piles of bars shifted within the car during the transportation of the bars therein, but the individual bars become dislodged and disarranged within the car so as to entail considerable delay in unloading, and this adds materially to the cost of handling.

Trouble has also been experienced in stocking the bars and in handling loose piles of the bars in the loading and unloading operations, on account of the liability of relative movement of the bars forming each pile.

One object of my invention is to provide for fastening together a pile of bars and for maintaining them in assembled relation during shipment thereof in railway cars and while being loaded and unloaded, and when in stock.

Another object of the invention is to provide for slinging the pile of bars from a traveling crane or other hoisting apparatus in handling the piles of bars during loading and unloading operations.

A still further object of the invention is the provision of the novel construction and arrangement of parts shown in the drawing and more fully described hereinafter, and specifically pointed out in the appended claim.

Referring now to the drawing forming part of this specification, Figure 1 is a perspective view showing the body of a railway freight car loaded with piles of bars fastened together in accordance with my invention.

Fig. 2 is a longitudinal side elevation showing a pile of tin or sheet bars as fastened together and suspended from the trolley hook of a traveling crane or other hoisting apparatus in accordance with my invention, during the car loading and unloading operations.

Fig. 3 is a sectional end elevation on a larger scale of the pile of bars as fastened together in accordance with this invention.

Fig. 4 is a plan of the eye bar forming part of the fastening means shown in the preceding figures.

Fig. 5 is a sectional end elevation, similar to Fig. 3, showing a modified and preferred form of the apparatus used in fastening a pile of bars.

Fig. 6 is a side elevation of the apparatus shown in Fig. 5.

Fig. 7 is a plan of the eye bar of Figs. 5 and 6.

In the accompanying drawing, the numeral 2 designates the body of a freight car of the gondola type having sides 3, 3, and ends 4, 4, and loaded with a series of piles 5 of sheet or tin bars, the bars being fastened together in piles and the fastened piles being assembled within the car, in accordance with my invention.

As shown, a series of the flat rolled steel bars 6 form each pile 5, and the bars forming each pile are securely fastened together by the U-bolts or straps 7 and eye bars 8, generally, two of the U-bolts and eye bars being employed in fastening each pile. Obviously any desired number may be employed.

In the construction shown in Figs. 3 and 4, the ends of the parallel sides 9, 9, of the straps 7 are screw threaded and have nuts 10 thereon to fasten the eye bars 8 on the bolts. The eye bars 8 have an opening 11 on each end through which the screw threaded ends of the U-bolts 7 extend and the openings 11, 11, are connected by an integral, reversely curved body which is formed so that the body portion adjacent to each opening 11 is in holding engagement with the top surface of the top bar 6 in a pile of the bars, while the reversely curved portion forms an eye or loop 12 through which the hooks 13 of a lifting chain 14 pass in suspending the piles from the crane hook 15 of a hoisting crane, derrick, or other lifting mechanism.

In preparing the piles 5 for shipment, the bars 6 are stacked with the desired number placed one upon the other, usually by means of a mechanically operating bar piler.

The U-bolts 7 and eye bars 8 are then applied to the piles at convenient points in the length thereof. With the construction of Figs. 3 and 4 the nuts 10, 10, are screwed upon the threaded ends of the U-bolts 7 so as to fasten the bars of each pile and form a unit 5 composed of a plurality of bars. The number of U-bolts 7 used in fastening the pile of bars together will depend upon the length of the tin or sheet bars and number of these bars in the pile, but ordinarily two of the U-bolts 7 located about as shown will be sufficient.

In the construction shown in Figs. 5, 6 and 7, the U-bolt or strap 7 is made of a flat bar and instead of having screw threaded ends, each end of the strap 7 is provided with a transverse opening 16. The eye bars 8 have a body portion bent as in the eye bars of Figs. 3 and 4, and integral end portions 17 provided with hooks 18. The hooked ends 18 of this eye bar extend through the openings 16 in the ends of the U-bolts 7 to secure the straps to the pile of bars.

As the piles 5 are formed they are lifted by a suitable hoisting mechanism and are placed in a car 2 for shipment. In loading the piles, hooks 13 on the ends of chains 14 which are suspended from the crane hook 15 of a hoisting mechanism, are inserted in the eyes or loops 12 of the eye bars formed by the reversely bent body portion thereof, and the piles 5 are readily lifted thereby and placed in the car.

A sufficient number of piles 5 are placed within the car to fill the car, or to load the car to its maximum capacity. Ordinarily, the weight and height of a pile of bars will be sufficient to prevent tipping of a pile within the car during shipment and the U-bolts will effectively prevent relative displacement of the series of bars in each pile. When desired, however, the piles may be braced within the car.

On reaching its destination the car 2 is unloaded by reversing the loading operations which have been described. In the unloading operations, the hooks 13 on the chains 14 suspended from the trolley hook 15 of the crane or other hoisting mechanism are secured in the loops 12 formed by the bent eye bars 8 on the U-bolts 7, and each pile 5 is lifted as a unit from the car and deposited in the desired location. The U-bolts may then be removed and the loose piles of bars are then in readiness to be separated and separately removed to a shear or other place of use, or the clamps may be left on the bars for an indefinite time while stocked, or until such time as it is desired to use the individual bars.

The advantages of my invention will be apparent to those skilled in the art. By the use of my invention the bars are formed in piles of convenient size for shipment and are securely held in piled position during shipment thereof and while being handled in loading and unloading. The U-bolts used in securing the bars in piles form convenient means for slinging the piles from the crane in handling the piles in the loading and unloading operations. Further, by keeping the clamps on the bars in the consignee's stock piles greater safety is secured to those working around the same, as the loose piles not infrequently tipple or slide over.

From the foregoing description, it will be understood that the present invention provides a metallic package made up of a plurality of plates, sheets or bars piled upon one another, such pile of plates, sheets or bars being embraced by a clamp which is in snug engagement with all four sides of the pile, while the clamp is provided with an eye which is designed to be engaged by a hoisting apparatus, whereby the package may be conveniently handled. The clamp, of course, maintains the plates, sheets or bars of the pile in compact relation so as to provide a package which may be handled as an entirety and which may be maintained as a package until it is desired to use or have access to the individual plates, sheets or bars, when the clamp may be conveniently removed, or the cross bar removed and the plates, sheets or bars taken out of the U-shaped clamp.

Modifications in the construction and arrangement of the invention may be made without departing from my invention as defined in the appended claim.

I claim:—

In apparatus for handling and shipping flexible metal bars, the combination with a

pile of bars, of U-shaped straps embracing the pile adjacent to the ends thereof, and an eye bar detachably secured to each strap and coacting therewith to hold the pile of bars in assembled relation, said eye bars having end portions engaging with the U-shaped straps and reversely bent intermediate portions forming loops adapted to receive the chain hooks of a sling whereby the piles are lifted in handling the bars in piles.

In testimony whereof, I have hereunto set my hand.

FRANCIS E. NORRIS.

Witnesses:
C. W. CUNNINGHAM,
I. G. SCHLESINGER.