(No Model.)

I. V. COOPER.

SPOOL HOLDER.

No. 456,083. Patented July 14, 1891.

Fig 1

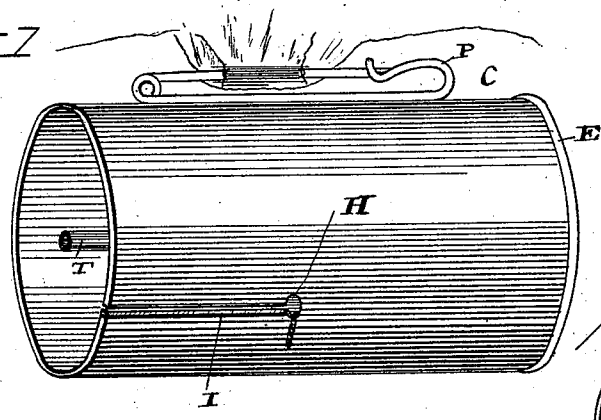

Fig 5

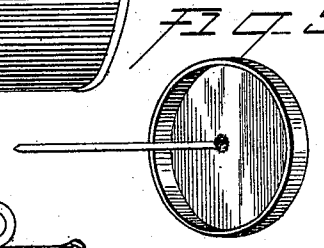

Fig 2

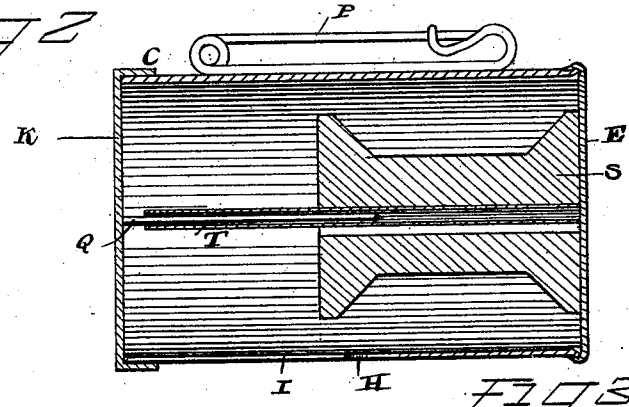

Fig 4

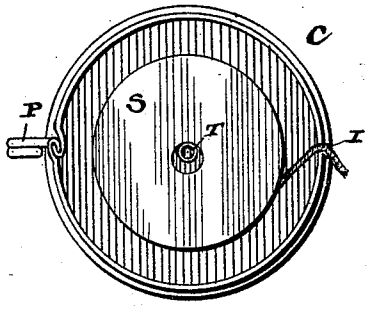

Fig 3

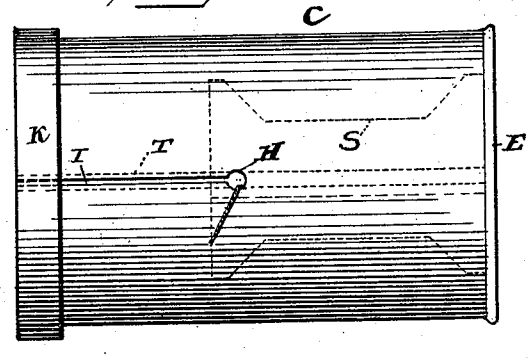

Witnesses
Isaac Behrend.

Inventor
Indianna V. Cooper.

By his Attorneys,
N. L. Pollauer.
C. A. Snow & Co.

THE NORRIS PETERS CO., PHOTO-LITHO., WASHINGTON, D. C.

UNITED STATES PATENT OFFICE.

INDIANNA V. COOPER, OF WILMINGTON, DELAWARE.

SPOOL-HOLDER.

SPECIFICATION forming part of Letters Patent No. 456,083, dated July 14, 1891.

Application filed February 25, 1891. Serial No. 382,820. (No model.)

To all whom it may concern:

Be it known that I, INDIANNA V. COOPER, a citizen of the United States, residing at Wilmington, in the county of New Castle and State of Delaware, have invented a new and useful Spool-Holder, of which the following is a specification.

This invention relates to spool-holders adapted to be attached to the garment of a person; and the object of the same is to effect certain improvements in devices of this character.

To this end the invention consists in the specific details of construction hereinafter more fully described and claimed, and as illustrated on the accompanying sheet of drawings, wherein—

Figure 1 is a general perspective view of this device in use with the cap removed. Fig. 2 is a central horizontal section. Fig. 3 is a front elevation showing the spool in dotted lines. Fig. 4 is an elevation of the open end. Fig. 5 is a detail view of the cap.

Referring to the said drawings, the letter C designates a cylinder having one end E closed, and the letter P designates a safety-pin whose body is soldered or otherwise secured to the rear of said cylinder and whose pin-point is free. Within the cylinder is a tubular shaft T, soldered at one end to the center of the closed end E and its other end being open and standing about flush with the open end of the cylinder. The latter is provided in its front side with an incision or cut I, extending from its open end to about the center of its length and terminating in an enlargement or hole H.

K is the closing-cap, which fits tightly over and closes the open end of the cylinder. From the center of this cap projects a spindle Q, which passes into the tubular shaft T, as shown in Fig. 2, when the cap is put on. The whole may be made of tin or other material properly finished and ornamented.

In use a spool S is placed upon the tubular shaft T and the thread therefrom passed through the cut I into the hole H and the cap K put on. The thread can then be drawn from the spool without the possibility of the latter slipping out of the cylinder. The cylinder is attached to the user's dress by the safety-pin, as seen in Fig. 1, and the thread is withdrawn from time to time, as needed. A new spool may be inserted at any time by first taking out the old one.

What is claimed as new is—

The herein-described spool-holder, the same comprising a cylinder having one closed end and provided with a hole in one side and a cut extending therefrom to the open end of the cylinder, a tubular shaft secured to said closed end and standing within and at the center of said cylinder, with its outer open end about flush with the open end thereof, a closing-cap fitting over the open end of the cylinder and having a spindle extending into said shaft, and a supplemental pin mounted on the cylinder opposite the cut, as and for the purpose hereinbefore set forth.

In testimony that I claim the foregoing as my own I have hereto affixed my signature in presence of witnesses.

INDIANNA V. COOPER.

Witnesses:
GEO. W. BRIGHT,
O. PERCY BRIGHT,
GEORGE W. ROBERTS.