B. F. TRACY.

DRIP PAN.

APPLICATION FILED OCT. 2, 1907.

918,396. Patented Apr. 13, 1909.

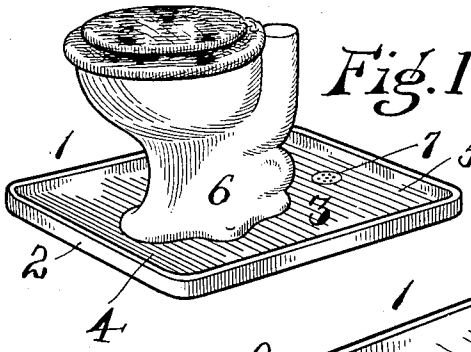

Fig. 1

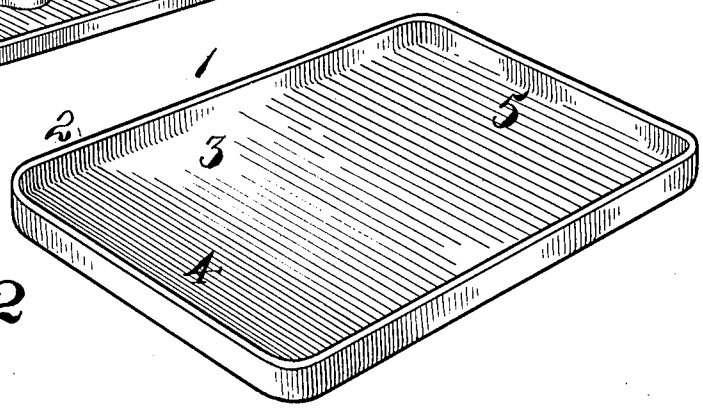

Fig. 2

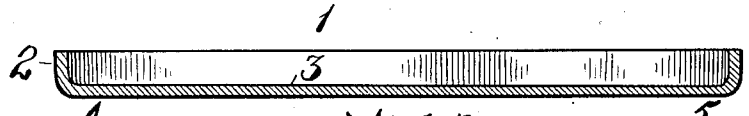

Fig. 3

Witnesses:
Elma R. Linn.
Glenara Fox

INVENTOR—
Benjamin F. Tracy,
By C. E. Humphrey.
ATTORNEY.

UNITED STATES PATENT OFFICE.

BENJAMIN F. TRACY, OF BARBERTON, OHIO.

DRIP-PAN.

No. 918,396. Specification of Letters Patent. Patented April 13, 1909.

Application filed October 2, 1907. Serial No. 395,591.

To all whom it may concern:

Be it known that I, BENJAMIN F. TRACY, a citizen of the United States, residing at Barberton, in the county of Summit and State of Ohio, have invented new and useful Improvements in Drip-Pans, of which the following is a specification.

This invention relates to improvements in drip-pans for water-closet-bowls, wash-stands and similar devices, and the object thereof is to provide a perfectly water-proof drip-pan adapted to rest upon the floor around the water-closet-bowl, wash-stand, etc. to catch any possible overflow, drip or water accumulating by reason of condensation on the exterior thereof to prevent the same from escaping onto the floor or carpet of the apartment in which the same is located.

A further object is to make the same of a flexible, elastic material provided with slightly raised edges and in an imperforate condition, to the end that the openings necessary to the passage of the pipes or instrumentalities used in connection therewith may be made by the plumber or operator who places the same in position, experience having demonstrated that the size of the openings necessarily cut in the drip-pan vary greatly, depending upon the kind of device with which the same is used, as well as the position which it occupies in a room.

A still further object is to make the floor or bottom of the drip-pan inclined so that all drainage or overflow collecting therein will be carried to one portion thereof from whence it escapes by a suitably-placed drain adapted to be connected therewith for the sole purpose of draining any accumulation in said pan.

Other advantages constituting objects of this invention will more fully appear in the subjoined description.

A practical embodiment of this invention is illustrated in the accompanying drawings, in which similar reference numerals indicate like parts in the different figures.

In the drawings, Figure 1 is a perspective view of my improved drip-pan with a water-closet-bowl properly positioned thereon, also showing the drain by which the overflow or drip therefrom may be carried away; Fig. 2 is a perspective view of my invention enlarged showing the pan as it is supplied by the manufacturer before any openings are cut therein; and, Fig. 3 a longitudinal section of Fig. 2.

Experience has demonstrated that conveniences such as water-closet-bowls, drains, wash-stands, etc. frequently become clogged and overflow, and also during warm weather they accumulate, by reason of the condensation of the moisture in the atmosphere a large amount of moisture on the exterior, which, as it accumulates, runs down and discolors and ruins the surface on which the same is mounted, and in order to obviate this condition, the structure, hereinafter specifically described is employed to catch this overflow and drip and carry the same by a suitably-positioned drain to the soil pipe or sewer, which carries away the natural discharge from the device with which the same is used.

Specifically describing this drip-pan, the reference numeral 1 designates my improved drip-pan, preferably composed of vulcanized rubber, thereby rendering the same fluid tight and flexible to any degree which the same may require. This pan is provided with an upturned lateral edge 2 of sufficient height to contain any overflow or drip which may accumulate in said pan. The amount of stiffness or rigidity of the pan 1 is immaterial to this invention and it may be made of any quality of material suitable for the purpose, although reasonably stiff vulcanized rubber has been found to be best. In forming this pan 1 I so construct it that the bottom, designated in the drawings by the reference numeral 3, is thicker at the end 4 than at the end 5, thereby making the bottom portion 4 slightly inclined to the end 5 so that any liquid which accumulates in the pan will naturally flow toward the lower or thinner end 5. In positioning this pan, the workman will ascertain accurately where the same should be placed and he then cuts an opening of a suitable size to inclose the drain pipe which is to lead from such a device as a water-closet-bowl, designated in the drawings by the reference numeral 6. The bowl 6 is then fixedly secured in position by the ordinary means which clamps the edges of the pan around the drain pipe securely between its under face and the flange which is always placed on the upper end of a drain pipe, thereby making a tight joint between the pan and the outlet of the bowl.

If desired, although not absolutely neces-

sary, a separate drain connection, designated in the drawings by the reference numeral 7 may be supplied to carry off to the main sewer the accumulation in the pan 1, but this accumulation may be wiped up by any absorbent material when necessary.

A great advantage derived from a soft flexible drip-pan such as shown in the drawings, is that in cleaning or wiping the same the edges thereof will bend down under the force employed, thus permitting the entire upper surface thereof to be properly cleaned, and at the same time the edges thereof around the bowl for instance may be raised and any dirt or dust accumulating thereunder may be wiped away. The comparative cheapness of such a device of waterproof material commends it to the purchasing public as well as its great usefulness in collecting any overflow and drip from a closet-bowl, wash-stand or like device, because it serves to keep the floor or surface on which the device is mounted free from moisture, thereby preserving the life of the same and rendering the replacement of the floor at intervals unnecessary.

What I claim and desire to secure by Letters Patent, is:—

As a new article of manufacture, a drip-pan to catch the overflow from water-closet bowls, drains, wash-stands and similar devices formed of homogeneous vulcanized rubber comprising a bottom provided with an upwardly-extending yieldable marginal flange completely surrounding said bottom and integral therewith, one portion of said bottom thicker than another portion with the upper surface thereof inclined from the thicker to the thinner portion, whereby any accumulation of liquid therein will normally flow to the thinner side or depressed portion of said surface, said latter portion capable of being provided with an opening to receive a drain for permitting the escape of accumulated liquid.

In testimony whereof I have hereunto set my hand in presence of two subscribing witnesses.

BENJAMIN F. TRACY.

Witnesses:
C. C. SCHUTZ,
C. E. HUMPHREY.