Sept. 3, 1940. F. C. STEVEY 2,213,352

HYDRAULIC CONTROL MEANS FOR AUTOMATICALLY STABILIZING ELECTRIC CURRENT LOAD

Filed July 25, 1938 4 Sheets-Sheet 1

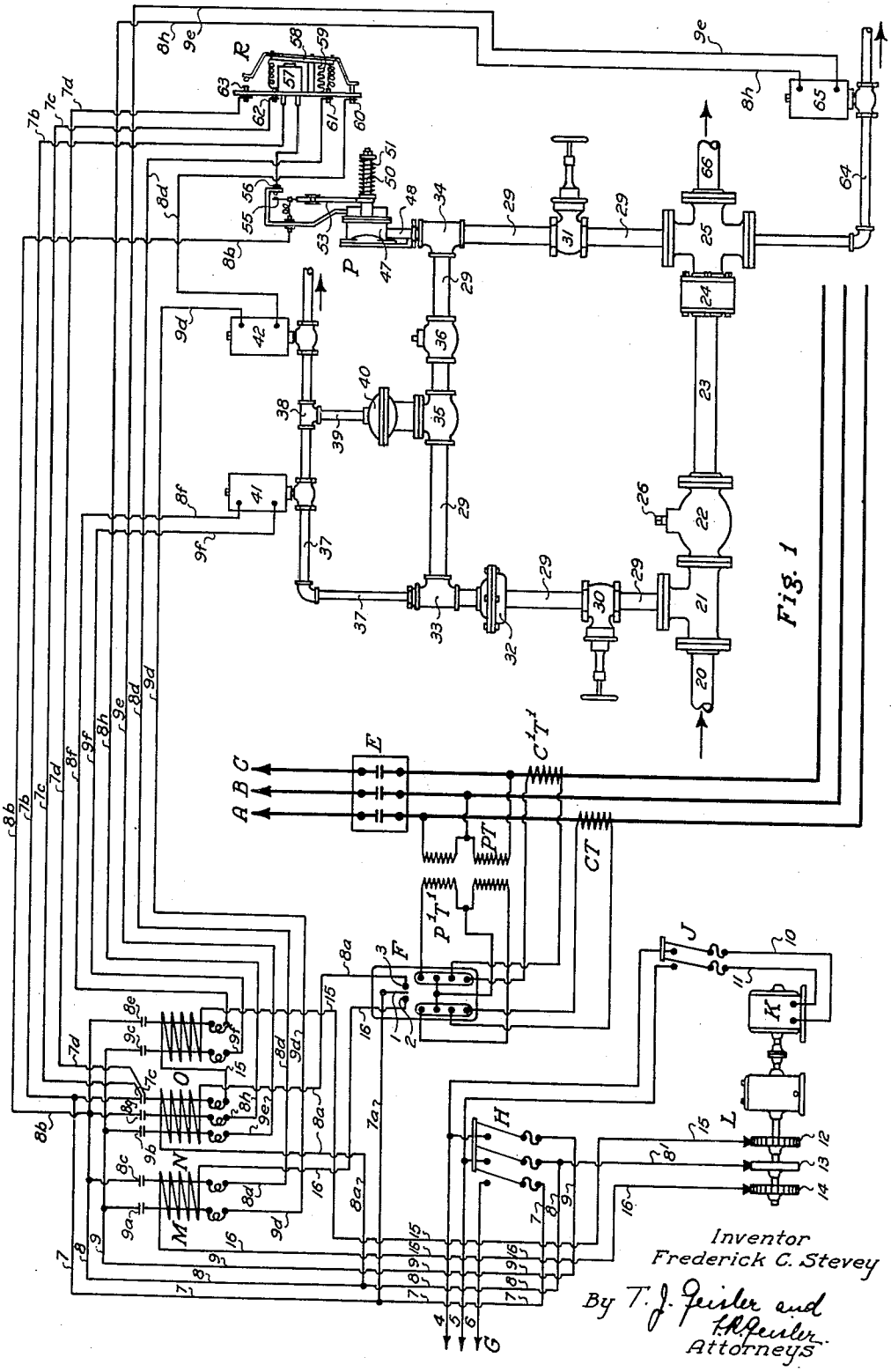

Inventor
Frederick C. Stevey
By T. J. Feisler and T. H. Feisler
Attorneys

Sept. 3, 1940. F. C. STEVEY 2,213,352

HYDRAULIC CONTROL MEANS FOR AUTOMATICALLY STABILIZING ELECTRIC CURRENT LOAD

Filed July 25, 1938 4 Sheets-Sheet 2

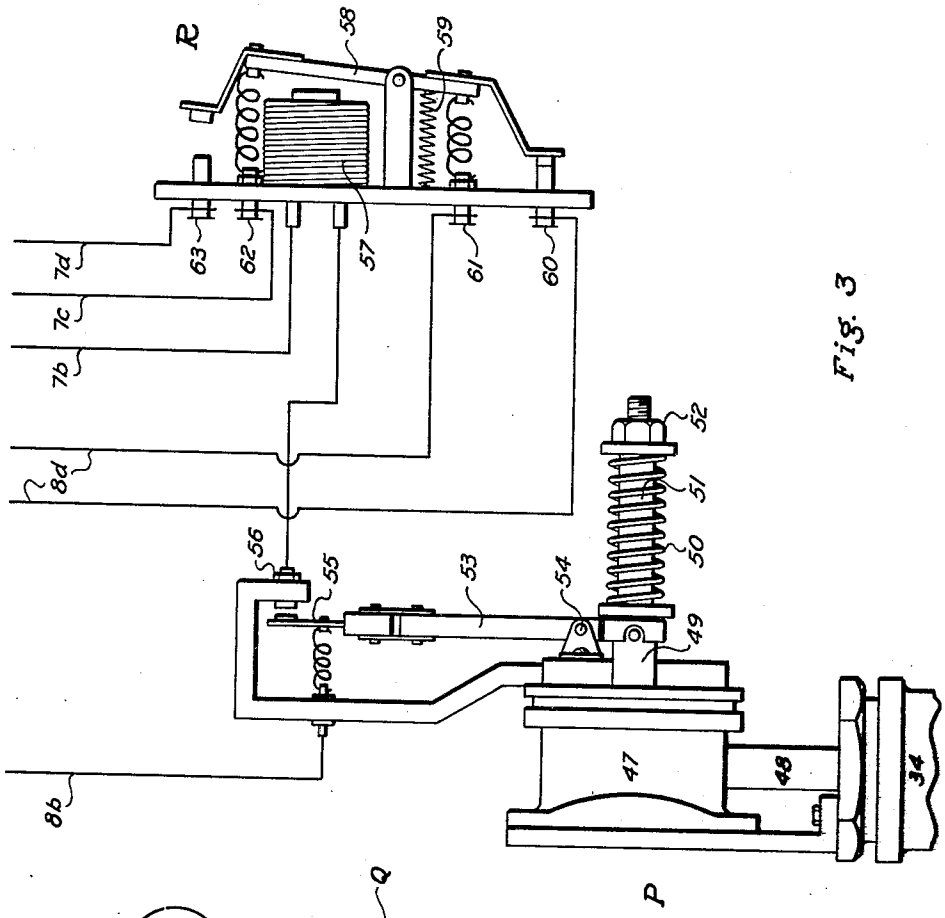

Fig. 3

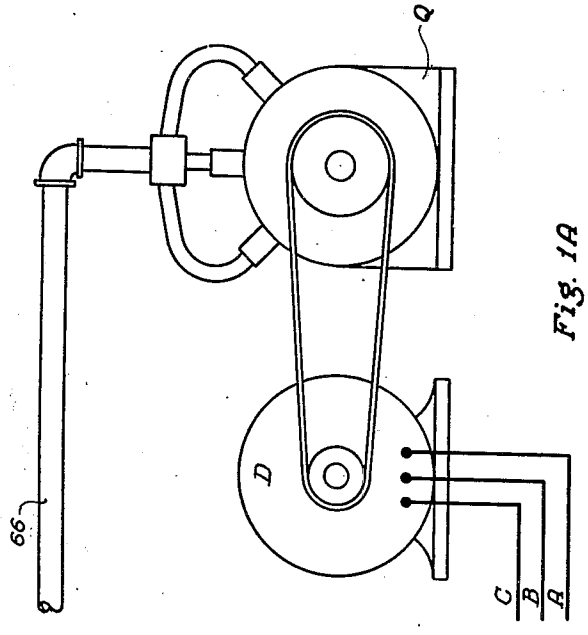

Fig. 1A

Inventor
Frederick C. Stevey
By T. J. Geisler and
F. R. Geisler
Attorneys

Sept. 3, 1940. F. C. STEVEY 2,213,352

HYDRAULIC CONTROL MEANS FOR AUTOMATICALLY STABILIZING ELECTRIC CURRENT LOAD

Filed July 25, 1938 4 Sheets-Sheet 3

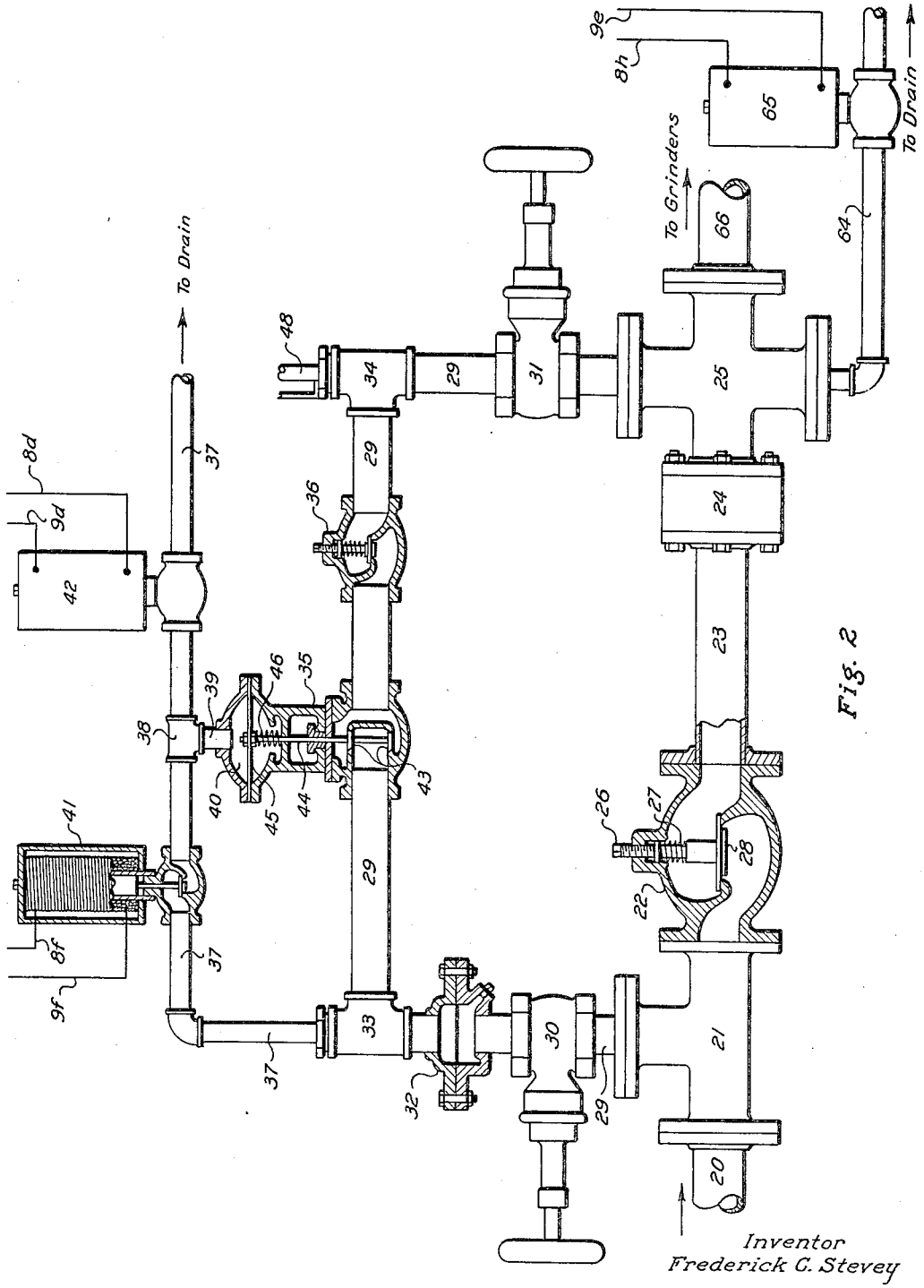

Fig. 2

Inventor
Frederick C. Stevey

By T. J. Geisler and T. R. Geisler
Attorneys

Sept. 3, 1940. F. C. STEVEY 2,213,352

HYDRAULIC CONTROL MEANS FOR AUTOMATICALLY STABILIZING ELECTRIC CURRENT LOAD

Filed July 25, 1938 4 Sheets-Sheet 4

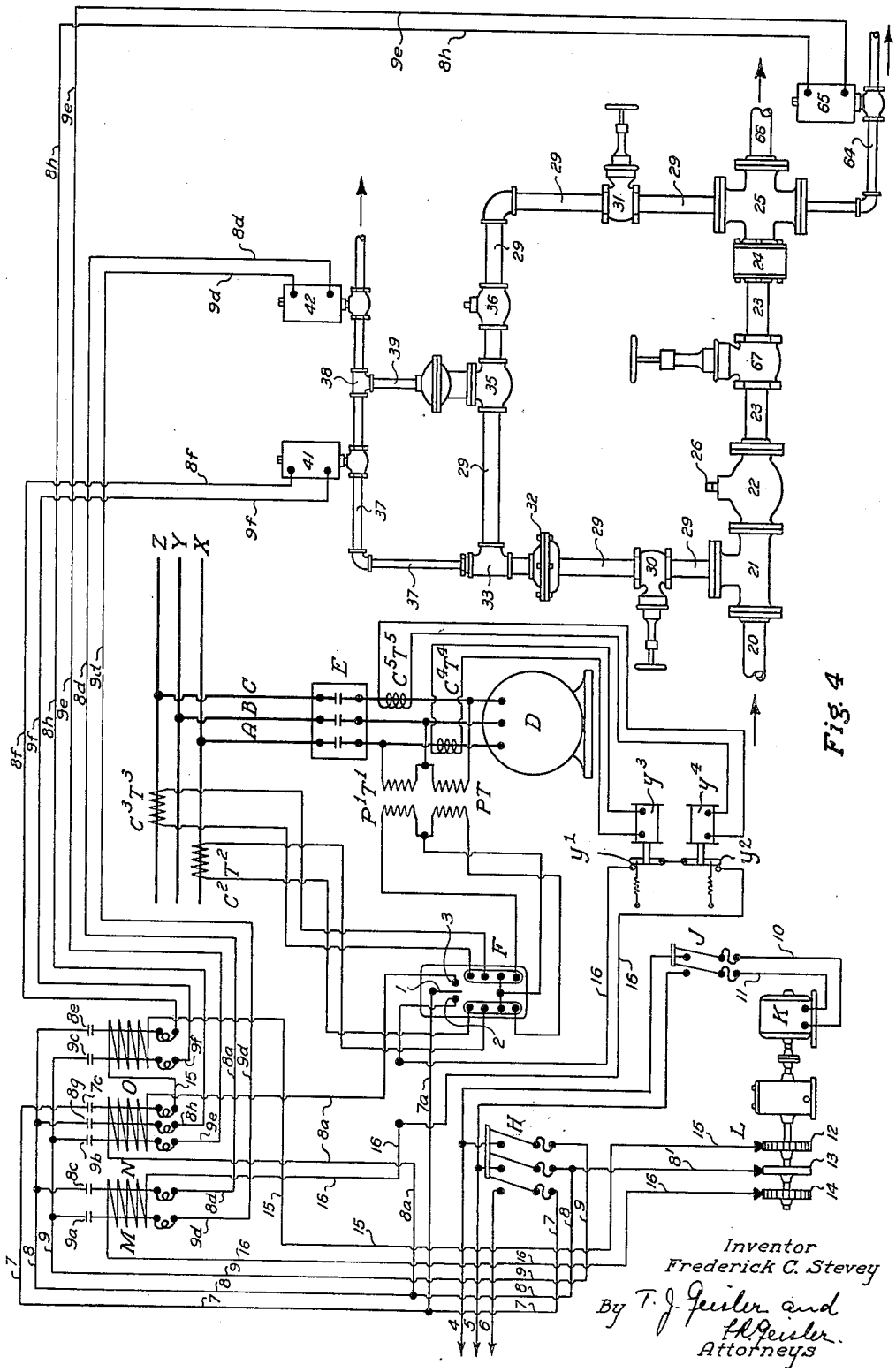

Fig. 4

Patented Sept. 3, 1940

2,213,352

UNITED STATES PATENT OFFICE

2,213,352

HYDRAULIC CONTROL MEANS FOR AUTOMATICALLY STABILIZING ELECTRIC CURRENT LOAD

Frederick C. Stevey, Camas, Wash.

Application July 25, 1938, Serial No. 221,268

8 Claims. (Cl. 83—75)

My invention relates to means for regulating an electric power load, and, more particularly, the load on an electric motor used for driving wood pulp grinders in the production of mechanical pulp in paper manufacture. The primary object of my invention is the maintenance of the motor load at an approximately constant level, thus permitting the operation of the motor at predetermined or maximum capacity without danger of overloading.

It is customary in pulp grinders to have the blocks of wood which are being ground held against the grinding surfaces of the rotating grinders by water pressure. The amount of power required to operate the grinders, that is the load on the driving motors, is thus directly influenced by variation in this water pressure.

A more specific object of my invention, accordingly is to control the water pressure exerted in the cylinders of wood pulp grinders in such way that the load on the driving motor will be constant.

In the grinding of wood pulp, assuming that the water pressure which serves to hold the blocks of wood against the grinding surface remains constant, several causes will operate to bring about considerable fluctuation in the power load on the grinder motor. Among these causes are variations in the wood itself, for instance whether it is soft or hard wood, and in the size and shape of the blocks of wood. Also, there is occasional binding or wedging of individual blocks of wood in their respective pockets. But the chief cause is the variation in the number of blocks of wood being ground at any one time, due to the necessity of refilling the pockets and replacing the blocks of wood as they are used up. Thus, when one or more pockets of the grinder become empty, the load is reduced, and the load is increased again when these pockets are refilled. But, while there is this resulting load fluctuation when the water pressure remains constant, on the other hand, it would be possible, by varying the water pressure, to overcome the load fluctuations. This I accomplish by controlling the water pressure in the cylinders of the grinder automatically, according to the load on the grinder motor, so that any decrease or increase of the motor load will be immediately overcome by an increase or reduction, respectively, in the pressure exerted in the grinder cylinders.

However, too much variation of the pressure with which the wood blocks are held against the grinding surfaces would produce unfavorable results in the pulp obtained; that is to say, too great a pressure would produce too coarse fibers and might even injure the grinding surfaces of the stones, while too light a pressure would not produce efficient results. A further object of my invention, therefore, is to keep the variable and automatically controlled pressures holding the wood blocks against the grinding surfaces within certain predetermined limits.

In carrying out this particular object I provide for a minimum pressure at a predetermined level and obtain the desired variations in pressure by controlling automatically the excess pressure to be applied, while setting a definite predetermined limit for the maximum amount of excess pressure applied, thus keeping the total pressure within desired limits.

A further important object of my invention is to provide a means for regulating automatically the load on a block of purchased power, where part or all of such purchased power is available for pulp grinder motors, whereby full use will be made of the purchased power constantly but any excess use of power beyond that contracted for will be avoided, thus holding the block of purchased power at the maximum level.

The manner in which I attain these and incidental objects is fully set forth in the following description of my device and the manner of its operation, in which reference is made to the accompanying drawings.

In the drawings:

Fig. 1 and Fig. 1A taken together show a diagrammatic set-up of the various elements of my invention, illustrating one general method of operation of my invention;

Fig. 2 is a more or less schematic drawing, on a larger scale, of that portion of Fig. 1 which comprises the valves and associated elements connected to the pipe line furnishing hydraulic pressure to the cylinders of the pulp grinders;

Fig. 3 is a similar drawing of the pressure switch of Fig. 1, this pressure switch also being connected to the hydraulic pressure control mechanism; and

Fig. 4 is a diagrammatic view similar to Fig. 1 but more schematic, and illustrates a slight modification in the set-up and use of my invention, where the object is to maintain a uniform maximum consumption of purchased power rather than a uniform load on the motor.

Referring first to Figs. 1 and 1A, A, B and C indicate the conductors of a three-phase power system over which purchased power, obtained from any suitable source, is carried to the motor D, this motor being assumed to operate the

usual type of wood pulp grinder (Fig. 1A) in a paper manufacturing plant. A switch E, of any suitable type, such as an oil switch, is provided for the purpose of shutting off all power to the motor D, when the grinders are not operating.

A sensitive contact-making watt relay, which is indicated by F, is so arranged that the swinging pointer 1 will be balanced in a neutral position between the two contact points 2 and 3, when the desired predetermined load is imposed on motor D, but will swing to one side or the other when such load rises above or falls below such predetermined level. This contact-making watt relay F, which may be of any form similar to the so-called Kelvin Balance, I have found it practical to arrange substantially as shown in Fig. 1, and this relay is connected to the current transformers CT and C'T', the primaries of which transformers are the conductors A and C, respectively, and to the potential transformers PT and P'T', the primaries of which are connected across the conductors B, C and A, B, respectively.

The current for operating the contactor switches and other parts of my device, to be described later, is obtained from any suitable source G, as indicated in Fig. 1, and which preferably supplies 220 volts alternating current over the conductors 4, 5 and 6. The conductors 7, 8 and 9 are connected to these conductors 4, 5 and 6 by a switch H and the conductors 10 and 11 are also connected to conductors 4 and 5 by the switch J and supply power to a motor K which operates a rotary adjustable timing or interrupter switch L. This interrupter switch L is similar to that described by my United States Letters Patent, No. 2,041,306, issued under date of May 19, 1936, entitled "Automatic coordinator for main and auxiliary sources of electricity," and comprises three disks 12, 13 and 14 driven in unison, the center disk 13 having a continuous metal outer rim, and the rims of each of the disks 12 and 14 provided with insulated spaced contact segments, any number of which may be connected together and one of which is connected to the rim of the center disk. Suitable brushes contact the rims of these three disks, the brush for the center disk 13 being connected by conductor 8' to conductor 8, and the brushes for disks 12 and 14 being connected to conductors 15 and 16, respectively. Thus conductor 8' is intermittently connected to conductors 15 and 16, the frequency and length of such periods of connection depending upon the speed with which the interrupter switch L is operated and the effective lengths of the contact segments on the rims of each of the disks 12 and 14, as explained in my previous patent above referred to.

Conductor 16 is connected to a contactor switch M, and when the pointer 1, connected thru 7a to the conductor 7, closes the contact at point 2, the contactor switch M will be energized intermittently thru the rotary switch L. Energizing the contactor switch M closes the pairs of contacts 8c and 9a whereby the conductors 8d and 9d are respectively connected to conductors 8 and 9.

A similar contactor switch N is connected to the conductor 8 by 8a, and this switch is energized when the pointer 1 closes the contact at point 3. Energizing the switch N closes the pairs of contacts 9b, 8g and 7c, whereby conductors 9e and 8h are respectively connected to conductors 9 and 8 and whereby conductor 15 is connected to conductor 7. Conductor 15 in turn is connected to the contactor switch O, which switch will be energized intermittently thru rotary switch L when the pointer 1 closes the contact at point 3. Energizing the contactor switch O closes the contacts 8e and 9c, whereby conductors 8f and 9f are respectively connected to conductors 8 and 9.

Referring now more particularly to Fig. 2, a pipe line 20 conveys water from any suitable source (not shown), such as an elevated reservoir or tank, to the hydraulic control portion of my device. The water is delivered thru pipe 20 under a constant head or pressure as is common with pulp grinders of the type in question. Let it be assumed that the constant water pressure in pipe 20 is approximately 130 lbs. The pipe 20 is connected to a T-fitting 21, to one end of which is connected in sequence a pressure reducing valve 22, a supplementary pipe section 23, of the same diameter as the pipe 20, a check valve 24 and a cross-fitting 25.

The pressure reducing valve 22 is of standard type having a screw 26 for adjusting the force exerted by the compression spring 27 tending to hold the disk 28 seated on the valve seat. Increasing the tension of spring 27 operates to increase the difference in pressure between the two sides of this valve, that is to say the difference in pressure between the water in pipe 20 and the water in the supplementary pipe section 23. Check valve 24 will permit water to flow from the supplementary pipe 23 to the cross-fitting 25, but will not permit the flow in the reverse direction.

The primary branch pipe-line 29 is connected to the T- fitting 21 and to the cross-fitting 25, and comprises sections of pipe of smaller diameter than pipe 20 and includes the gate valves 30 and 31, by which this branch line may be entirely shut off for repairs, etc., a screen 32 for trapping gravel and other foreign substances in the water, T-fittings 33 and 34, a balanced diaphragm valve 35, to be described later, and a pressure reducing valve 36 similar to the pressure reducing valve 22.

A second branch pipe 37, of still smaller diameter than the pipe line 29, is connected to the T-fitting 33. The other end of this pipe line 37 is open and discharges to any suitable drain. The pipe line 37, by means of T-fitting 38, and the connecting nipple 39, is joined to the diaphragm chamber 40 of the balanced valve 35. A solenoid operated valve 41 is interposed in the pipe line 37 between the T-fitting 38 and T-fitting 33, as indicated in Figs. 1 and 2, and a similar solenoid operated valve 42 is placed between T-fitting 38 and the open discharge end of pipe line 37.

The balanced double disk valve 35 comprises a pair of disks 43 secured to a valve stem 44, the upper end of which is attached to a diaphragm 45 constituting the bottom of the diaphragm chamber 40. A coil spring 46, arranged as shown in Fig. 2, operates normally to raise the valve stem 44 and the attached disks, thereby opening the valve. However, when water under pressure enters the diaphragm chamber 40, the pressure on the diaphragm 45 forces the valve stem 44 down and closes the valve. From the description thus far, it will be apparent that, assuming the gate valve 30 to be open, whereby water under pressure enters the pipe line 29 and the branch line 37, when solenoid valve 41 is open and solenoid valve 42 is closed, water will enter the valve chamber 40 and close the balanced valve 35; but when solenoid valve 41 is closed and solenoid valve 42 is open, the water under pressure in dia-

phragm chamber 40 is permitted to escape, relieving the pressure on diaphragm 45 and permitting the spring 46 to act to open the balanced valve 35.

While I have shown the double disk valve 35 and coil spring 46 so arranged that the spring 46 normally acts to cause valve 35 to open, it would be possible, merely by inverting the double disks of valve 35, and changing the valve seats accordingly, to have the spring 46 act to close valve 35. With such arrangement when the valve 35 was to be opened the solenoid valve 41 would have to be opened and solenoid valve 42 closed; and similarly, when valve 35 was to be closed, solenoid valve 41 would have to be closed and solenoid valve 42 opened, thus permitting the spring 46 to close the double disk valve 35. While either arrangement might be provided in my invention, I prefer to arrange the parts in the manner shown in the drawings and as previously described, that is, with the coil spring 46 acting normally to open the double disk valve 35.

Fig. 3 shows the pressure actuated switch P which I arrange to operate a reversing relay switch R automatically whenever the water pressure in the cross-fitting 25 (shown in Figs. 1 and 2) drops below a predetermined minimum. The pressure actuated switch P includes a chamber 47, connected by a branch pipe 48 to the T-fitting 34, with a diaphragm in said chamber 47 adapted to operate a sliding sleeve 49 which slides on a fixed bar 50. A spring 51 on said bar 50, interposed between the outer end of sleeve 49 and an adjusting nut 52, acts to move the sleeve and attached diaphragm inward in chamber 47 whenever the pressure therein falls below a predetermined minimum, for example 60 pounds, to which the spring 51 may be set by adjusting nut 52. A lever arm 53, pivoted at the fixed point 54, has its lower end connected to sleeve 49 so that inward movement of the sleeve 49 causes the upper end of lever 53 to swing in the reverse direction. A contacting element 55 is carried by the upper end of lever 53 and is electrically connected to conductor 8*b*, as indicated in Fig. 3. A stationary contact point 56 is connected to one terminal of the coil 57 of the power transfer relay switch R, the conductor 7*b* being connected to the other terminal. Thus when the contacting element 55 at the end of lever 53 closes the contact at the point 56, the coil 57 is energized. A pivoted contact making element 58, normally held in the position shown in Fig. 3, by a spring 59, acts when in this position to close the circuit between the points 60 and 61, but, when the coil 57 is energized, acts to break the circuit between 60 and 61 while closing the circuit between contact points 62 and 63.

Returning now to Fig. 2, a drain pipe 64 is connected to the bottom of the cross-fitting 25, and the outlet thru this drain pipe is controlled by a solenoid operated valve 65, similar to the valves 41 and 42. The solenoid of this valve 65 is connected to conductors 8*h* and 9*e*. The purpose of this valve 65 and of the drain pipe 64 is to reduce the water pressure in the cross-fitting 25 quickly, should this pressure become too great. The pipe 66, connected to the cross-fitting 25, supplies the water under the desired varying pressure to the cylinders of the grinders.

The operation of my device will now be described. Let it be assumed that it is desired to have the pressure in the grinder cylinders kept between 60 and 100 lbs., that is to say, it is assumed that a lower pressure than 60 lbs. in any of the cylinders will not permit satisfactory grinding of the corresponding block of wood, and that higher pressure than 100 lbs. will produce fibers that are too coarse or which are otherwise unsatisfactory, or will cause injury to the grinding stones; but that any pressure between 60 and 100 lbs. will produce satisfactory results, and that it is desired to vary this pressure within these limits in order to keep a constant load on the motor and make a maximum and most efficient use of the block of purchased power. Let it be assumed also that water is obtained from a suitable source under 130 lbs. pressure.

The pressure reducing valve 22 is set so that the pressure within the pipe section 23 will be 60 lbs. when the pressure in pipe 20 and T-fitting 21 is 130 lbs. If the rest of my device were entirely disconnected, that is if the gate valves 30 and 31 were closed, a fairly constant pressure of 60 lbs. would thus be maintained in the cross-fitting 25 and pipe 66. The remainder of my device is designed, therefore, to control the amount of excess pressure, within the predetermined limits, necessary to maintain the desired constant maximum load on the motor.

The pressure reducing valve 36 is set so as to reduce the pressure on the low side to 100 lbs. when the pressure on the high side is 130 lbs. Thus, with water free to pass into the cross-fitting 25 and pipe 66 thru pipe section 23 and the branch pipe line 29, a maximum pressure of 100 lbs. is furnished in pipe 66, if the balanced valve 35 is open sufficiently, and a minimum pressure of 60 lbs. is furnished if valve 35 is closed.

When the motor D is carrying the desired load, the pointer 1 of the contact-making watt relay F will be in the neutral position shown in Fig. 1. Let it now be assumed that the load on motor D drops below the desired level due to the emptying of the pocket on one of the grinders, or for some other reason. This reduced load over the conductors A, B, C will cause the pointer 1 to swing to the point 2, which will energize the contactor switch M, causing the latter to close the contacts 8*c* and 8*a*, whereby current will pass thru the conductors 8*d* and 9*d*. Since, when the reversing relay switch R is in its normal position, there is no break in the line 8*d*, the points 60 and 61 being connected, the current passing over conductors 8*d* and 9*d* causes the solenoid valve 42 to open and release some of the water in the diaphragm chamber 40 of balanced valve 35. Release of pressure in diaphragm chamber 40 permits coil spring 46 to open the double disk valve 35 and more water will flow thru the pipe line 23 into the cross-fitting 25 raising the pressure in pipe 66.

The contactor switch M, however, will be energized only intermittently, due to the action of interrupter switch L to which conductor 16 is connected. Consequently, solenoid valve 42 will operate intermittently, permitting the balanced valve 35 to open only gradually with an inching action by diaphragm 45 and coil spring 46 until the proper opening is obtained of valve 35 which will produce just sufficient increased pressure in cross-fitting 25 and pipe 66 and in the grinder cylinders to bring the load on motor D to the desired level. Without the adjusted timing of the interrupter switch L the solenoid valve 42 would permit the balanced valve 35 to open too wide at the outset, which might cause a sudden surge of pressure in the grinder cylinders and the temporary overloading of motor D before the means for reducing pressure, which I provide, could act to check this increase in pressure.

Now let it be assumed that the load on motor D is suddenly increased too much, for example by the refilling of an empty pocket on the grinder. The pointer 1 of contact-making relay F will swing to point 3 which will cause contactor switch N to be energized, closing the contacts 9b, 8g and 7c. The closing of the contacts 9b and 8g causes current to pass thru the conductors 9e and 8h and operates the solenoid valve 65 which opens the outlet thru drain or bleeder pipe 64. This immediately reduces the pressure in cross-fitting 25 and in the pipe 66, and the grinder cylinders. At the same time the closing of the contact 7c by the contactor switch N closes the contact to conductor 15 which in turn causes contactor switch O to be energized. Energizing contactor switch O closes contacts 9c and 8e, causing current to pass thru conductors 9f and 8f to the solenoid operated valve 41. This latter valve opens and permits water from pipe 37 to enter the diaphragm chamber 40 of the balanced valve 35, which action in turn tends to close valve 35 and shut off the passage of water thru the pipe line 29 to the cross-fitting 25. The operation of contactor switch O, and hence of solenoid valve 41, however, will be intermittent due to the fact that conductor 15 is connected thru the interrupter switch L in the manner previously explained. The intermittent action of solenoid valve 41 will cause the balanced valve 35 to close gradually with an inching action between diaphragm 45 and coil spring 46, so that the water passing thru pipe line 29 will be reduced gradually and sufficiently just to bring the pressure in the grinder cylinders, that is the load on motor D, to the desired level. Without the interrupter switch L, the complete sudden closing of the valve 35, combined with the action of valve 65, might cause the pressure temporarily to drop too low. Thus the instant there is any excess load on motor D, the drain or bleeder pipe 64 is opened thru valve 65, which immediately relieves the pressure, and at the same time the valve 35 is gradually closed sufficiently to provide for the maintenance of the pressure at the proper reduced level.

Thus my device automatically, by varying the pressure in the grinder cylinders between predetermined levels such as 60 and 100 lbs., maintains a constant load on the motor D, prevents any load surges, and maintains consumption of power over the conductor lines A, B, C at the desired maximum level. Damage to the motor D thru overload is prevented, damage to the grinder stones thru excess pressure in the grinder cylinders is prevented, and finally, the quantity of the ground fibers is kept more uniform by maintaining the wood blocks pressed against the grind ing surfaces at pressures within the predetermined limits.

Thus far in describing my device and its operation, it has been assumed that there will always be sufficient water passing thru pipe 20 to furnish the desired pressure in the grinder cylinders in the manner determined by my device. In other words, it is assumed that there will always be a constant pressure of at least 60 pounds supplied thru pipe section 23, which is of the same diameter as pipe 20, and thus a constant minimum pressure of 60 pounds in the cross-fitting 25 and pipe line 66 as may be required. However, there may be moments under extreme conditions, especially when several grinders are driven by the same motor, and more than one grinder pocket is refilled at once, in which there will not be sufficient water to meet such requirements inasmuch as additional water under such conditions is required to cause the pistons in the corresponding grinder cylinders to move down immediately on the refilled pockets. It is thus possible that this temporary increase in the water demand might momentarily cause the pressure in the water supplied to the cross-fitting 25 to drop below the prescribed minimum of 60 pounds. Ordinarily this reduced pressure would result in the automatic opening of valve 35, as previously described. However, in such case, since this increased demand for water is only momentary, and the filling of the grinder pockets and corresponding cylinders of the grinder will immediately thereafter produce additional load on the motor D, it is not desirable to open valve 35. To prevent the opening of the valve 35 under such extreme conditions, and thus to prevent a subsequent resulting tendency towards a load surge, I provide the pressure switch P and the power transfer relay R previously described. The action of the pressure switch and power transfer relay under such conditions is as follows:

The reduction of pressure in the cross-fitting 25, T-fitting 34, branch pipe 48 and the chamber 47, when falling below the prescribed minimum, causes the spring 51 to move the sleeve inwardly and thereby swing lever arm 53 and cause the contact element 55 to close the contact at point 56. The closing of the contact between 55 and 56 causes the coil 57 to be energized and the energizing of this coil pulls the pivoted contact element 58 in opposition to spring 59. The resulting movement of the contact element 58 breaks the contact between 60 and 61 and closes the contact between 62 and 63. Breaking the contact between 60 and 61 interrupts the flow of current over the conductor 8d and this prevents any operation and opening of the solenoid valve 42. Closing the contact between 62 and 63 on the other hand closes a shunt circuit over the conductor 7c and 7d to the conductor 15, which causes the contactor switch O to be energized. The latter closes the contacts 8e and 9c, whereby current passes over the lines 8f and 9f to the solenoid operated valve 41, causing this valve to open. The opening of the valve 41 results in increased pressure in diaphragm chamber 40 causing valve 35 to close. Thus, in spite of the position of pointer 1, under such extreme conditions, the pressure switch P and power transfer relay switch R momentarily act to prevent the opening of valve 35 and in this way forestall any subsequent immediate tendency towards load surge. Under normal conditions, that is with pressure of 60 pounds or above, in chamber 47, pipe 48, T-fitting 34 and cross-fitting 25, the pressure switch P and power transfer relay R will remain in their normal position, shown in Fig. 3, as previously explained.

Referring now to Fig. 4, which illustrates a slight modification in the apparatus previously described, let it be assumed that purchased power is delivered over the lines XYZ to the manufacturing plant and that the conductors A, B and C are connected to the grinder motor D and to the lines XYZ as shown. Also let it be assumed that the purchased block of power delivered over the lines XYZ is to be used for other purposes as well as for operating the grinding motor D and that it is desired to make maximum use of this power at all times without exceeding the amount contracted for. In other words, instead of maintaining a constant load on motor

D it is now desired automatically to vary the load and thus the consumption of power of motor D depending upon the other power demands over the lines XYZ. In this adaptation of my invention, since it may be necessary at times to reduce the consumption of power by motor D to any amount, no provision is to be made for any minimum pressure on the grinders. Consequently, in this modification my pressure actuated switch P and power transfer relay R are not used and the conductor 8d is connected direct to solenoid valve 42. Also a gate valve 67 is added to pipe section 23 so that the passage of water through section 23 can be completely shut off and pressure in the grinder cylinders supplied only through the branch line 29. In all other respects the set-up and mode of operation of my device are the same as previously described. However, the current transformers C2T2 and C3T3 for the contact-making watt relay F' are now connected to the main lines X and Z, respectively, since it is the load on these lines and not the load on the lines A and C which is to be kept constant. The potential transformers may either be connected across the lines XY and YZ or across the lines AB and BC, and for convenience I prefer to keep the same potential transformers PT and P'T' since these can then be turned off when the switch E is disconnected.

Referring still to Fig. 4, let it be assumed that the power demand over XYZ is too great and consequently it is necessary to reduce the consumption of power by motor D, that is to reduce the load on motor D. My device under such circumstances operates immediately in the manner already explained to reduce the pressure in the grinder cylinders by opening valve 65 and simultaneously closing valve 35 by an inching action. Since all pressure must pass through the branch line 29, since gate valve 67 is closed, the supply of water to the grinder cylinders will be completely shut off if the other demands over lines XYZ are sufficiently heavy.

Again let it be assumed that the power demand over XYZ has fallen too low and consequently more power can be used for motor D. My device, operating in the manner previously described, now operates automatically to open valve 35 by an inching action until sufficient pressure is obtained in the grinder cylinders to increase the load on and consumption of power by motor D. However, assuming that the pressure reducing valve 36 is set, as previously explained, to reduce the water pressure on the low side to 100 pounds, it will be impossible, even though valve 35 remains open constantly, for any greater pressure than 100 pounds to be obtained. Furthermore, should all the "pockets" of the grinders be working and the amount of power available for motor D be greater than the motor D could or should use, overloading of the motor under such conditions will be prevented by the induction relay switches y' or y^2 located in the conductor 16. These relay switches y' and y^2 are held normally closed by spring means, but are pulled open when the current through the coils y^3 or y^4, connected with the transformers C4T4 and C5T5, respectively, becomes too strong.

Obviously, many modifications may be made in the devices which I have described as a means of carrying out my invention. The apparatus and the specific parts thereof as shown illustrate means which I have found satisfactory in carrying out my purposes. I do not wish to confine my invention to any particular apparatus, or to limit my invention otherwise than as set forth in the appended claims.

In the claims the term "sensitive relay," referring to F, is to be understood as designating a contact-making relay having a movable inductive element actuated by rise and fall in the amount of electric current demand thereby causing the contact pointer 1 of the movable inductive element to contact with point 2 or point 3, and actuate the electrical devices, the circuits of which are made and broken thru the medium of said contact-making relay.

The application of my invention specifically to a pulp grinder of the character stated is not a limitation of the use of my invention, but merely describes one specific use thereof.

I claim:

1. In a power system including a source of electric power, a motor connected to said power and a hydraulically-fed grinder driven by said motor, automatic means for stabilizing the load on said motor, said means including a main pipe line and a branch of said main pipe line, said main pipe line and said branch furnishing hydraulic pressure for said grinder, a pressure reducing means in said main line between said branch and said grinder, said pressure reducing means limiting the pressure supplied therethru to said grinder to a predetermined minimum amount, a valve in said branch pipe line, electrically actuated means controlling the operation of said valve, a pressure reducing means in said branch line between said valve and said grinder, limiting pressure supplied thru said branch to a predetermined maximum amount, a sensitive relay operated by the load on said motor for operating said electrically actuated means, whereby said valve will be closed when the load on said motor exceeds a predetermined amount and will be opened when said load falls below such predetermined amount, but whereby said pressure reducing means in said main line will permit minimum pressure to said grinder when said valve is closed and said pressure reducing means in said branch line will determine the maximum pressure to said grinder when said valve is opened.

2. The combination set forth in claim 1 with an interrupter switch in the circuits of said electrically actuated means to prevent hydraulic pressure surges and resulting load surges on said motor.

3. The combination set forth in claim 1 with the addition of a pressure actuated switch in the circuit of said electrically actuated means, said pressure switch acting, whenever the hydraulic pressure furnished to said grinder falls below a predetermined minimum, to prevent the operation of said valve until minimum hydraulic pressure has first been restored, whereby to reduce the possibility of load surges.

4. In a power system including a source of electric power, a motor connected to said power and a hydraulically-fed grinder driven by said motor, a main pipe line furnishing hydraulic pressure for said grinder, a pressure reducing means in said main pipe line, a supplementary by-pass pipe connected to said main pipe line around said pressure reducing means, a valve in said by-pass pipe, electrically actuated means controlling the operation of said valve, a sensitive relay operated by the load on said motor for operating said electrically actuated means, whereby said main pipe line will furnish minimum hydraulic pressure to said grinder and the

load on said motor will control the furnishing of additional hydraulic pressure by said by-pass pipe, and a pressure reducing valve in said by-pass pipe whereby to limit the maximum amount of hydraulic pressure furnished through said by-pass when said valve is open.

5. In a device of the character described, including a hydraulically-fed grinder and a motor driving said grinder, a main pipe line furnishing hydraulic pressure to said grinder, means limiting the pressure furnished through said main line to a predetermined minimum, a branch pipe furnishing additional hydraulic pressure to said grinder, a control in said branch pipe, electric means operated by the load on said motor for operating said control, whereby minimum pressure to said grinder will be supplied through said main pipe line and the amount of additional pressure supplied through said branch pipe will be determined by the load on said motor, a pressure-actuating switch in the circuit of said electric means, said switch adapted, whenever the pressure in said grinder falls below said predetermined minimum, to prevent the operation of said electric means until the pressure is restored to said minimum and thereby reduce pressure surges in said grinder.

6. In a device of the character described, including a hydraulically-fed grinder, a pipe line carrying hydraulic pressure to said grinder, and a motor driving said grinder, an automatic pressure control in said pipe line, an automatic control in said pipe line, electrically operated means operating said control, a sensitive relay operated by the load on said motor for actuating said electrically operated means, a bleeder valve connected to said pipe line between said control and said grinder, said bleeder separated from said control and operating independently of said control, electrically operated means operating said bleeder, said latter means actuated by said sensitive relay, whereby said bleeder will be instantly opened whenever the load on said motor exceeds a predetermined amount and thereby instantly reduce the pressure in said grinder pending the adjustment of pressure by said control.

7. In a device of the character described, including a hydraulically-fed grinder, a pipe line carrying hydraulic pressure to said grinder, a source of purchased electric power, and a motor connected to said power and driving said grinder, an automatic pressure control in said pipe line, electrically operated means operating said control, a sensitive relay controlled by the load on said purchased electric power for actuating said means, a bleeder valve connected to said pipe line between said control and said grinder, said bleeder separated from said control and operating independently of said control, electrically operated means operating said bleeder, said latter means actuated by said sensitive relay, whereby said bleeder will be caused to open whenever the load on said electric power exceeds a predetermined amount and thereby instantly reduce the pressure in said grinder pending the adjustment of pressure by said control.

8. In a device of the character described, including a hydraulically-fed grinder, a source of purchased electric power, and a motor connected to said power and driving said grinder, a main pipe line furnishing hydraulic pressure to said grinder, a pressure reducing valve limiting the pressure furnished through said main line to a predetermined minimum, a branch pipe furnishing additional hydraulic pressure to said grinder, a pressure reducing valve in said branch pipe limiting the maximum amount of pressure added through said branch pipe, a control in said branch pipe, electric means operated by the load on said purchased electric power for operating said control, whereby predetermined minimum pressure to said grinder will be supplied through said main pipe line and the amount of additional pressure supplied through said branch pipe will be determined by the load on said purchased electric power.

FREDERICK C. STEVEY.