Aug. 28, 1956 C. L. SINGLETON 2,761,122

VERIFYING MACHINE

Filed July 1, 1950 2 Sheets-Sheet 1

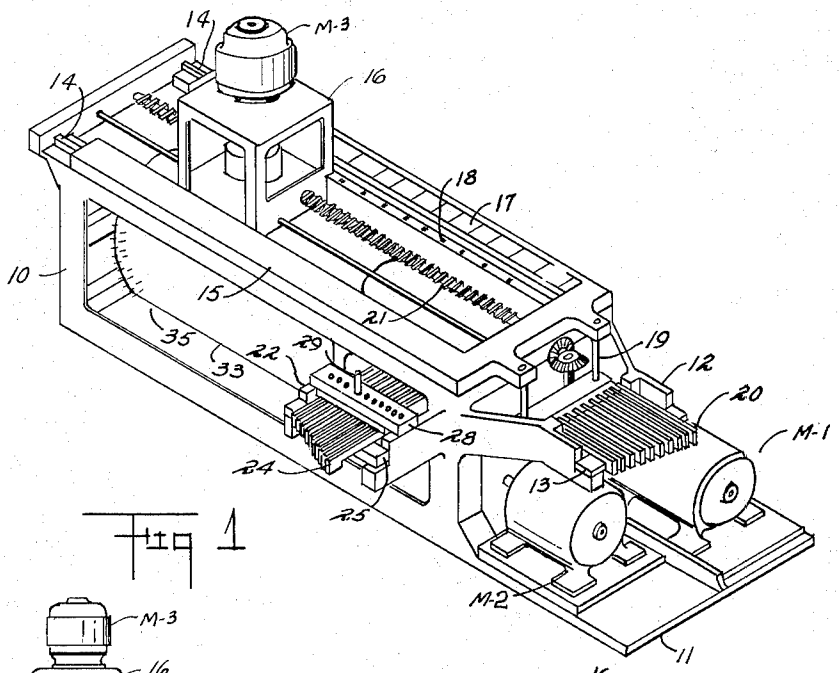

FIG 1

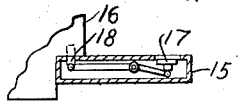

FIG 2A

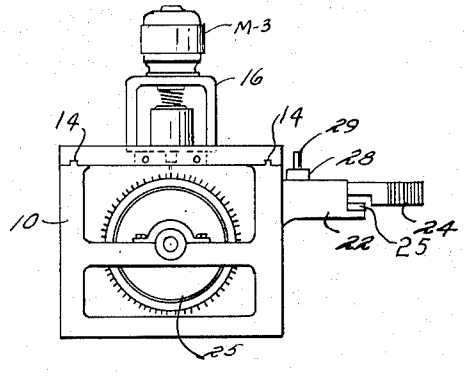

FIG 2

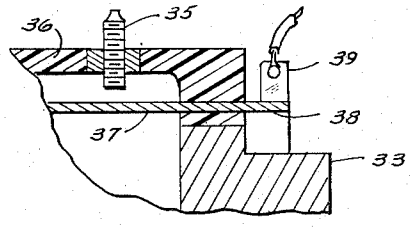

FIG 3

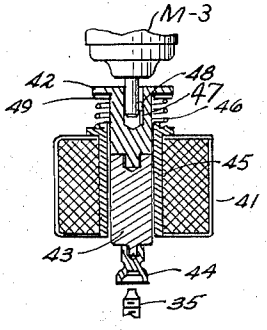

FIG 4

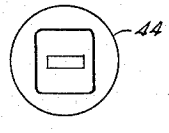

FIG 5

INVENTOR.
CLIFFORD LEE SINGLETON
BY Edw. J. Newton
Attorney

Aug. 28, 1956 C. L. SINGLETON 2,761,122

VERIFYING MACHINE

Filed July 1, 1950 2 Sheets-Sheet 2

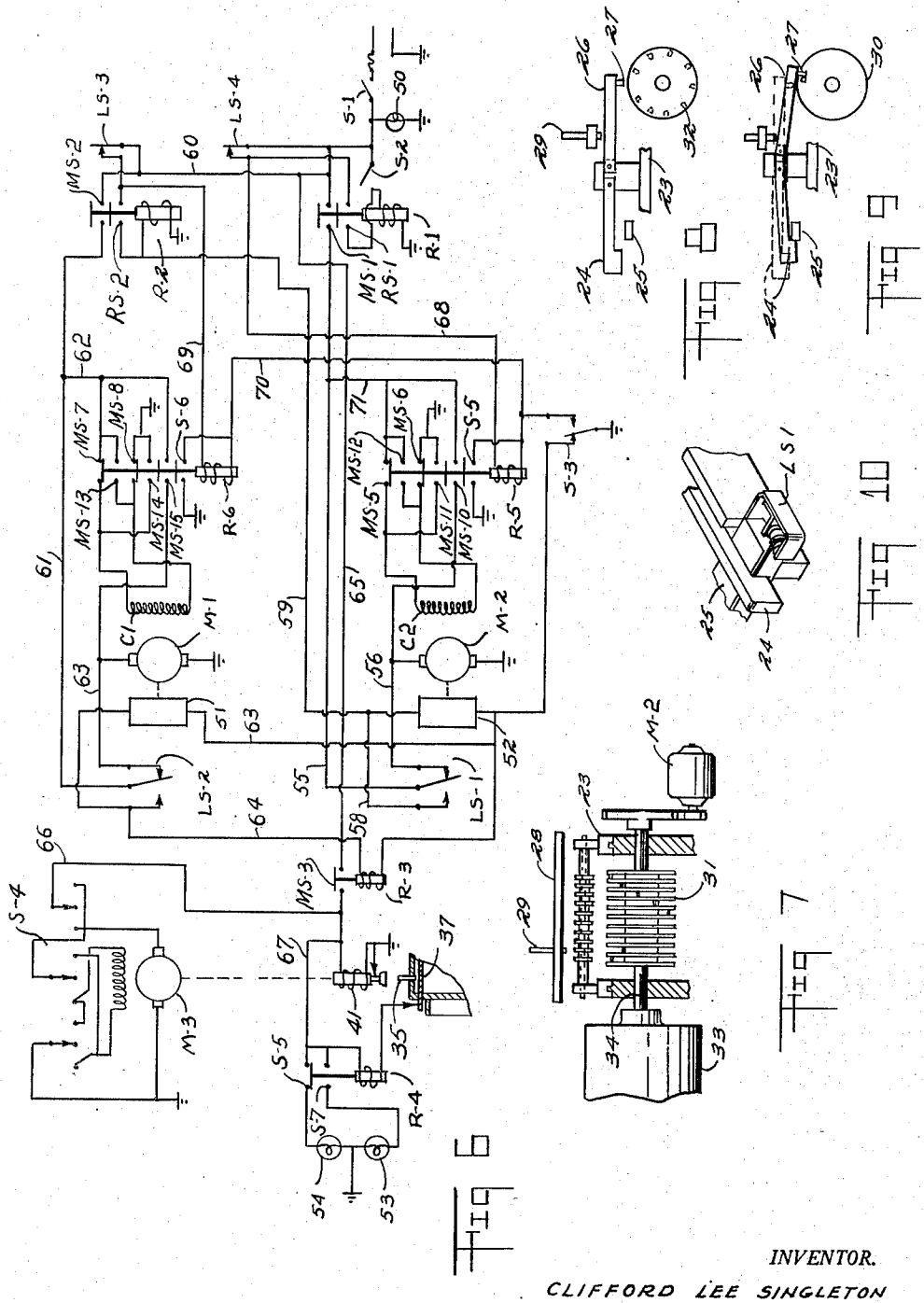

FIG 5 FIG 6 FIG 7 FIG 8 FIG 9 FIG 10

INVENTOR.
CLIFFORD LEE SINGLETON
BY Edw. J. Keaton
Attorney

United States Patent Office

2,761,122

Patented Aug. 28, 1956

2,761,122

VERIFYING MACHINE

Clifford Lee Singleton, Atlanta, Ga., assignor to General Developers Company, Atlanta, Ga., a partnership

Application July 1, 1950, Serial No. 171,656

9 Claims. (Cl. 340—152)

This invention relates to a verifying machine and more in particular to a machine which checks a combination of characters, whether letter or numbers, against a master tabulator for identification of the particular combination entered into the machine.

The invention is a modification of considerable improvement over that disclosed in my co-pending application filed April 26, 1950 and bearing the serial number 158,312. The present invention is intended to accomplish the same results as found in the co-pending application with novel mechanisms not heretofore known or used, and the present application is continuation-in-part of said co-pending application.

An object of the invention is to provide an automatic machine for the immediate verification of a particular group of characters.

Another object of the invention is the provision of a means for changing the status of the character groups for re-identification without destroying or mutilating any portion of the machine.

A further object of the invention is to provide a maximum number of identifiable character groups.

A still further object of the invention is to provide positively driven mechanism for each selecting apparatus to permit positive, pin-point character selection.

A further object of the invention is to provide an automatic visual indication of the character group entered into the machine and an automatic return to zero position after such indication has been made.

A further object of the invention is to provide a vertifying machine which is rugged in construction and extremely accurate and which may be operated from the ordinary A. C. 110 volt, 60 cycle lines common to most buildings and offices.

Further objects and advantages of the invention will become apparent in the course of the following detailed description when taken together with the accompanying drawings in which:

Fig. 1 is an isometric view of an embodiment of my invention in an improved verifying machine.

Fig. 2 is an end view thereof.

Fig. 2–A is a cross-sectional view of a detail.

Fig. 3 is a broken sectional view of a portion of the main verifying drum.

Fig. 4 is a sectional detail view through a solenoid mechanism showing how a character group is registered or changed.

Fig. 5 is a bottom view of the wrench head used on the lower end of the device illustrated in Fig. 4.

Fig. 6 is an electrical circuit diagram.

Fig. 7 is a side detail view showing the driving means for the main verifying drum.

Fig. 8 is a detail view showing the mechanism employed to stop the rotation of the main verifying drum at a selected point of rotation.

Fig. 9 is a view similar to that of Fig. 8 showing one of the stop mechanisms in operation.

Fig. 10 is a detailed view showing an automatic electrical stop switch to break the current supply when one set of the character groups has been selected.

In the drawings, numeral 10 designates a general frame of the machine which is preferably made of some light weight casting material such as aluminum or magnesium. As seen in Fig. 1 the frame carries a projecting shelf 11 on one end for supporting two of the electric motors M–1 and M–2 which drive certain of the mechanisms described later in this specification. On the same end, the frame is provided with a pair of extended arms which form a yoke 12 for supporting a stop bar 13.

The upper faces of the frame sides present two flat surfaces, each having an inserted key 14. A U-shaped frame 15 is placed upon these two flat surfaces, the side members being provided with keyways engageable with the keys of the main frame 10. This U-shaped frame is made slightly less in length than the main frame 10 and is adapted to be moved longitudinally thereon.

The inside edges of the two side members of the U-shaped frame 15 are stepped to form ways to slidably receive an indicator carriage 16 also adapted to be moved longitudinally across the machine. In Fig. 1 it will be noted that the back side member of the U-shaped frame is provided with a series of actuating buttons 17 set into the frame and provided with suitable levers as shown in Fig. 2–A to raise a stop pin 18. It can now be seen that the travel of the indicator carriage along the machine can be limited by raising one of the stop pins 18. The carriage 16 will normally be positioned at zero at the right end of the machine as viewed in Fig. 1. At this same end of the machine the U-shaped frame is provided with a depending framework 19 extending out over the edge of the main frame 10 and supporting a set of ten L-shaped selector fingers 20 any one of which, when depressed, will engage the stop bar 13 to limit the travel of the upper U-shaped frame 15 and indicator carriage 16. The frame 15 and indicator carriage 16 are moved by means of the electic motor M–2 which is geared to rotate a lead screw 21 journaled at its ends in the main frame 10 and extended through a prepared nut (not shown) at the underside of the indicator carriage 16.

Referring again to the selector fingers 20, and reading from left to right of the group as shown in Fig. 1, the first selector finger, in the present instance is placed so that, when depressed, it will be one-eighth of an inch away from the stop bar 13; that is, when the carriage is moved along the machine by the lead screw 21 and strikes one of the stop pins 18, the entire upper U-shaped frame is moved still further by one-eighth of an inch. Each succeeding selector finger of this group is positioned one-eighth of an inch further away from the stop bar with the final finger being permanently depressed to limit the final travel of the carriage 16 and frame 15. Thus, when the carriage 16 strikes any one of the stop pins 18, the frame may be moved along the main frame 10 in increments of one-eighth of an inch up to ten-eighths or a total of one and one-fourth inches. It is apparent now, that with the ten stop buttons 17 and the ten selector fingers 20, numerous combinations could be set up to position the carriage 16 at various longitudinal positions along the machine for the selection or identification of a character group.

Arranged to slide transversely into and out of the main frame 10 is a finger rack 23 more clearly illustrated in Fig. 7 of the drawing. The outer edge of the rack 23 carries a second set of selector fingers 24 arranged to stop the inward travel of the finger rack 23 in the same manner as described for the first set of selector fingers 20. These fingers 24 are also positioned away from their stop 25 bar in increments of one-eighth of an inch, to permit selected movements of the rack 23 as will be described later. It will be noted that this selective arrange-

ment includes also a forward set of selector fingers **26**. Both the forward and rear sets of selector fingers are held in a neutral horizontal plane by means of individual springs (not shown). Each finger on the forward set **26** is provided with a depending stop pin **27** as illustrated in Figs. 8 and 9.

Across the extended side members of the frame forming the yoke **22**, I have placed a positioning bar **28** having a series of ten holes across its face. The single selector pin **29** may be moved from hole to hole according to the digit of the code it represents for depressing one of the forward fingers **24**.

In Figs. 7, 8 and 9 I have illustrated a special selector drum **30** which coacts with the stop pins **27** on the forward set of selector fingers **26** to position one phase of the machine to correspond to the code number desired to be selected and verified. This selector drum **30** consists of relatively thin discs **31** spaced upon a common core, the spaces between the discs being adapted to receive the stops **27** on the forward selector fingers **26**. Between each pair of discs, that is, in the space between each disc, is a stop member **32**, so spaced arcuately between successive discs that the stops appear to wind spirally from one end of the unit to the other. In other words, the stop member on one end of the selector drum will permit only a partial rotation of the drum, and each succeeding stop will permit only another equal increment in rotation, until the final stop has permitted one complete revolution of the drum. In the present instance the arcuate movement of the drum has been set for increasing increments of one and one-eighth inches, while the rear set of fingers **24** permit a rack travel in increments of only one-eighth inch per finger.

By reference to Figs. 8 and 9 of the drawing, it can be seen that the selector pin **29** may be positioned in any one of the ten holes in the positioning bar **28** for one phase of the movement, and any one of the ten fingers **24** depressed for the second phase of the movement. With such selective variations, the rotation of the selector drum **30** may be automatically stopped at many selected points during its single revolution.

Suitably journaled in bearings positioned in the end members of the main frame **10** is a cylindrical verifying drum **33**. As seen in Fig. 7 this drum **33** is mounted on a shaft **34** common with the selector drum. Thus, by the setting of the various selector fingers as described above, the verifying drum may be made to rotate with the selector drum **30** to selected positions in its possible single revolution.

In Fig. 3 the drum **33** is shown as having projecting contact pins **35** screwed into the peripheral wall surface of the same. The circumferencial rim **36** of the drum **33** is made of some non-conducting material such as Bakelite or other plastic. This rim **36** also includes a cylindrical copper or other electrical conducting tube **37** which projects from the drum in the manner shown to form a collector ring **38**. It is now apparent that any one of the many contact pins **35** on the periphery of the drum **33** could be screwed down to engage the tubing **37** and be made to complete an electrical circuit through the collector ring **38** and the brush **39**. In the present invention each contact pin represents a particular character which, when found by the means subsequently described, will indicate a condition of that character by whether or not the contact pin **35** passes an electric current through the same. To automatically perform this function I have provided an arrangement more clearly shown in Figs. 2 and 4 of the drawing wherein the indicator carriage **16** supports a small electric motor M–3 having its shaft operatively connected to the plunger of a solenoid **41**. The plunger actually consists of three pieces, the upper piece **42** being of iron or other material normally used for this purpose, and the center piece **43** being of a material having non-magnetic qualities such as copper. These two pieces are threadedly engaged as shown; and the center piece is provided with a removable wrench head **44**. The joined pieces are extended through the solenoid core **45** and supported loosely in the same by means of a compression spring **46**. It will be noted that the upper piece **42** of the plunger is provided with an internal keyway **47** slidably engaged by a key **48** mounted on the motor shaft. This piece **42** is further provided with a slip ring **49** held between the spring **46** and the head of the plunger, and by means of which an electric current may be passed through the same to the contact pin **35**.

When it becomes necessary to position the contact pin either away from or against the tubing **37** for the breaking or making of that particular circuit, use is made of the motor M–3 which is provided with forward and reverse switches as will be seen on the electrical diagram in Fig. 6. It will be remembered that this motor M–3 is used only to change or set up a particular character group and does not function during the normal operation of the machine. It can be seen in Fig. 4 that if the solenoid is energized and the wrench head **44** is brought into engagement with the contact pin **35**, a forward and reverse movement of the motor could lower or raise the contact **35** in the rim **36** to make or break electrical contact with the current carrying tubing **37**.

In the following example of a typical operation, reference is made particularly to Fig. 1 and to the circuit diagram illustrated in Fig. 6.

Let it be assumed that a customer is seeking credit in a particular establishment and presents his credit card having the serial number 4679. The particular contact pins representing the digits of the code number have been previously set either against the tubing **37** to automatically illuminate a "valid" light, or have all been set away from the tubing to illuminate an "invalid" light, according to information previously received in regard to the credit rating of the individual to whom the credit card was issued. Placing this code number in the machine for verification, it is to be understood that the order of the digits with respect to the keyboard is of no consequence except that the same order must be followed each time a number is entered. Since the final code number is verified by the position of the verifying drum **33** and the carriage **16**, any order of entry of the code number may be followed. In the present instance let it be assumed that the holes of the bar **28** represent the units of the code, from left to right and that the corresponding set of fingers **26** represent the units, reading in the same direction. Thus, by placing the selector pin **29** in the ninth hole from the left and depressing its corresponding forward finger **26**, the digit 9 is entered. By depressing the sixth finger from the left on the set of outer fingers **24**, we have entered the "tenths" of the code or the digit 6. These two entries will determine the amount of rotation of the verifying drum **33**.

At the end of the machine the "hundredths" are selected in the same manner by depressing the seventh finger of this group of fingers **20**. On the upper side frame **15** the ninth selector button **17** is depressed which raises its corresponding stop **18** into the line of travel of the carriage **16** as shown in Fig. 2–A. Thus the full code number 4679 is entered into the machine.

Due to the simplicity of wiring and component operation, the device is operated on direct current which may be supplied by any type small converter. Alternating current could be used as well with the proper changes in the circuit diagram. In addition to the main "on-off" switch S–1, the circuit is supplied with another starting switch S–2 which is actuated when the final digit of the code is put in the machine. It will be noted here that I have also provided a pilot light **50** to give visual indication that current is being supplied to the machine. It will also be noted that the starting switch S–2 is depressed to start the movement of the drum **33** and held only momentarily until the circuit can be completed through the reverse limit switch LS–4.

When the last digit is put into the machine, switch S–2 is manually closed to complete a circuit through the coil of relay R–1 to ground, thereby closing switches MS–1 and RS–1; therefore, current is supplied through the normally closed limit switch LS–4, switch RS–1, the coil of relay R–1 to ground to thus continually energize relay R–1 until limiting switch LS–4 is open. Since switch MS–1 remains continually closed until limiting switch LS–4 is opened, current is supplied through wire 55, through limiting switch LS–1 to wire 56 and thence through the armature of motor M–2 to ground. Current is also supplied through wire 57 through switch MS–5 to the coil C–2 of motor M–2 and thence through switch MS–6 to ground. It is now apparent that current is supplied to the drum driving motor M–2 which rotates drum 33 until the depressed finger 24 automatically breaks the circuit at the selected stop position by striking the double throw limit switch LS–1 as shown in Fig. 10. With finger 24 engaging limit switch LS–1, current is supplied through the same and wire 58 to magnetic break 52 of motor M–2 and through switch S–3 to ground. Current is also supplied from wire 58 through wire 59, through the coil of relay R–2 to ground to thus close switches MS–2 and RS–2. By the throwing of switch LS–1, it is apparent that current is no longer supplied to the armature of motor M–2 and the motor stops.

With switch MS–2 closed as described above, the circuit including wire 60, switch MS–2, wire 61, double through switch LS–2, wire 63, the armature of motor M–1 to ground is completed and the circuit through wire 62, switch MS–7, the coil C–1 of motor M–1, switch MS–8 to ground is also completed. It is now apparent that motor M–1 is actuated and motor M–2 is stopped. This motor M–1 rotates the lead screw 21 for the longitudinal movement of carriage 16. As carriage 16 is moved longitudinally along U-shaped frame 15, it strikes the raised stop pin 17, representing digit 9 of the code, and hence moves the U-shaped frame until the seventh finger of the fingers 20 is pulled against bar 13, thus throwing limiting switch LS–2 to stop motor M–1 by breaking the circuit through the armature of motor M–1 while simultaneously energizing the circuit including magnetic break 51, wire 63, switch S–3 to ground and the circuit including wire 61, switch LS–2, wire 64, the coil of relay R–3, and switch S–3 to ground.

With the circuit broken to the armature of motor M–1, the carriage is stopped at a predetermined position. The construction of bar 13, finger 20 and switch LS–2 is identical with that of bar 25, finger 24, and switch LS–1 as shown in Fig. 10.

The movements thus far described have placed the wrench head of the solenoid 41 directly over the head of the proper contact pin. It will be remembered that this complete operation takes only a few seconds where considerable time would be consumed should the credit manager have to consult a set of files or other records to determine the credit rating of the individual holding the credit card.

To insure no over-travel in the rotation of the two motors M–1 and M–2, I have provided conventional magnetic breaks 51 and 52 shown diagrammatically in Fig. 6, each of which is placed in the circuit in a manner to be actuated when current ceases to flow in its corresponding motor.

The last mentioned limit switch LS–2 when thrown, as described above, energizes the coil of relay R–3 to close switch MS–3, thus completing a circuit including wire 65, switch MS–3, the coil of solenoid 41 to ground. As previously mentioned, solenoid 41 pulls its plunger inwardly to force the wrench head 44 against contact pin 35.

In the present instance, the contact pin 35 is shown as not engaging the tubing 37 and consequently not completing an electrical circuit therethrough to illuminate the "invalid" lamp 53. Therefore the current is by-passed through wire 67, switch S–5 of the relay R–4 to ground to illuminate the "valid" lamp 54 and the visual indication is made that the credit of the customer having the credit card number 4679 is good. If, on the other hand, pin 35 engages tubing 37, a circuit through wire 67, the coil of relay R–4, to tubing 37, through pin 35 to ground is completed, thereby closing switch S–7 to complete a circuit from wire 67 through invalid light 53 to ground.

If it is found that the credit status of the individual has changed since the last setting of the contact pin 35, the operator of the machine may quickly and easily make the necessary change in the machine as follows:

After the code number has been found and relay R–3 is actuated to energize the solenoid 41, the actuation of this relay also supplies current through wire 66 to the motor M–3 which is provided with a set of switches S–4 controlling the forward and reverse rotations of the motor shaft. While the solenoid holds the wrench head 44 against the contact pin 35, the motor may screw the pin into or out of engagement with the conductor tube 37 to actuate the "valid" or "invalid" light according to the credit rating of the customer. It will be remembered that this motor is used only to change the credit rating of the cusotmer or to set up a rating in the original instance.

For returning the sliding frame 15 and the verifying drum back to an original starting position, I have provided a reversing switch S–3 placed in the line between the main supply and the magnetic brakes of the two main driving motors M–1 and M–2. This is a normally closed switch for forward rotation of the motors, and must be held in the depressed position until the movements have reached a zero or starting position. To return carriage 16 and drum 33 to their initial positions, switch S–3 is thrown to complete two circuits, one being a circuit including wire 68, relay R–5 through switch S–3 to ground and the other being from wire 69 through relay R–6, wire 70, switch S–3 to ground. The supplying of current to relay R–5, closes switches S–5, MS–10, MS–11 and MS–12 while opening switches MS–5 and MS–6 thus supplying current from wire 71 through the armature of motor M–2 to ground and reversing the normal flow of current to coil C–2 to rotate drum 33 in the opposite direction while by-passing the ground connection of switch S–3 through switch S–5. Simultaneously with the actuation of motor M–2, motor M–1 is reversed by the actuation of relay R–6 wherein switches MS–7 and MS–8 are opened and switches S–6, MS–13, MS–14 and MS–15 are closed to supply current from wire 62 to the armature of motor M–1 to ground and current from wire 62 through coil C–1 to ground reversing the normal flow of current through coil C–1, while by-passing the ground of switch S–3 through switch S–6. When drum 33 and carriage 16 reach their starting positions, they momentarily open respectively switches LS–3 and LS–4 which deenergize relays R–2 and R–1 respectively to open switches MS–2 and MS–1 respectively; thus, current is no longer supplied through wires 71 and 69 and relays R–5 and R–6 return to their normal position. It will be remembered that both the limit switches LS–1 and LS–2 are also normally closed for forward rotation of the motors, and are returned by spring action to this position as soon as the stops are removed. Actuation of the reversing switch S–3 simultaneously reverses the rotation of both motors M–1 and M–2. When the drum reaches its initial starting poistion, it is made to actuate a reverse limit switch LS–3 to break the current supply to its driving motor M–1. When the carriage 16 and the frame 15 have been reversed to a starting position, the frame is made to actuate a limit switch LS–4 to break the current supply to its driving motor M–2. The machine is now ready to receive and verify another code number.

The wiring and the several switches and relays mentioned in the circuit diagram have purposely been omitted from the several detailed views of the drawing in order that the mechanical movements of the machine

might be more clearly illustrated. It is to be understood that the electrical parts mentioned are of standard makes and brands, and may be mounted on the various frame members of the machine to perform the functions as described. The several motors, of course, will be of such low speed that even though they impart a relatively fast movement to their driven members, they will not produce a shock against their several stops but will provide an exact position of the indicator carriage **16** over the proper contact pin **35**.

From the above description it is apparent that the machine provides positive identification of any character group of four digits with the various combinations thereof. It is compact and light in weight and the particular design of the several members may be changed from the illustrations shown without departing from the scope of the invention as defined by the following claims.

I claim:

1. In a machine of the class described, in combination with stop means and first and second driving means, keyboard character means selectively operable to position said stop means in the path of said first and second driving means, a tabulator having contact means adjustable to a plurality of operating positions, said tabulator being driven by said first driving means, a sensing device for sensing said contact means on said tabulator, said sensing device being driven by said second driving means for movement relative to said tabulator, the movement of said tabulator being selectively controlled by said keyboard means independently of said sensing device, and means associated with said sensing device for changing the position of said contact means, said means associated with said sensing device being operable to reset the position of said contact means at will.

2. In a machine of the class described, a rotatably mounted tabulator, a plurality of adjustable stop means carried by said tabulator, sensing means movable longitudinally of said tabulator for examining said adjustable stop means, keyboard character means, stop means operable by said keyboard character means for controlling rotation of said tabulator, other stop means operable by said keyboard character means for controlling movement of said sensing means independently of said tabulator, said keyboard character combination determining the particular adjustable stop on said tabulator examined by said sensing means, means operable to adjust said adjustable stop means to any of a plurality of possible settings, and means for indicating the adjustment of the adjustable stop means examined by said sensing means.

3. In a machine of the class described, in combination with a keyboard character means, a tabulator, elements movably positioned on said tabulator, a sensing device controllable by said keyboard character means to examine said elements, and means carried by said sensing device to alter the position of said elements with respect to said tabulator.

4. In a machine of the class described, in combination with a keyboard character means, a tabulator, elements on said tabulator, a sensing device for examining said elements, said sensing device and said tabulator being selectively controlled by said keyboard character means to position said tabulator and said sensing device for examination of said elements by said sensing device, and means associated with said sensing device to affect said elements, said last mentioned means being operable to alter the condition of said elements after being affected by said means associated with said sensing device.

5. In a machine of the class described, in combination, a cylindrical tabulator, a plurality of elements projecting from the periphery of said tabulator, means for selectively adjusting the position of said elements, a sensing device associated with said tabulator, and means for separately moving said sensing device and said tabulator with respect to each other for engagement of said sensing device with one of said elements.

6. In a machine of the class described, in combination, a tabulator, a plurality of elements threadably engaging on said tabulator, a contact within said tabulator for selective engagement by said elements, means for rotating said elements to engage said contact in at least one position of each of said elements, a sensing device associated with said tabulator, and means for positioning said sensing device and said tabulator with respect to each other for engagement of said sensing device with one of said elements.

7. In a machine of the class described, in combination, a cylindrical tabulator, a plurality of elements projecting from the periphery of said tabulator, a contact within said tabulator for selective engagement by said elements, means for adjusting the position of said elements to engage said contact in at least one position of each of said elements, a sensing device associated with said tabulator, means for positioning said sensing device and said tabulator with respect to each other for engagement of said sensing device with one of said elements, and indicating means to indicate upon engagement of one of said elements by said sensing device that said element is in engagement with said contact.

8. In a machine of the class described, in combination, a cylindrical tabulator, a plurality of elements projecting from the periphery of said tabulator, a conducting tube concentrically arranged within said tabulator for selective contact by said elements, means for adjusting the position of said elements to electrically contact said tube in at least one position of each of said elements, a sensing device associated with said tabulator, means for positioning said sensing device and said tabulator with respect to each other for engagement of said sensing device with one of said elements, an electrical circuit connected to said conducting tube and said sensing means, and indicating means associated with said electrical circuit to indicate upon engagement of one of said elements by said sensing device that said element is in electrical contact with said tube.

9. In a machine of the class described, in combination, a cylindrical tabulator, a plurality of elements projecting from the periphery of said tabulator, a conducting tube concentrically arranged within said tabulator for selective contact by said elements, means for adjusting the position of said elements to electrically contact said tube in at least one position of each of said elements, a sensing device associated with said tabulator, means for positioning said sensing device and said tabulator with respect to each other for engagement of said sensing device with one of said elements, an electrical circuit connected to said conducting tube and said sensing means, indicating means associated with said electrical circuit to indicate upon engagement of one of said elements by said sensing device that said element is in electrical contact with said tube, and means also associated with said circuit for indicating when said sensing means is engaging one of said elements.

References Cited in the file of this patent

UNITED STATES PATENTS

1,897,657	Yates	Feb. 14, 1933
2,080,100	Tauschek	May 11, 1937
2,298,939	Griffiths et al.	Oct. 13, 1942
2,371,491	Wright	Mar. 13, 1945
2,540,654	Cohen	Feb. 6, 1951
2,549,071	Dusek	Apr. 17, 1951
2,587,532	Schmidt	Feb. 26, 1952
2,606,244	Johnson et al.	Aug. 5, 1952
2,620,389	Potter	Dec. 2, 1952