Oct. 15, 1929. G. M. SNODGRASS 1,731,278

COOLER SUPPORT FOR SHEET GLASS APPARATUS

Filed Dec. 4, 1926

Fig. 1.

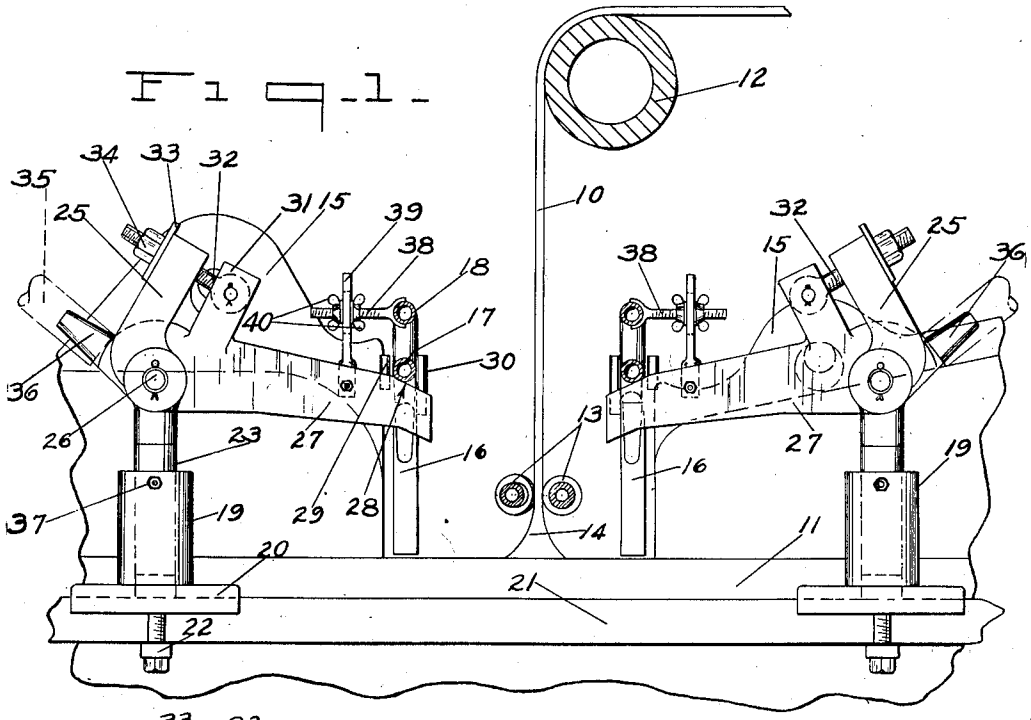

Fig. 3

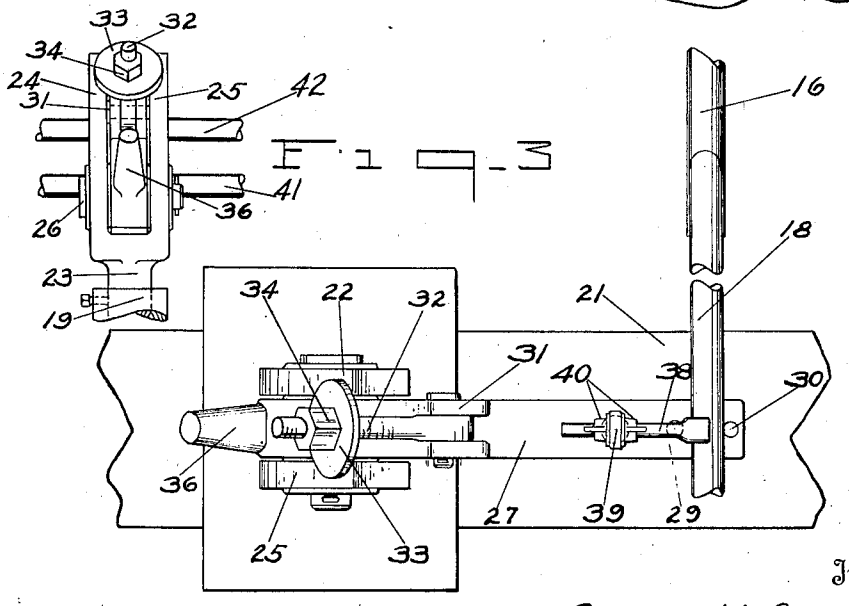

Fig. 2.

Inventor

George M. Snodgrass

By Frank Fraser

Attorney

Patented Oct. 15, 1929

1,731,278

UNITED STATES PATENT OFFICE

GEORGE M. SNODGRASS, OF CHARLESTON, WEST VIRGINIA, ASSIGNOR TO THE LIBBEY-OWENS GLASS COMPANY, OF TOLEDO, OHIO, A CORPORATION OF OHIO

COOLER SUPPORT FOR SHEET-GLASS APPARATUS

Application filed December 4, 1926. Serial No. 152,527.

This invention relates to sheet glass apparatus and more particularly to an improved support for heat absorbing means.

In certain processes for drawing sheet glass, such as that disclosed in the patent to Colburn No. 1,248,809 granted Dec. 4, 1917, a pair of coolers or heat absorbing members are arranged at opposite sides of the sheet, and relatively close to the surface of the molten glass from which the sheet is drawn, to absorb sufficient heat to permit the drawing of a good sheet of glass. It is an aim of the present invention to provide improved means for supporting these coolers or heat absorbing members.

Another object of the invention is to provide, in sheet glass apparatus, a heat absorbing member, and means for adjustably supporting said member.

Another object of the invention is to provide, in sheet glass apparatus, a heat absorbing member, means for supporting said member, and means for varying the angle of said heat absorbing member relative to said sheet.

A further object of the invention is to provide, in sheet glass apparatus, a heat absorbing member, and means for supporting said member so that it may be adjusted vertically towards and away from the sheet source, or horizontally towards and away from the sheet being drawn.

Other objects and advantages of the invention will become more apparent during the course of the following description when taken in connection with the accompanying drawings.

In the drawings forming a part of this application and wherein like numerals are employed to designate like parts throughout the same,

Fig. 1 is a vertical longitudinal section through sheet glass apparatus illustrating the present invention in use,

Fig. 2 is a top plan view of one of the supports, and

Fig. 3 is an end view thereof.

The type of machine illustrated in the drawings is similar to that disclosed in the Colburn patent above referred to, wherein a sheet of glass 10 is continuously drawn from a mass of molten glass contained within a receptacle or draw pot 11, said sheet being initially drawn in a vertical plane for a short distance after which it is deflected while still in a semi-plastic condition although substantially set in its final sheet form over a bending member 12 into the horizontal plane. The glass is then run through a combined drawing and flattening mechanism into an annealing leer where it is gradually reduced to room temperature as is well known in the art.

To maintain the sheet to width, knurled rollers 13 or other suitable means, are arranged at opposite sides of the sheet at both edges thereof and preferably in or closely adjacent the base or meniscus 14. Arranged above the draw pot 11 are cover or lip tiles 15 which tend to force any heat currents present at that position downwardly towards the surface of the molten glass contained within the receptacle 11.

Positioned at each side of the sheet 10 and immediately adjacent the draw pot 11 are the coolers or heat absorbing members 16. Each of these coolers is preferably formed of suitable metal and is designed to form a hollow elongated casing which is adapted to be internally cooled by circulating a suitable cooling medium therethrough, such as relatively cool water. This cooling medium is forced into the cooler through a pipe 17 entering one end thereof and extending longitudinally within the casing. The cooling medium then passes from the said pipe 17 through a series of openings therein into the casing and as it becomes heated, passes upwardly and exteriorly of the cooler through the outlet pipe 18 which extends horizontally above the inlet pipe 17. A pair of horizontal supports 41 and 42 are carried by the cooler at the opposite ends thereof, these supports being in horizontal alinement with the inlet and outlet pipes 17 and 18 respectively. Of course, while I have described with some particularity one certain type of cooler or heat absorbing member, yet it is to be understood that my invention is not restricted for use in connection with this particular cooler alone but that it may be used in association with any

desired form of cooler without departing from or sacrificing the spirit of the invention.

It is the aim of the present invention to provide improved means for adjustably supporting the coolers or heat absorbing members 16 and in accordance therewith, a pair of supports are provided to engage the opposite ends of each cooler. Inasmuch as all of these supports are of identical construction, a detailed description of only one of them is thought to be necessary. Each of said supports comprises a vertically arranged tubular member or cylinder 19 carried by a base 20 which is slidably mounted upon a longitudinally extending supporting beam or the like 21 and adapted to be secured in position by suitable means 22.

Slidably received within the cylinder 19 is a plunger 23, the upper end thereof being bifurcated to provide the spaced substantially vertical arms 24 and 25. Received between the arms 24 and 25 and pivotally mounted upon the pin 26 is the rear end of a forwardly extending lever 27, the forward end thereof being provided with a downwardly inclined surface as indicated at 28 and carrying spaced vertical pins 29 and 30. The inlet pipe 17 of the cooler 16 is adapted to rest upon the inclined surface 28 between the vertical pins 29 and 30 of one lever, while the alined support 41 at the opposite end of said cooler is adapted to rest upon the lever 27 of the opposite support.

Inasmuch as the inlet pipe 17 and the alined support 41 rest upon the inclined surfaces 28 of the levers 27, there will always be a tendency for them to slide forwardly and bind against the pins 30. This will have a steadying effect on the cooler and prevent lateral shifting movement thereof, thereby reducing vibration of the same to a minimum.

Carried by the lever 27 adjacent the inner end thereof is a pair of upwardly and forwardly extending ears 31 between which is pivotally mounted an adjusting screw 32 which extends rearwardly and upwardly and is received between the arms 24 and 25. Received upon the adjusting screw 32 is a washer 33 which spans the space between and engages the rear faces of the arms 24 and 25, a nut 34 being threaded upon the adjusting screw outwardly of the said washer.

In carrying out the present invention, when it is desired to raise the cooling member 16, the end of a suitable pipe or the like 35 is engaged with the stud 36 formed at the extreme rear end of the lever 27 and upon downward pressure thereon, the lever will be rocked about its pivot and the forward end thereof will be moved upwardly to raise the cooling member 16. After the cooler has been raised to the preferred height, the nut 34 is tightened to secure the said cooler in position. In order to lower the cooler, it is only necessary to loosen the nut 34 as will be apparent.

Also, should it be desired to raise or lower the supporting means as a whole, this can be accomplished by sliding the plunger 23 within the cylinder 19 after which it can be secured in position by one or any number of suitable set screws 37. Should it be desired to move the heat absorbing member 16 horizontally towards or away from the sheet 10, it is simply necessary to slide the base 20 upon the supporting beam 21 in the preferred direction and subsequently secure the same in position by the means 22.

The present invention also embodies means for adjusting the angle of the cooler or heat absorbing member 16 relative to the sheet 10, and in accordance therewith, there is secured to the outlet pipe 18 at one end of the cooler and to the support 42 at the opposite end thereof, a horizontal adjusting screw 38 which passes through an upright 39 carried by the lever 27, said adjusting screw 38 being provided at the opposite sides of said upright with suitable wing nuts or the like 40. Thus, upon loosening one of the said wing nuts 40 and subsequently tightening the opposite nut, the heat absorbing member or cooler 16 can be tilted as desired, relative to the sheet 10.

From the foregoing, it will be seen that there has been provided novel and simplified, yet durable and efficient means for supporting the coolers 16 in such a manner that they can be raised or lowered relative to the sheet source, moved horizontally towards and away from the sheet 10, or tilted at different angles relative to said sheet. With such an arrangement, a clear unobstructed view of the cooler can be had and vibration of the cooler and consequent creation of dirt will be reduced to a minimum.

It is to be understood that the form of the invention herewith shown and described is to be taken as the preferred embodiment of the same, and that various changes in the shape, size and arrangement of parts may be resorted to without departing from the spirit of the invention or the scope of the subjoined claims.

Claims:

1. In sheet glass apparatus, a heat absorbing member, means for adjusting said member horizontally, and means for varying the angle of said member relative to the sheet.

2. In sheet glass apparatus, a heat absorbing member, means for adjusting said member vertically, means for adjusting said member horizontally, and means for varying the angle of said member relative to the sheet.

3. In sheet glass apparatus, a heat absorbing member, means for supporting said member, means for moving said supporting means vertically, means for moving said supporting means horizontally, and means for varying the angle of said member relative to the sheet.

4. In sheet glass apparatus, a heat absorbing member, pivotally mounted means for

supporting said member, means for rocking said supporting means to raise or lower said member, and means for varying the angle of said member relative to the sheet.

5. In sheet glass apparatus, a heat absorbing member, pivotally mounted means for supporting said member, means for rocking said supporting means to raise or lower said member, means for securing said supporting means in the desired position, and means carried by said supporting means for varying the angle of said member relative to the sheet.

6. In sheet glass apparatus, a heat absorbing member, means for supporting the opposite ends of said member, each of said supporting means including a cylinder, a plunger slidable within said cylinder, a pivoted lever associated with said plunger for supporting said member, and means for rocking said lever to raise or lower said member.

7. In sheet glass apparatus, a heat absorbing member, separate means for supporting the opposite ends of said member, each of said supporting means including a cylinder, a plunger slidable within said cylinder, a pivoted lever associated with said plunger for supporting said member, means for rocking said lever to raise or lower said member, means for securing said lever in the desired position, and means carried by said lever for varying the angle of said member relative to the sheet.

8. In sheet glass apparatus, the combination with means for drawing a sheet vertically from a mass of molten glass, of a pair of shields arranged at opposite sides of the sheet, means for supporting said shields, means for adjusting the shields vertically, means for adjusting the angle of the shields with respect to the sheet, and means for independently moving the shields bodily toward or away from said sheet.

Signed at Charleston, in the county of Kanawha and State of West Virginia, this 30th day of November, 1926.

GEORGE M. SNODGRASS.