W. P. HUGUELET.

ENVELOP MAKING MACHINE.

APPLICATION FILED JUNE 6, 1917.

1,265,663.

Patented May 7, 1918.

2 SHEETS—SHEET 1.

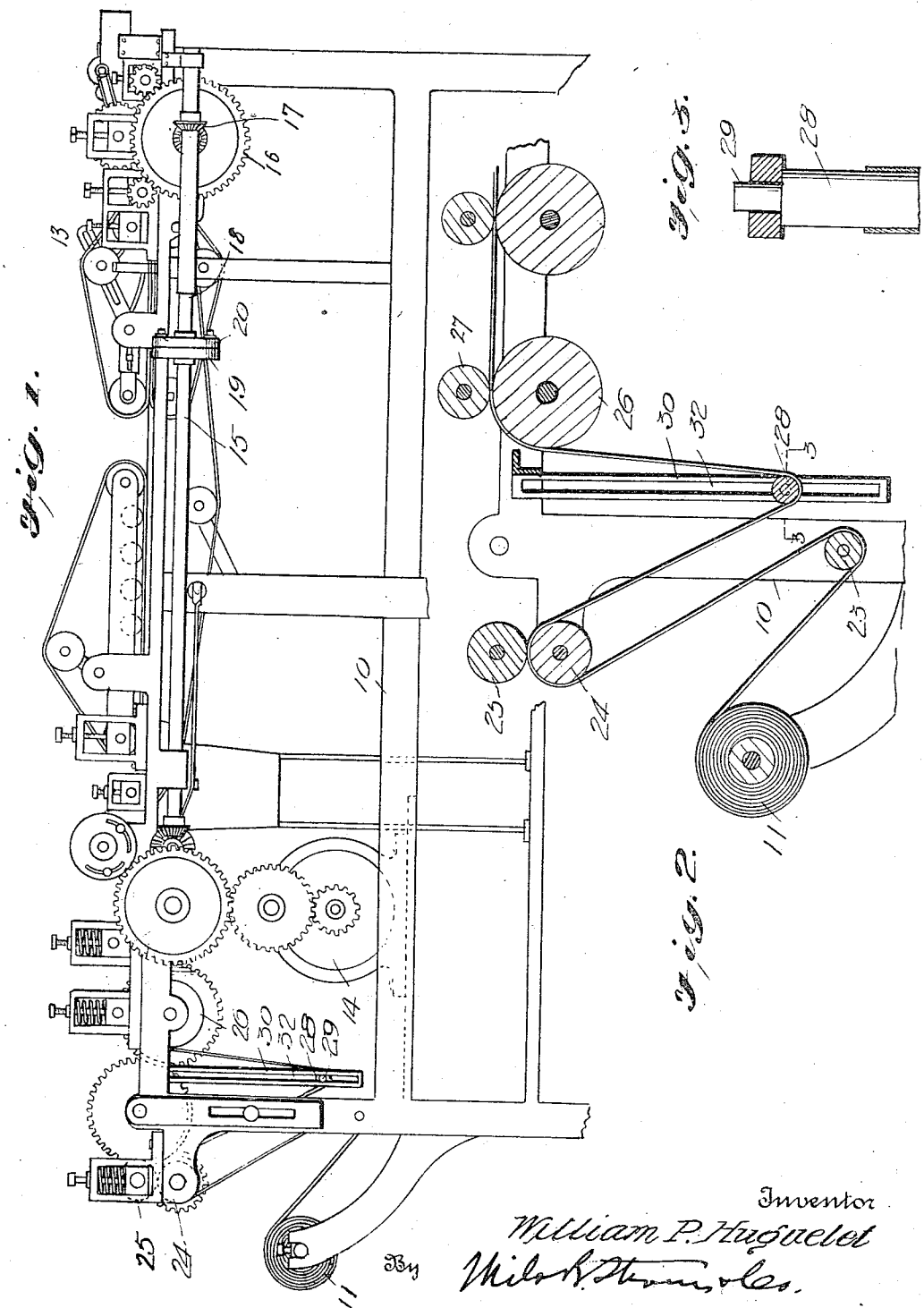

Inventor

William P. Huguelet

By Miller & Stevenson

Attorneys

W. P. HUGUELET.

ENVELOP MAKING MACHINE.

APPLICATION FILED JUNE 6, 1917.

1,265,663.

Patented May 7, 1918.

2 SHEETS—SHEET 2.

Fig. 3.

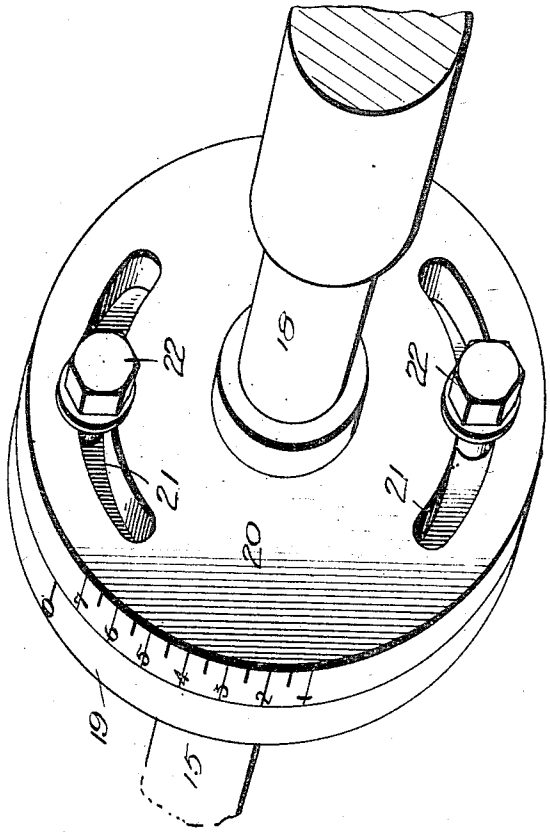

Fig. 4.

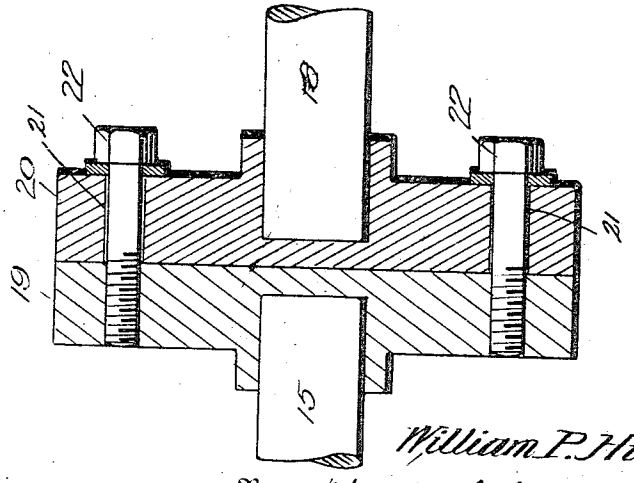

Inventor
William P. Huguelet

By Wilkinson & Co.

Attorneys

UNITED STATES PATENT OFFICE.

WILLIAM P. HUGUELET, OF CHICAGO, ILLINOIS.

ENVELOP-MAKING MACHINE.

1,265,663. Specification of Letters Patent. Patented May 7, 1918.

Application filed June 6, 1917. Serial No. 173,157.

To all whom it may concern:

Be it known that I, WILLIAM P. HUGUELET, a citizen of the United States, residing at Chicago, in the county of Cook and State of Illinois, have invented new and useful Improvements in Envelop-Making Machines, of which the following is a specification.

This invention relates to envelop machines of that type which operate on a continuous web from which the blanks are cut, the latter being gummed and folded to complete the envelops. A machine of this type is disclosed in an application filed May 9, 1916, Serial No. 96,378, and the present invention has for its object to provide the machine with a simple and efficient means for maintaining the synchronism of the cutting mechanism and the gumming and folding devices. The machine is designed to make envelops of different sizes by changing the speed at which the cutting mechanism operates, and when this is done an adjustment of the gumming and folding devices becomes necessary. The invention consists of a novel and improved device for making this adjustment, the same comprising a combination and arrangement of parts to be hereinafter described and claimed.

In order that the invention may be better understood, reference is had to the accompanying drawings forming a part of this specification.

In the drawings,

Figure 1 is a side elevation showing the application of the invention;

Fig. 2 is a longitudinal section through one end of the machine;

Fig. 3 is a cross section on the line 3—3 of Fig. 2;

Fig. 4 is a cross section of a coupling device, and

Fig. 5 is a perspective view of said device.

Referring specifically to the drawings, 10 denotes the frame of the machine, supporting at one end the roll 11 of paper from which the envelops are to be made. From this roll, the web of paper passes to a cutting cylinder 12 which cuts the blanks, and the latter then pass to a gumming and folding mechanism denoted as a whole by the reference character 13. The cutting cylinder 12 is driven from a suitable power source, such as an electric motor 14 having its shaft suitably geared to said cylinder and the web feeding devices associated therewith. One of the gears of this train is arranged to drive a countershaft 15 extending along one side of the frame and driving a spur gear 16 through a bevel gearing 17. The gear 16 drives the gumming and folding mechanism and the feed and other devices associated and coöperating therewith. Inasmuch as the cutting, gumming and folding devices, as well as the feeding means are disclosed in detail in the application hereinbefore referred to, they need not be again described, it being understood that the present invention relates only to the driving means. As shown, the driving means of the blank-cutting mechanism is connected by the countershaft 15 to the driving means of the gumming and folding devices, and said mechanism and devices are therefore driven in synchronism. If a larger envelop is to be produced, it will be necessary to speed up the cutting mechanism, which can be readily done by making suitable changes in the gear train which transmits the power of the motor 14 to said mechanism. When this change in the speed of the cutting mechanism is made, an adjustment of the gumming and folding devices becomes necessary so that these devices may operate at the proper time and in the proper place on the blank. In order that this adjustment may be easily made, the shaft 15 is divided in two alined sections, the rear section 18 of the shaft being the one which is connected to the driving gear of the gumming and folding devices. A coupling is provided between these shaft sections, so arranged that the angular position of the section 18 with respect to the forward section 15, may be varied. This coupling comprises the following parts:

On the adjacent ends of the shaft sections 15 and 18 are disks 19 and 20, respectively, they being fast on the sections. The disk 20 has two arcuate slots 21 through which bolts 22 pass into the disk 19. Thus it will be seen that when the bolts are backed, the shaft section 18 can be rotated relative to the shaft section 15 the extent of the length of the slots 21, and upon tightening up the nuts the two shaft sections are again coupled together to turn as one.

The periphery of the disk 19 has a zero or origin mark, while that of the disk 20 is graduated to correspond to the length of the envelops to be made, this being for the

purpose of facilitating the adjustment of the shaft section 18, thereby setting the gumming and folding devices at the rear end of the machine in harmony with the timing of the cutting mechanism at the front.

The web of paper is started from the roll 11 down to a roller 23 from which it passes up over a roller 24. When the web is being fed forward it has a tendency to bulge over the roller 24, and hence a roller 25 has been placed above the roller 24 so that the web passes between these two rollers. From these rollers the web is looped downward and then passes to a pair of main feed rollers 26 and 27, respectively. In the looped portion of the web is hung a tension device composed of a round metal bar 28. The ends of this bar project from the edges of the web a sufficient distance to accommodate webs of different widths, and said ends are reduced to form stems 29. At the site of these stems two narrow slides 30 are supported from a cross-member 31 of the frame 10. These slides have a long vertical slot 32 in which the stems seat and are slidable. It will be seen that the bar 28 acts through gravity as an equalizer to keep the transverse section of the web level or horizontal. This level being found automatically, the remaining section of the web will be straightened if it should start on a crooked course. The reason for the long drop of the bar is to provide sufficient room for vertical play thereof, during different pulls on the web for envelops of various lengths.

I claim—

1. In an envelop machine, a blank-forming mechanism, gumming and folding mechanism, driving means for the blank-forming mechanism, a countershaft composed of alined sections one of which is operatively connected to said driving means and the other to the gumming and folding mechanism, and a coupling between said shaft sections, the coupling being adjustable to vary the angular position of the second-mentioned shaft section relative to the first-mentioned shaft section.

2. The combination with the driving means of an envelop machine; of a countershaft composed of alined sections one of which is operatively connected to said driving means, a coupling between said shaft sections, the coupling being adjustable to vary the angular position of one of the shaft sections relative to the other shaft section, said coupling comprising disks on the adjacent ends of the shaft sections, one of said disks having arcuate slots, and fasteners passing through said slots into the other disk.

3. In an envelop machine, a blank forming mechanism, gumming and folding mechanism, driving means for the blank forming mechanism, and an angularly adjustable driving connection between said driving means and the gumming and folding mechanism.

In testimony whereof I affix my signature.

WILLIAM P. HUGUELET.

Copies of this patent may be obtained for five cents each, by addressing the "Commissioner of Patents, Washington, D. C."