US 20130127210A1

(19) **United States**

(12) **Patent Application Publication**

Jung et al.

(10) **Pub. No.: US 2013/0127210 A1**

(43) **Pub. Date: May 23, 2013**

(54) **VENTILATION APPARATUS FOR SEAT**

(71) Applicant: **KBAUTOTECH CO., LTD.**, Chungcheongnam-do (KR)

(72) Inventors: **Dal Young Jung**, Gyeonggi-do (KR); **Sang Hwa Han**, Seoul (KR); **Ji Hoon Kim**, Seoul (KR)

(73) Assignee: **KBAUTOTECH CO., LTD.**, Chungcheongnam-do (KR)

(21) Appl. No.: **13/683,227**

(22) Filed: **Nov. 21, 2012**

(30) **Foreign Application Priority Data**

Nov. 22, 2011 (KR) 10-2011-0122068

Publication Classification

(51) **Int. Cl.**
A47C 7/74 (2006.01)

(52) **U.S. Cl.**
CPC *A47C 7/744* (2013.01); *A47C 7/748* (2013.01)
USPC **297/180.12**; 297/180.13

(57) **ABSTRACT**

A ventilation apparatus for a seat in which a positive temperature coefficient (PTC) heater is equipped in the ventilation apparatus which blows air to the seat in order to prevent overheating as well as to reduce heat loss. The ventilation apparatus includes a seat having a back and a seating section each of which has a discharge passage which discharges air toward a user. A blower is disposed in each discharge passage of the seat. A PTC heater is disposed inside each blower, and heats air that is being blown. A control unit simultaneously or individually controls the blowers and the PTC heaters. Accordingly, heating efficiency is improved and safety is increased.

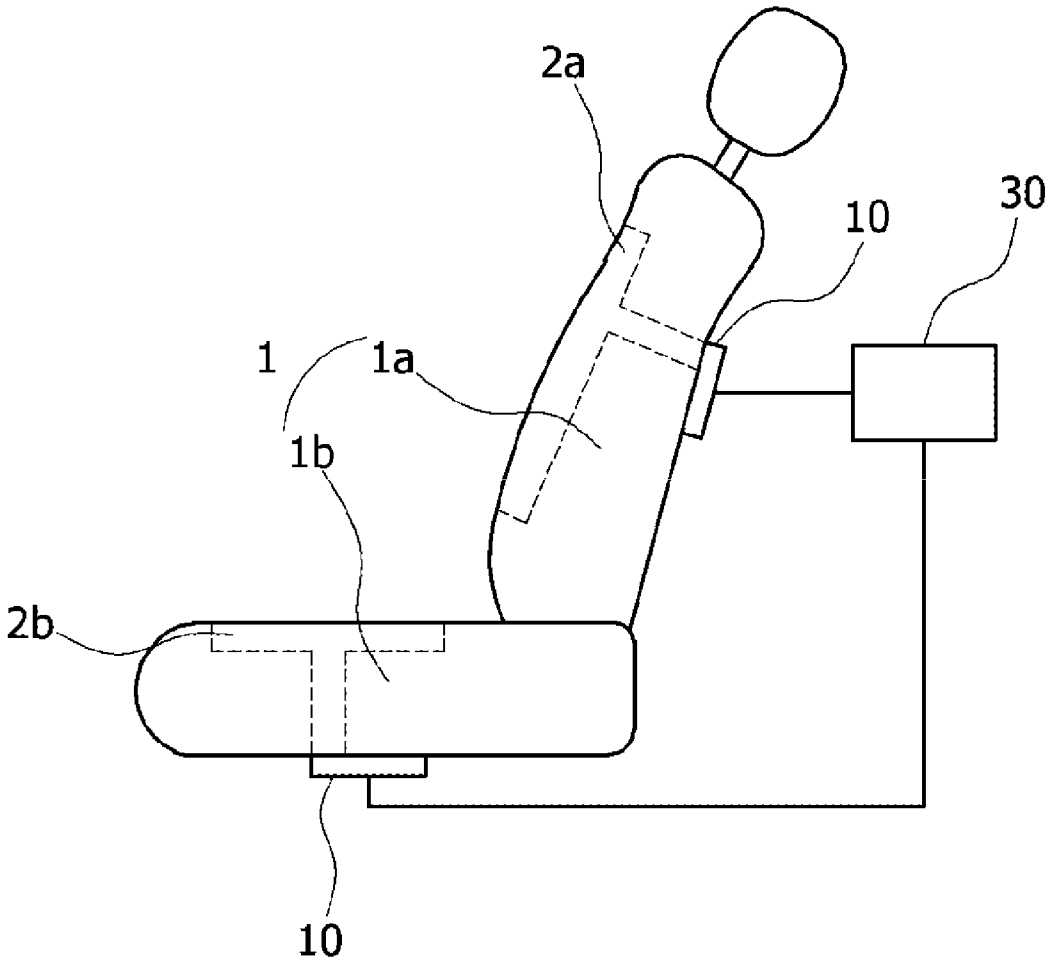

【Fig. 1】

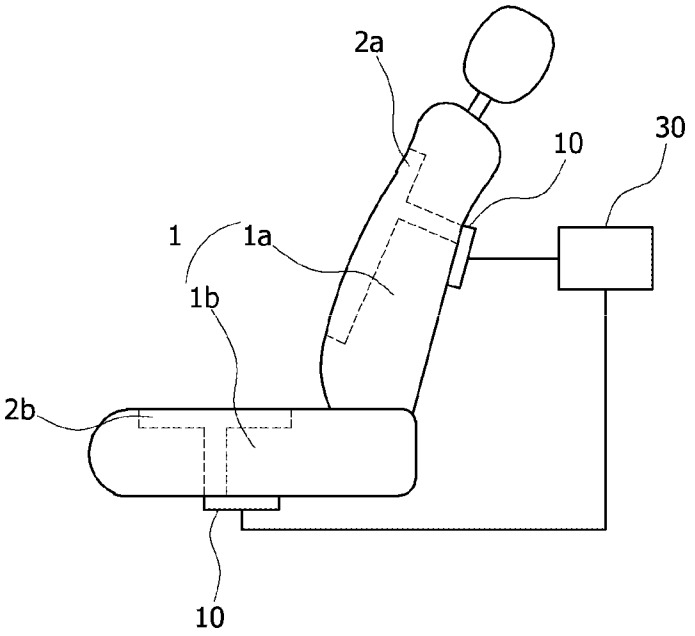

【Fig. 2】

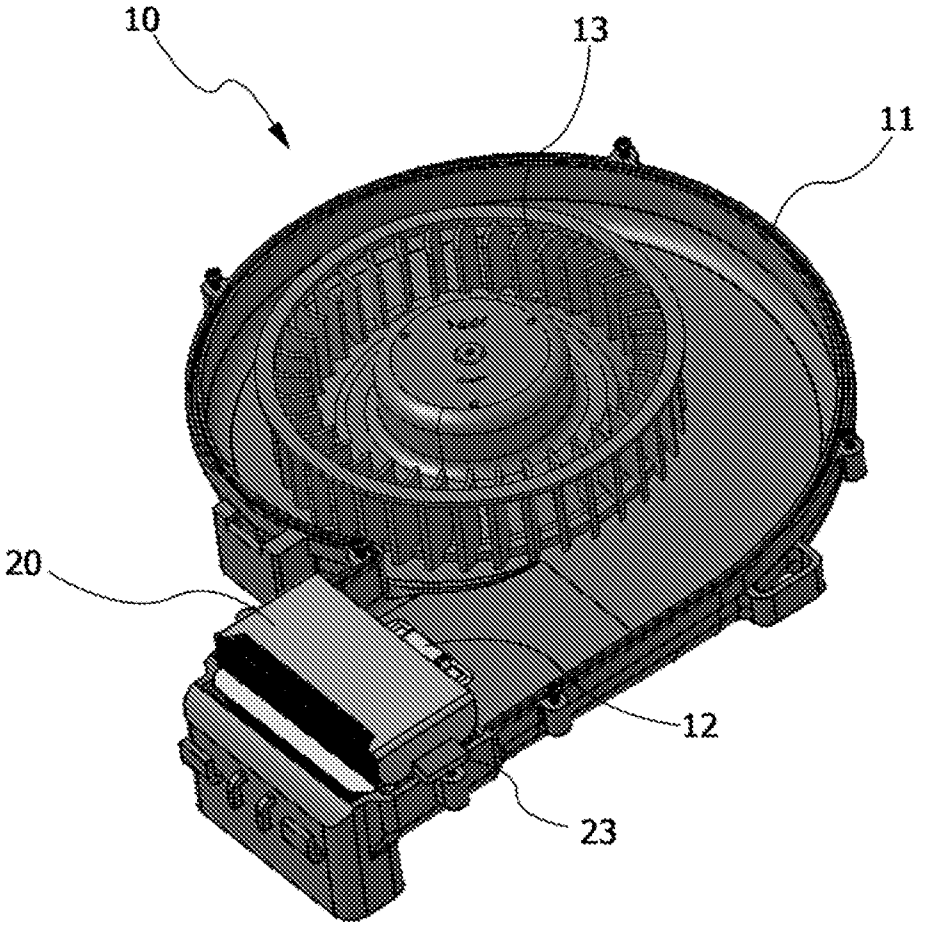

【Fig. 3】

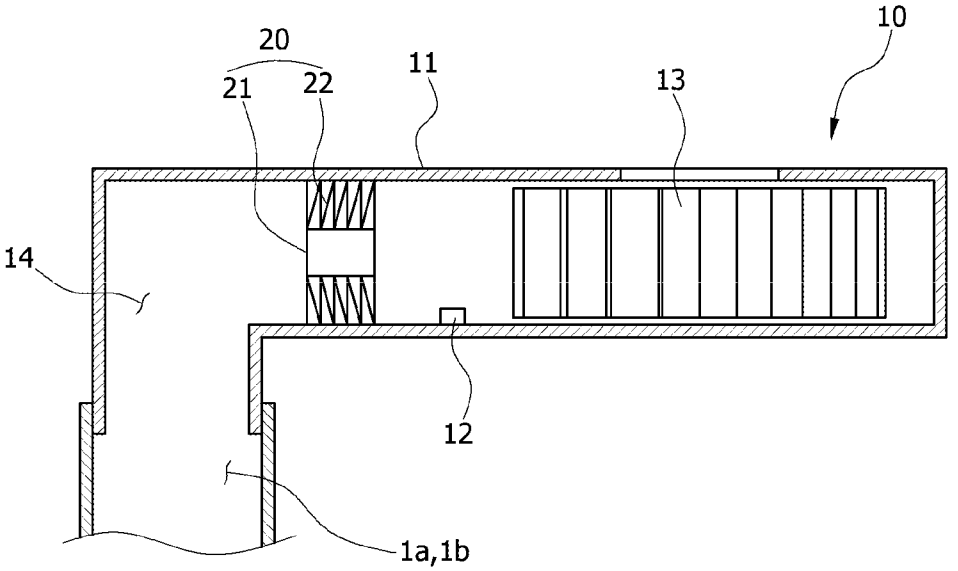

VENTILATION APPARATUS FOR SEAT

CROSS-REFERENCE TO RELATED APPLICATIONS

[0001] This application claims priority to Korean Patent Application No. 10-2011-0122068, filed Nov. 22, 2011, the entire contents of which are hereby incorporated by reference herein.

FIELD OF THE INVENTION

[0002] The present invention relates, in general, to a ventilation apparatus for a seat and, more particularly, to a ventilation apparatus for a seat in which a positive temperature coefficient (PTC) heater is equipped in the ventilation apparatus which blows air to the seat in order to prevent overheating as well as to reduce heat loss.

BACKGROUND

[0003] In general, a seat of a vehicle serves to provide a cozy feeling of seating using a cushion.

[0004] Recently, in response to the trends of consumers who demand convenience in addition to basic functionality for vehicle parts, a variety of convenience devices are being equipped in a vehicle seat.

[0005] Among such convenience devices for a seat, most widely used is a seat-warming apparatus in which heating wires are disposed in the seat in order to provide warmth while driving in winter. Such a seat-warming apparatus is applied to seats of a variety of vehicles, since there are significant difficulties in designing and construction. However, the ability of the heating wires to make a user warm is limited.

[0006] In order to solve this problem, an approach in which a cooler is disposed in the seat and a thermoelement is disposed in the cooler in order to supply heated air to the seat is used. However, when heating the air using the thermoelement, there is a problem in that a separate overheat-preventing means is essentially needed in order to prevent damage due to overheating.

[0007] In addition, when the thermoelement is used, there is another problem in that a certain amount of air is discarded attributable to the characteristics of the thermoelement.

SUMMARY

[0008] Accordingly, the present invention has been made keeping in mind the above problems occurring in the related art, and the present invention is intended to propose a ventilation apparatus for a seat in which a positive temperature coefficient (PTC) heater is equipped in the ventilation apparatus which blows air to the seat in order to prevent overheating as well as to reduce heat loss.

[0009] In order to achieve the above object, according to one aspect of the present invention, there is provided a ventilation apparatus for a seat which includes a seat comprising a back and a seating section, each of the back and the seating section having a discharge passage which discharges air toward a user; blowers each disposed in a corresponding discharge passage of the seat; PTC heaters each disposed inside a corresponding one of the blowers, the PTC heaters heating air that is being blown; and a control unit which simultaneously or individually controls the blowers and the PTC heaters.

[0010] In an exemplary embodiment, each of the blowers may include a housing and a temperature sensor disposed inside the housing, the temperature sensor detecting a temperature of air which is taken in and transferring the detected temperature to the control unit.

[0011] In an exemplary embodiment, the temperature sensor may be disposed between a blower fan disposed inside the blower and a corresponding one of the PTC heaters.

[0012] In an exemplary embodiment, the control unit may control a rate at which the blower fan rotates and power which is supplied to the PTC heater depending on the temperature which is transferred from the temperature sensor.

[0013] In an exemplary embodiment, the control unit may perform control so that one of the PTC heaters which is disposed in the back **1***a* is set to a higher temperature when the PTC heaters are operated, and so that one of the blower fans which is disposed in the back rotates at a slowed-down rate when no PTC heaters are operated.

[0014] In an exemplary embodiment, each of the blowers may include a connecting duct in a predetermined portion thereof, the connecting duct being connected to a corresponding one of the discharge passages such that all of air that has passed through a place in which a corresponding one of the PTC heaters is disposed is supplied to a corresponding one of the discharge passages.

[0015] In an exemplary embodiment, each of the PTC heaters may include a PTC device connected to an external power source to receive power therefrom; and heat exchange fins disposed on both sides of the PTC device.

[0016] In an exemplary embodiment, each of the PTC heaters may further include a connector electrically connected to the PTC device, the connector being formed in a place of the housing which forms an outer surface of the blower, and the PTC heater being disposed in the place of the housing.

[0017] According to embodiments of the invention, unlike the ventilation structure of the related art which uses heat wires, the ventilation apparatus for a seat does not need an overheat-preventing means attributable to the characteristics of the PTC heater, thereby reducing the number of parts and improving safety.

[0018] While the thermoelement of the related art which uses heat wires wastes a certain amount of heat, the ventilation apparatus for a seat of the invention uses all air that is being blown for heating or ventilation, thereby improving efficiency.

[0019] Furthermore, it is possible to simultaneously or individually control the heating and ventilation of the back and the seating section and to control the blower fans and the PTC heaters depending on the temperature that is detected by the temperature sensors, each of which is disposed between a corresponding blower fan and a corresponding PTC heater, thereby improving efficiency.

BRIEF DESCRIPTION OF THE DRAWINGS

[0020] The above and other objects, features and other advantages of the present invention will be more clearly understood from the following detailed description when taken in conjunction with the accompanying drawings, in which:

[0021] FIG. **1** is a configuration view schematically showing a ventilation apparatus for a seat according to an exemplary embodiment of the invention;

[0022] FIG. **2** is a perspective view of the blower shown in FIG. **1**; and

[0023] FIG. **3** is a cross-sectional view of the blower shown in FIG. **1**.

DETAILED DESCRIPTION

[0024] Reference will now be made in greater detail to a ventilation apparatus for a seat according to an exemplary embodiment of the invention with reference to the accompanying drawings.

[0025] FIG. **1** is a configuration view schematically showing a ventilation apparatus for a seat according to an exemplary embodiment of the invention, FIG. **2** is a perspective view of the blower shown in FIG. **1**, and FIG. **3** is a cross-sectional view of the blower shown in FIG. **1**.

[0026] As shown in FIG. **1** to FIG. **3**, the ventilation apparatus for a seat according to one exemplary embodiment of the invention includes a seat **1** which includes a back **1***a* and a seating section **1***b*, blowers **10** which are mounted on the back **1***a* and the seating section **1***b*, and positive temperature coefficient (PTC) heaters **20** each of which is disposed inside a corresponding blower **10** to heat air that is being blown. Also provided is a control unit which controls the blowers **10** and the PTC heaters **20**. Although it is described by way of example that the seat **1** is disposed inside the vehicle, the present invention is not limited to the vehicle seat but is applicable to all sorts of seats.

[0027] Discharge passages **2***a* and **2***b* are formed inside the back **1***a* and the seating section **1***b*. Air that is forcibly blown by the blowers **10** is introduced into the discharge passages **2***a* and **20***b*, which in turn discharge the air toward users.

[0028] Each blower **10** includes a housing **11**, a blower fan **13** and a connecting duct **14**. The housing **11** has an inner storage space defined therein, and has an inlet in a side portion thereof. The blower fan **13** is disposed in the inlet side of the housing **11** in order to take in and forcibly blow outer air. The connecting duct **14** is provided in a predetermined portion of the housing **11**. The PTC heater **20** is disposed in an intermediate portion of the passage through which the air which is forcibly blown passes. A temperature sensor **12** is disposed in the passage through which the air that is blown is guided, between the blower fan **13** and the PTC heater **20**.

[0029] The control unit **30** receives a temperature signal from a temperature sensor **12** which detects the temperature of the air that is blown by the blower fan **13**, and controls the rate at which the blower fan **13** rotates and the amount of heat which the PTC heater **20** generates. That is, the control unit **30** controls power that is supplied to the blower fan **13** and the PTC heater **20**. It is preferred that the control unit **30** controls the components such that the temperature of the PTC heater **20** which is disposed in the back **1***a* is set to be higher when the PTC heater **20** operates, i.e. at the time of heating. In contrast, is preferred that the control unit **30** control the components such that the rate at which the blower fan **13** disposed in the back **1***a* is slowed when no PTC heaters **20** operate, i.e. at the time of blowing. It is possible to freely adjust the amount of heat which the PTC heaters **20** generate and the rate at which the blower fan **13** rotates at the time of heating and blowing at the request of the user.

[0030] Each PTC heater **20** includes a PTC device **21**, heat exchange fins **22** and a connector **23**. The PTC device **21** is connected to an external power source and radiates heat when receiving power from the external power source. The heat exchange fins **22** are mounted on both sides of the PTC device **21**. The connector **23** is electrically connected to the PTC device **21**, with one portion of the connector **23** being exposed to the outside and connected to the external power source. The PTC device **21** is a semiconductor device which experiences a sharp increase in electrical resistance when its temperature becomes equal to or higher than a Curie temperature (about 180° C. to 200° C.). The PTC device has the function of self-temperature control to maintain a predetermined heating temperature irrespective of surrounding temperatures when a voltage is applied thereto. Consequently, electrical resistance increases at a predetermined temperature (about 180° C. to 200° C.) or higher and the amount of current decreases, thereby lowering the temperature of heat.

[0031] The connecting duct **14** is provided in a predetermined portion of the blower **10**, in particular, in a predetermined portion of the housing **11**, such that all air which is forcibly blown by the blower fan **13** can be supplied to the discharge passage **1***a* or **1***b* through the PTC heater **20**. The connecting duct **14** is connected to the corresponding discharge passage **1***a* or **1***b*. Although it is preferred that the connecting duct **14** be integrally formed in the housing **11**, the connecting duct can be formed of a separate member, which is coupled to the housing.

[0032] The ventilation apparatus for a seat of this embodiment as configured above provides indoor air to the seat by taking in indoor air using the blower **10** and changing the number of revolutions per unit time of the blower **10** in summer. In winter, ventilation apparatus heats the seat using the PTC heater **20** by sensing the temperature of air which is being taken in. The control unit for a seat is formed of one electronic control unit (ECU), and can simultaneously or individually control the blowers **10** and the PTC heaters **20** disposed in the back **1***a* and the seating section **1***b*.

[0033] The control unit adjusts the rate at which the blower fan **13** rotates and the amount of heat which the PTC heater **20** generates, depending on values which are set according to temperatures. In an example, when it is intended to heat the seat, the blower fan **13** is rotated while the PTC heater **20** is operated so that air which is forcibly blown by the blower fan **13** is heated while passing through the PTC heater **20**. All of the heated air is supplied to the discharge passages **1***a* and **1***b* through the connecting ducts **14**. The heated air which has been supplied to the discharge passages **1***a* and **1***b* is discharged toward the user who is sitting in the seat **1** so that heating is carried out. In addition, in the case of heating, it is preferred for the temperature at which the PTC heater **20** disposed in the back **1***a* generates heat to be set to be higher. However, it is also possible to set the temperature of one of the PTC heaters **20** to be higher or the temperatures of the PTC heaters **20** to be the same as required by the user.

[0034] In another example, when only the blowing operation is intended for the seat, the operation of the PTC heaters **20** is stopped and only the blower fans **13** are rotated so that air that has been forcibly blown by the blower fans **13** is supplied to the discharge passages **1***a* and **1***b* through the connecting ducts **14**. The air that has been supplied to the discharge passages **1***a* and **1***b* is discharged to the user who is sitting in the seat **1** so that the user feels cool because of the air that is discharged. When the blowing operation is performed as described above, it is preferred for the blower fan **13** of the blower **10** which is disposed in the seating section **1***b* to be rotated faster than the blower fan **13** of the blower **10** which is disposed in the back **1***a*. It is also possible to control the blower fans **13** which are disposed in the back **1***a* and the seating section **1***b* so that one blower fan rotates faster than the other blower fan **13** or both the blower fans rotate at the same rate.

[0035] In addition, since the present invention uses the PTC heaters **20**, overheating is prevented owing to the character-

istics of the PTC heaters **20**, thereby improving safety. It is also possible to reduce the number of parts since no separate overheat-preventing means is required. Each PTC heater **20** is provided with the connector **23** which is exposed out of the housing **11** such that the PCT heater can be easily connected to the external power source.

[0036] Although the exemplary embodiments of the present invention have been described for illustrative purposes, those skilled in the art will appreciate that various modifications, additions and substitutions are possible, without departing from the scope and spirit of the invention as disclosed in the accompanying claims.

What is claimed is:

1. A ventilation apparatus for a seat comprising:

a seat comprising a back and a seating section, each of the back and the seating section having a discharge passage which discharges air toward a user;

blowers each disposed in a corresponding discharge passage of the seat;

positive temperature coefficient heaters each disposed inside a corresponding one of the blowers, the positive temperature coefficient heaters heating air that is being blown; and

a control unit which simultaneously or individually controls the blowers and the positive temperature coefficient heaters.

2. The ventilation apparatus of claim **1**, wherein each of the blowers comprises a housing and a temperature sensor disposed inside the housing, the temperature sensor detecting a temperature of air which is taken in and transferring the detected temperature to the control unit.

3. The ventilation apparatus of claim **2**, wherein the temperature sensor is disposed between a blower fan disposed inside the blower and a corresponding one of the positive temperature coefficient heaters.

4. The ventilation apparatus of claim **2**, wherein the control unit controls a rate at which the blower fan rotates and power which is supplied to the positive temperature coefficient heater depending on the temperature which is transferred from the temperature sensor.

5. The ventilation apparatus of claim **4**, wherein the control unit performs control so that one of the positive temperature coefficient heaters which is disposed in the back **1***a* is set to a higher temperature when the positive temperature coefficient heaters are operated, and so that one of the blower fans which is disposed in the back rotates at a slowed-down rate when no positive temperature coefficient heaters are operated.

6. The ventilation apparatus of claim **1**, wherein each of the blowers comprises a connecting duct in a predetermined portion thereof, the connecting duct being connected to a corresponding one of the discharge passages such that all of air that has passed through a place in which a corresponding one of the positive temperature coefficient heaters is disposed is supplied to a corresponding one of the discharge passages.

7. The ventilation apparatus of claim **1**, wherein each of the positive temperature coefficient heaters comprises:

a positive temperature coefficient device connected to an external power source to receive power therefrom; and

heat exchange fins disposed on both sides of the positive temperature coefficient device.

8. The ventilation apparatus of claim **7**, wherein each of the positive temperature coefficient heaters further comprises a connector electrically connected to the positive temperature coefficient device, the connector being formed in a place of the housing which forms an outer surface of the blower, and the positive temperature coefficient heater being disposed in the place of the housing.

* * * * *