(12) STANDARD PATENT (11) Application No. **AU 2010272531 B2**
(19) AUSTRALIAN PATENT OFFICE

(54) Title
Cigarette pack, cigarette pack closing mechanism and associated blanks

(51) International Patent Classification(s)
B65D 85/10 (2006.01) ***B65D 5/18*** (2006.01)

(21) Application No: **2010272531** (22) Date of Filing: **2010.07.14**

(87) WIPO No: **WO11/006943**

(30) Priority Data

(31) Number	(32) Date	(33) Country
09165837.7	**2009.07.17**	**EP**

(43) Publication Date: **2011.01.20**
(44) Accepted Journal Date: **2014.10.30**

(71) Applicant(s)
JT International SA

(72) Inventor(s)
Collins, Tim

(74) Agent / Attorney
Davies Collison Cave, Level 15 1 Nicholson Street, MELBOURNE, VIC, 3000

(56) Related Art
GB 133737 A (EDWARD VALPY) 20 October 1919

(12) INTERNATIONAL APPLICATION PUBLISHED UNDER THE PATENT COOPERATION TREATY (PCT)

(19) World Intellectual Property Organization
International Bureau

(43) International Publication Date
20 January 2011 (20.01.2011)

PCT

(10) International Publication Number
WO 2011/006943 A1

(51) International Patent Classification:
B65D 85/10 (2006.01) *B65D 5/18* (2006.01)

(21) International Application Number:
PCT/EP2010/060169

(22) International Filing Date:
14 July 2010 (14.07.2010)

(25) Filing Language: English

(26) Publication Language: English

(30) Priority Data:
09165837.7 17 July 2009 (17.07.2009) EP

(71) Applicant *(for all designated States except US)*: **JT INTERNATIONAL SA** [CH/CH]; 1 rue de la Gabelle, 1211 Geneva 26, CH-1211 Geneva (CH).

(72) Inventor; and

(75) Inventor/Applicant *(for US only)*: **COLLINS, Tim** [GB/GB]; 16 Mount Pleasant, West Horsley, Leatherhead, Surrey KT24 6BL (GB).

(74) Agent: **GILL JENNINGS & EVERY LLP**; Broadgate House, 7 Eldon Street, London, Greater London EC2M 7LH (GB).

(81) Designated States *(unless otherwise indicated, for every kind of national protection available)*: AE, AG, AL, AM, AO, AT, AU, AZ, BA, BB, BG, BH, BR, BW, BY, BZ, CA, CH, CL, CN, CO, CR, CU, CZ, DE, DK, DM, DO, DZ, EC, EE, EG, ES, FI, GB, GD, GE, GH, GM, GT, HN, HR, HU, ID, IL, IN, IS, JP, KE, KG, KM, KN, KP, KR, KZ, LA, LC, LK, LR, LS, LT, LU, LY, MA, MD, ME, MG, MK, MN, MW, MX, MY, MZ, NA, NG, NI, NO, NZ, OM, PE, PG, PH, PL, PT, RO, RS, RU, SC, SD, SE, SG, SK, SL, SM, ST, SV, SY, TH, TJ, TM, TN, TR, TT, TZ, UA, UG, US, UZ, VC, VN, ZA, ZM, ZW.

(84) Designated States *(unless otherwise indicated, for every kind of regional protection available)*: ARIPO (BW, GH, GM, KE, LR, LS, MW, MZ, NA, SD, SL, SZ, TZ, UG, ZM, ZW), Eurasian (AM, AZ, BY, KG, KZ, MD, RU, TJ, TM), European (AL, AT, BE, BG, CH, CY, CZ, DE, DK, EE, ES, FI, FR, GB, GR, HR, HU, IE, IS, IT, LT, LU, LV, MC, MK, MT, NL, NO, PL, PT, RO, SE, SI, SK, SM, TR), OAPI (BF, BJ, CF, CG, CI, CM, GA, GN, GQ, GW, ML, MR, NE, SN, TD, TG).

Published:

— *with international search report (Art. 21(3))*

(54) Title: CIGARETTE PACK, CIGARETTE PACK CLOSING MECHANISM AND ASSOCIATED BLANKS

Fig.4.

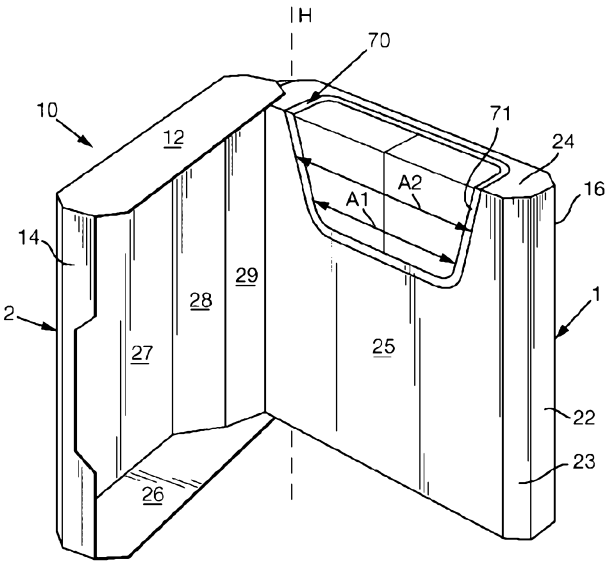

(57) Abstract: A hinge-cover cigarette pack (10) comprises an inner box (1) having a top face, a bottom face and a plurality of longitudinal faces connecting the top face to the bottom face, one of the longitudinal faces being a front face. The pack further comprises a cover (2) arranged to cover the entire surface of the front face when the pack is in a closed position, the cover being hingedly attached to a first longitudinal side face of the inner box. The pack also comprises a linking element for attaching the cover to a second longitudinal side face of the inner box, the linking element being arranged to bias the relative position of the inner box to the cover in a first configuration, which first configuration is approximately half-way between a fully open configuration and a fully closed configuration.

WO 2011/006943 A1

2010272531 01 Oct 2014

CIGARETTE PACK, CIGARETTE PACK CLOSING MECHANISM AND ASSOCIATED BLANKS

The present invention relates to a cigarette pack and blanks therefor. In particular, the present invention relates to a hinged-cover cigarette pack having an improved closing mechanism.

Hinged-lid cigarette boxes made of varying thicknesses of cardboard are known. Typically, these packs comprise lids which open from the top and allow a user to access cigarettes which are situated inside the box.

Recently, a growing number of cigarette boxes have been designed to allow the cigarettes to be accessed in new ways, such as, for example, the use of inner boxes which are slidably engaged with outer frames. There has also been a growing desire to manufacture cardboard cigarette packs which mimic cigarette cases *circa* 1900, which were often made of very high quality materials, such as precious metals. One of the reasons for attempting to produce such packs is that consumers often associate the quality of a product with the quality of the packaging in which the product is sold, or dispensed.

These known packs, which typically comprise side opening mechanisms (i.e. similar to a book) have several disadvantages. One disadvantage relates to the fact that the cardboard used in the manufacture of cigarette packs is generally quite thin and it is therefore very difficult to produce a pack which is solid enough to allow a book-type, or oyster shell-like, opening mechanism, without increasing the thickness of the cardboard, a design decision which significantly increases cost and manufacturing complexity.

Accordingly, when known book-type boxes are produced, they typically result in flimsy packs which the consumer identifies with a product of poor quality. For example, when applying closing pressure on known book-type cardboard packs, it is common for the packs to bend, or even buckle, in a transverse direction, thereby preventing the user from properly closing the pack.

Another disadvantage with known book-type opening mechanism is that they cannot reproduce the same closing action as cigarette cases, which cigarette cases use metal hinges and therefore have a certain resistive quality to their closing action. The result of this significant difference in closing action

2010272531 01 Oct 2014

produces a furthering of the user's impression of a poor quality pack and, by association, a poor quality product.

Accordingly, there is a need for a cigarette pack which has a book-type opening mechanism, but which replicates not only the look of traditional cigarette cases, but also their feel.

The present invention provides a hinge-cover cigarette pack comprising:

an inner box having a top face, a bottom face and longitudinal faces connecting the top face to the bottom face, one of the longitudinal faces being a front face;

a cover arranged to cover the entire surface of the front face when the pack is in a closed position, the cover being hingedly attached to a first longitudinal side face of the inner box; and

a linking element for attaching the cover to a second longitudinal side face of the inner box,

wherein the linking element is arranged to bias the relative position of the inner box to the cover in a first configuration, which first configuration is approximately half-way between a fully open configuration and a fully closed configuration.

The preferred embodiments of the invention overcome the problems associated with the prior art.

Preferably, the inner box is an octagonal parallelepiped having a top face, a bottom face, a front face, a rear face, two side face and four bevel faces; and

the cover being fixed to both the rear face of the inner box and, via the linking element, to one of the bevel faces of the inner box.

Preferably, the cover, when closed, is essentially of the shape of an octagonal parallelepiped having a top wail, a bottom wall, a front wall, a rear wall, two side walls and three bevel walls;

the rear wall of the cover being arrange to be fixed to the rear face of the inner box.

Preferably, the cover and the inner box are arranged such that, in a closed position:

the front wall of the cover is superimposed on the front face of the inner box;

the top wall of the cover covers the top face of the inner box;

2010272531 01 Oct 2014

the bottom wall of the cover covers the bottom face of the inner box; and the side walls of the cover covers the side faces of the inner box.

Preferably, the above hinge-cover cigarette pack further comprises:

biasing means for biasing the pack in the closed position.

Preferably, the hinge-cover cigarette pack of any of the preceding claims further comprises:

a tab fixed to one of the four bevel faces such that it is operable as a handle to facilitate the opening of the pack by a user.

In accordance with a preferred embodiment of the present invention, there is provided a blank for producing the above inner box, which blank comprises:

a rear panel disposed between a first front panel and a second front panel, the first front panel being arranged to be fixed under the second front panel when the blank is folded into the inner box.

Preferably, the first front panel is provided with a first aperture for accessing the interior of the inner box and the second front panel is provided with a second aperture for accessing the interior of the box, the first aperture having smaller dimensions than the second aperture.

Preferably, the second aperture is covered by a removable panel made of the same material as the inner box.

The present invention also provides a blank for producing the above cover, comprising:

a first top wall panel and a second top wall panel arranged to be folded and fixed upon one another;

a first bottom wall panel and a second bottom wall panel arranged to be folded and fixed upon one another;

a first front wall panel and a second front wall panel being arranged to be folded on top of each other in order to form the front wall of the cover;

a rear panel suitable to be attached to the rear face of the inner box; and

a linking element attached to the second front wall and being suitable to attach the front wall to the inner box and further being arranged to bias the relative position of the inner box to the cover in a first configuration, which first configuration is approximately half-way between a fully open configuration and a fully closed configuration.

2010272531 07 Oct 2014

As will be appreciated, there are provided several advantages over the prior art. For example, because the linking element biases the relative position of the cover and the inner pack in a semi- closed position, the pack will close in a two-step action, which will give the impression to the user that pack of high quality.

The present invention will now be described, by way of non-limiting example only, with reference to the accompanying drawings, in which:

Figure 1 is a front view of a first embodiment of a hinged pack in accordance with the present invention;

Figure 2 is a perspective view of the hinged pack of Figure 1, shown in a closed position;

Figure 3 is a rear view of the hinged pack of Figure 1, shown in a closed position;

Figure 4 is a perspective view of the hinged pack of Figure 1, shown in an open position;

Figure 5 is a top view showing hidden details of the hinged pack of Figure 1, the pack being in a first position;

Figure 6 is a front view of a blank for making the inner pack of the hinged pack of Figure 1;

Figure 7 is a front view of a blank for making the lid and connecting means of the hinged pack of Figure 1;

Figure 8 is a front view of a second embodiment of a hinged pack in accordance with the present invention;

Figure 9 is a perspective view of the hinged pack of Figure 8, shown in a closed position;

Figure 10 is a rear view of the hinged pack of Figure 8, shown in a closed position;

Figure 11 is a perspective view of the hinged pack of Figure 8, shown in an open position;

Figure 12 is a top view showing hidden detail of the hinged pack of Figure 8, the pack being in a first position;

Figure 13 is a front view of a blank for making the inner pack of the hinged pack of Figure 8; and

Figure 14 is a front view of a blank for making the lid and connecting means of the hinged pack of Figure 8.

Figure 1 is a front view of a first embodiment of the hinged pack 10 in accordance with the present invention. As can be seen from Figure 1, the cover 2 of the hinged pack comprises a front face 11, a top face 12 and a bottom face 13 having the same dimensions as the top face 12. Also, the cover 2 includes side face 14 and side face 15, as well as bevelled edge 18, positioned between side face 15 and front face 11, and bevelled edge 17, positioned between front face 11 and side face 14. The hinge axis H is hidden from view on the opposite side of the pack.

Figure 2 is a perspective view of the first embodiment of the hinged pack 10 in accordance with the present invention. The hinged pack 10 of Figure 2 is shown in a closed position. The hinged pack 10 includes a cover 2 having a front face 11, a top face 12, a side face 14 and bevelled edge 17 positioned between the side face 14 and front face 11. Side face 14 also includes an aperture through which the side face 22 of the inner pack 1 can be seen. The hinge axis H is hidden from view on the opposite side of the pack.

Figure 3 is a rear view of the first embodiment of the hinged pack 10 in accordance with the present invention. The hinged pack 10 of Figure 3 is shown in a closed position. The cover 2 further includes rear face 20, rear bevelled edge 19, and hinge axis H, which is defined by the edge formed between side face 15 and bevelled edge 19. Figure 3 also shows the bevelled edge 16 of the inner pack 1.

In the embodiment shown in Figure 3, the rear face 20 of cover 2 is substantially identical in dimensions to the rear face (not shown) of the inner pack 1, though in other embodiments these elements may be of different dimensions. The rear face 20 of the cover 2 defines one of two sides of the rear wall of cover 2, the other side of which (not shown) is fixed to the rear face (not

2010272531 01 Oct 2014

shown) of the inner pack 1. The lip 21, which is part of the cover 2, is also fixed to the bevelled edge 16 of the inner pack 1.

The fixing of these elements together, as well as the fixing of any other elements in embodiments of the present invention, can be done using known fixing methods, such as gluing, chemical bonding, mechanical bonding, etc.

Figure 4 is a perspective view of hinged pack 10 in accordance with the present invention. Figure 4 shows the pack 10 when the cover 2 is pulled away from the inner pack 1 by relative rotation of part of the cover 2 and the inner pack 1, around the hinge axis H. The cover 2 includes an inner front face 27, as well as an inner bottom face 26 and an inner top face (not shown). The inner pack 1 also comprises front face 25, top face 24, a front right-hand side bevel 23, a front left-hand side bevel 72 (not shown in Figure 4) and side face 22, which is partially covered by side face 14 of cover 2 when the pack is in a closed position.

An aperture A2 is formed in the surface define by the front face 25 and the top face 24 in order to provide access to the cigarettes inside the pack. Other materials, such as removable metallic wrappers, can also be used to further cover the cigarettes.

The surface defined by the front face 25 and top face 24 is part of second front panel 32 and second top panel 35 (see Figure 6), beneath which is a surface defined by first front panel 30 and first top panel 34, which comprises an aperture A1 of slightly smaller dimensions to the aperture found in the front face 25 and top face 24. The difference in the dimensions of aperture A1 and aperture A2 allows the front face 71 of the second front panel 30 and the top face 70 of the second top panel 34 to be seen when the cover 2 of the pack 10 is open, thereby producing the impression that the pack is double walled.

Figure 4 also shows linking element 28 and linking element 29 which are connected to both the cover 2 and the inner pack 1 in order to bias the relative arrangement of cover 2 and inner pack 1 in a first, semi-open position or in a fully closed position, as described in detail below. The linking elements are made of the same material as the rest of the pack and, as will be described below, form part of the cover blank 3.

Figure 5 shows a top view with hidden detail of the hinged pack of Figure 1, the pack being in the first position. One side of linking element 28 is connected to the inner front face 27 of the pack. The other side of linking element 28 is connected to linking element 29. A tab 29a is connected to linking element 29 and fixed to the left-hand side bevel 72. The tab 29a can be of any suitable shape but will preferably be of the same dimensions as left-hand side bevel 72.

Now, with reference to Figures 4 and 5, the operation of the hinged pack 10 of the first embodiment of the present invention will now be described. When the pack 10 is in a fully open position, as shown in figure 4, linking element 28 and linking element 29 extend from front inner face 27 of the cover 2 to the front left-hand side bevel 72 of the inner pack 1.

Then, when pressure is exerted in such a way as to bring the cover 2 and the inner pack 1 together, the front cover swings around the hinge axis H which puts pressure on linking elements 28 and 29 in such a way that they bend, until the cover 2 reaches the first position, as shown in Figure 5. In this position, the inner pack 1 and the cover 2 are in a balanced position, where any clockwise rotation of the cover 2 with respect to the inner pack 1, will put pressure on both linking elements 28 and 29, causing them to bend and bias the pack 10 towards the first position; whereas any further counter-clockwise rotation of the cover 2 with respect to the pack 1 will put pressure on linking element 28, causing it to bend and bias the pack 10 towards the first position. If however continued pressure is exerted in order to bend linking element 28 beyond a certain point, the receding of tab 29a into the inner corner of the front bevelled edge 18 will decrease the pressure on linking element 28. This decrease in the force applied to linking element 28 will result in a biasing of the pack 10 in a closed position.

Accordingly, the linking mechanism of a pack in accordance with the present invention will result in the pack being biased towards not only the closed position, but also to a semi-open position. Therefore, when the pack is closed, it is done so in two distinct stages. This resistive closing action further serves to give the impression to the user that the pack is of superior quality.

Figure 6 represents an inner pack blank 3 in accordance with the present invention. As can be seen, the blank comprises a plurality of panels separated

by fold lines (i.e. broken lines). The blank 3 includes rear panel 31, as well as first front panel 30 and first top panel 34 having an aperture A1, and second front panel 32 and second top panel 35 having an aperture A2.

First front panel 30 is connected to a first top panel 34, which itself is connected to a first side of rear panel 31. The other side of rear panel 31 is connected to bottom panel 33, which itself is connected to a first side of second front panel 32, the other side of which is connected to second top panel 35. Bottom panel 33, as well as first and second top panels 34, 35, are shaped as elongated octagons.

Rectangular bevel panels 37 are adjacently disposed on either side of rear panel 31. Once folded, bevel panels 37 will form both rear bevelled edges of the inner pack 1. As shown in Figure 2 and Figure 3, of these rear bevelled edges, only bevelled edge 16 is visible when the pack is constructed, as the other rear bevelled edge will be covered by panel 55 (shown in Figure 7). Rectangular inner side panels 40 are adjacently disposed on the outer edge of bevel panels 37. Upper and lower folding tabs 42 and 41, respectively, are adjacently disposed on the top and bottom end of each side panel 40.

Rectangular bevelled panels 36 are adjacently disposed on either side of second front panel 32. Once folded, bevel panels 36 will form first front bevelled edge 23 (see Figure 4) of the inner pack 1 and second front bevelled edge 72 (not shown), which will be fixed to tab 29a.

Rectangular outer side panels 39 and 38 are adjacently disposed on the outer edge of bevel panel 36. Outer side panel 38 comprises a recess 38a. When the blank is folded, the outer side panels 38 and 39 are placed over the inner side panels 40 and fixed thereto.

Now, with reference to Figure 6, the method of folding the blank will now be described. First front panel 30 is inwardly folded at a right angle with respect to first top panel 34 along the folding line. Then, first top panel 34 is inwardly folded at a right angle along the folding line with respect to rear panel 31. Once this is done, upper and lower folding tabs 41 and 42 are inwardly folded at right angles along their respective folding lines.

Then, panels 37 and 40 are inwardly folded until edge 42a is flush with edge 34a; edge 40a is flush with edge 34b; edge 37a is flush with edge 34c;

2010272531 01 Oct 2014

edge 37b is flush with edge 33a; edge 40b is flush with edge 33b and edge 41a is flush with edge 33c. Tabs 41 and 24 are preferably fixed to bottom panel 33 and first top panel 34, respectively.

Finally, second front panel 32 is folded inwardly in order to cover the first front panel 30 and outer side panels 38 and 39 are fixed to inner side panels 40.

In a pack in accordance with embodiments of the present invention, the grain of the cardboard or other material used to make the inner pack blank runs in the longitudinal direction of the blank 3.

Figure 7 represents the cover blank 4 of the pack in accordance with the present invention. As can be seen, the blank comprises a plurality of panels separated by fold lines. Tab 64 is formed on one side of back panel 43. When the pack is constructed, back panel 43 is fixed to the rear of the inner pack 1. Accordingly, the far side of back panel 43 will be rear face 20, shown in Figure 3.

Bevel panel 55 is adjacently disposed on the other side of back panel 43. Side panel 54 is adjacently disposed between bevel panel 55 and bevel panel 54. Side tabs 56 are adjacently disposed on the right and left of side panel 54. Side tabs 63 are adjacently disposed on the right and left of side bevel panel 53. Front panel 44 is adjacently disposed between bevel panel 53 and outer bevel panel 52. On the right and left sides of front panel 44, inner and outer bottom and top panels 59 and 57, respectively, are adjacently disposed.

Side tabs 62 are disposed on the right and left sides of outer bevel panel 52. Side tabs 59 are disposed on the right and the left sides of outer side panel 51, outer side panel 51 being disposed between outer bevel panel 52 and inner side panel 50. Inner side panel 50 is positioned between outer side panel 51 and inner bevel panel 49, which itself is disposed between inner side panel 50 and inner front panel 45.

Inner side panel 50 and inner side panel 51 comprise an octagonal aperture in which tabs 60 and 61a and 61b protrude. On the far end of inner front panel 45 are formed linking panel 46 and linking panel 47, as well as tab 48. In use, linking panel 46 becomes linking element 28, linking panel 47 becomes liklng element 29 and tab 48 becomes tab 29a.

Now, with reference to Figure 7, the method of folding the cover blank 4 will now be described.

2010272531 01 Oct 2014

First, tabs 61a, 61b and 60 are folded back in such a way that tabs 60 lie flat on outer side panel 51, tab 61a lies flat on outer bevel panel 52 and tab 61b lies flat on outer side panel 51. These tabs are preferably fixed to their respective panels.

Then, the bottom half of the blank 4 is folded inwardly such that tabs 56 are laid upon outer top and bottom panels 57. Then, inner top panels 58 are folded over outer top panels 57. In this way, edge 55a is flush with edges 56a, 57a and 58d; edge 53a is flush with edges 57d and 58a; edge 52a is flush with 49a, 57c and 58b; edge 50a is flush with edge 51a and edge 59a is flush with edge 57b and 58c.

In a pack in accordance with embodiments of the present invention, the grain of the cardboard or other material used to make the cover blank runs in the longitudinal direction of the blank 4.

Once the cover blank 4 and inner pack blank 3 are folded into their respective three-dimensional shapes, they are assembled into pack 10. In order to do this, panel 48 of the cover blank 7 is fixed to bevel panel 37 located on the right hand side of rear panel 31, as shown in Figure 6. Also, back panel 43 is fixed to rear panel 31 and tab 64 is fixed to bevel panel 37 located on the left hand side of rear panel 31, which bevel panel 37 comprises bevelled edge 16.

Figure 8 is a front view of a second embodiment of the hinged pack 10' in accordance with the present invention. As can be seen from Figure 8, the cover 2' of the hinged pack comprises a front face 11', a top face 12' and a bottom face 13' having the same dimensions as the top face 12'. Also, the cover 2' includes side face 14' and side face 15', as well as bevelled edge 18', positioned between side face 15' and front face 11', and bevelled edge 17', positioned between front face 11' and side face 14'. The hinge axis H' is hidden from view on the opposite side of the pack.

Figure 9 is a perspective view of the second embodiment of the hinged pack 10' in accordance with the present invention. The hinged pack 10' of Figure 9 is shown in a closed position. The hinged pack 10' includes a cover 2' having a front face 11', a top face 12', a side face 14' and bevelled edge 17' positioned between the side face 14' and front face 11'. Side face 14' also includes an

aperture through which the side face 22' of the inner pack 1' can be seen. The hinge axis H' is hidden from view on the opposite side of the pack.

Figure 10 is a rear view of the second embodiment of the hinged pack 10' in accordance with the present invention. The hinged pack 10' of Figure 10 is shown in a closed position. The cover 2' further includes rear face 20', rear bevelled edge 19', and hinge axis H', which is defined by the edge formed between side face 15' and bevelled edge 19'. Figure 10 also shows the bevelled edge 16' of the inner pack 1'.

In the embodiment shown in Figure 10, the rear face 20' of cover 2' is substantially identical in dimensions to the rear face (not shown) of the inner pack 1', though in other embodiments these elements may be of different dimensions. The rear face 20' of the cover 2' defines one of two sides of the rear wall of cover 2', the other side of which (not shown) is fixed to the rear face (not shown) of the inner pack 1'. The lip 21', which is part of the cover 2', is also fixed to the bevelled edge 16' of the inner pack 1'.

Figure 11 is a perspective view of hinged pack 10' in accordance with the present invention. Figure 11 shows the pack 10' when the cover 2' is pulled away from the inner pack 1' by relative rotation of part of the cover 2' and the inner pack 1', around the hinge axis H'. The cover 2' includes an inner front face 27', as well as an inner bottom face 26' and an inner top face (not shown). The inner pack 1' also comprises front face 25', top face 24', a front right-hand side bevel 23', a front left-hand side bevel 72' (not shown in Figure 11) and side face 22', which is partially covered by side face 14' of cover 2' when the pack is in a closed position.

In the pack of the second embodiment, aperture A2', which is slightly larger in dimension than aperture A1' is covered by a removable anti-tampering tab. Other materials, such as removable metallic wrappers, can also be used to further cover the cigarettes.

The surface defined by the front face 25' and top face 24' is part of second front panel 32' and second top panel 35' (see Figure 13), beneath which is a surface defined by first front panel 30' and first top panel 34', which comprises an aperture A1 of slightly smaller dimensions to the aperture found in the front face 25' and top face 24' which, in the second embodiment of the

present invention is covered by a removable anti-tampering tab. The difference in the dimensions of aperture A1' and aperture A2' allows the front face 71' of the second front panel 30' and the top face 70' of the second top panel 34' to be seen when the cover 2' of the pack 10' is open and the anti-tampering tab is removed, thereby producing the impression that the pack is double walled.

Figure 11 also shows linking element 28' and linking element 29' which are connected to both the cover 2' and the inner pack 1' in order to bias the relative arrangement of cover 2' and inner pack 1' in a first, semi-open position or in a fully closed position, as described in detail below. The linking elements are made of the same material as the rest of the pack and, as will be described below, form part of the cover blank 3'.

Figure 12 shows a top view with hidden detail of the hinged pack of Figure 8, the pack being in the first position. One side of linking element 28' is connected to the inner front face 27' of the pack. The other side of linking element 28' is connected to linking element 29'. A tab 29a' is connected to linking element 29' and fixed to the left-hand side bevel 72'. The tab 29a' can be of any suitable shape but will preferably be of the same dimensions as left-hand side bevel 72'.

Now, with reference to Figures 11 and 12, the operation of the hinged pack 10' of the second embodiment of the present invention will now be described. When the pack 10' is in a fully open position, as shown in figure 11, linking element 28' and linking element 29' extend from front inner face 27' of the cover 2' to the front left-hand side bevel 72' of the inner pack 1'.

Then, when pressure is exerted in such a way as to bring the cover 2' and the inner pack 1' together, the front cover swings around the hinge axis H' which puts pressure on linking elements 28' and 29' in such a way that they bend, until the cover 2' reaches the first position, as shown in Figure 12. In this position, the inner pack 1' and the cover 2' are in a balanced position, where any clockwise rotation of the cover 2' with respect to the inner pack 1', will put pressure on both linking elements 28' and 29', causing them to bend and bias the pack 10' towards the first position; whereas any further counter-clockwise rotation of the cover 2' with respect to the pack 1' will put pressure on linking element 28', causing it to bend and bias the pack 10' towards the first position. If

however continued pressure is exerted in order to bend linking element 28' beyond a certain point, the receding of tab 29a' into the inner corner of the front bevelled edge 18' will decrease the pressure on linking element 28'. This decrease in the force applied to linking element 28' will result in a biasing of the pack 10' in a closed position.

Accordingly, the linking mechanism of a pack in accordance with the present invention will result in the pack being biased towards not only the closed position, but also to a semi-open position. Therefore, when the pack is closed, it is done so in two distinct stages. This resistive closing action further serves to give the impression to the user that the pack is of superior quality.

Figure 13 represents an inner pack blank 3' in accordance with the present invention. As can be seen, the blank comprises a plurality of panels separated by fold lines (i.e. broken lines). The blank 3' includes rear panel 31', as well as first front panel 30' and first top panel 34' having an aperture A1', and second front panel 32' and second top panel 35' having an aperture A2' which is covered by anti-tampering tab T.

First front panel 30' is connected to a first top panel 34', which itself is connected to a first side of rear panel 31'. The other side of rear panel 31' is connected to bottom panel 33', which itself is connected to a first side of second front panel 32', the other side of which is connected to second top panel 35'. Bottom panel 33', as well as first and second top panels 34', 35', are shaped as elongated octagons.

Rectangular bevel panels 37' are adjacently disposed on either side of rear panel 31'. Once folded, bevel panels 37' will form both rear bevelled edges of the inner pack 1'. As shown in Figure 2' and Figure 3', of these rear bevelled edges, only bevelled edge 16' is visible when the pack is constructed, as the other rear bevelled edge will be covered by panel 55' (shown in Figure 14). Rectangular inner side panels 40' are adjacently disposed on the outer edge of bevel panels 37'. Upper and lower folding tabs 42' and 41', respectively, are adjacently disposed on the top and bottom end of each side panel 40'.

Rectangular bevelled panels 36' are adjacently disposed on either side of second front panel 32'. Once folded, bevel panels 36' will form first front bevelled

2010272531 01 Oct 2014

edge 23' (see Figure 13) of the inner pack 1' and second front bevelled edge 72' (not shown), which will be fixed to tab 29a'.

Rectangular outer side panels 39' and 38' are adjacently disposed on the outer edge of bevel panel 36'. Outer side panel 38' comprises a recess 38a'. When the blank is folded, the outer side panels 38' and 39' are placed over the inner side panels 40' and fixed thereto.

Now, with reference to Figure 13, the method of folding the blank will now be described. First front panel 30' is inwardly folded at a right angle with respect to first top panel 34' along the folding line. Then, first top panel 34' is inwardly folded at a right angle along the folding line with respect to rear panel 31'. Once this is done, upper and lower folding tabs 41' and 42' are inwardly folded at right angles along their respective folding lines.

Then, panels 37' and 40' are inwardly folded until edge 42a' is flush with edge 34a'; edge 40a' is flush with edge 34b'; edge 37a' is flush with edge 34c'; edge 37b' is flush with edge 33a'; edge 40b' is flush with edge 33b' and edge 41a' is flush with edge 33c'. Tabs 41' and 24' are preferably fixed to bottom panel 33' and first top panel 34', respectively.

Finally, second front panel 32' is folded inwardly in order to cover the first front panel 30' and outer side panels 38' and 39' are fixed to inner side panels 40.

In a pack in accordance with embodiments of the present invention, the grain of the cardboard or other material used to make the inner pack blank runs in the longitudinal direction of the blank 3'.

Figure 14 represents the cover blank 4' of the pack in accordance with the present invention. As can be seen, the blank comprises a plurality of panels separated by fold lines. Tab 64' is formed on one side of back panel 43'. When the pack is constructed, back panel 43' is fixed to the rear of the inner pack 1'. Accordingly, the far side of back panel 43' will be rear face 20', shown in Figure 3'.

Bevel panel 55' is adjacently disposed on the other side of back panel 43'. Side panel 54' is adjacently disposed between bevel panel 55' and bevel panel 54'. Side tabs 56' are adjacently disposed on the right and left of side panel 54'. Side tabs 63' are adjacently disposed on the right and left of side

2010272531 01 Oct 2014

bevel panel 53'. Front panel 44' is adjacently disposed between bevel panel 53' and outer bevel panel 52'. On the right and left sides of front panel 44', inner and outer bottom and top panels 59' and 57', respectively, are adjacently disposed.

Side tabs 62' are disposed on the right and left sides of outer bevel panel 52'. Side tabs 59' are disposed on the right and the left sides of outer side panel 51', outer side panel 51' being disposed between outer bevel panel 52' and inner side panel 50'. Inner side panel 50' is positioned between outer side panel 51' and inner bevel panel 49', which itself is disposed between inner side panel 50' and inner front panel 45'.

Inner side panel 50' and inner side panel 51' comprise an octagonal aperture in which tabs 60' and 61a' protrude. On the far end of inner front panel 45' are formed linking panel 46' and linking panel 47', as well as tab 48'. In use, linking panel 46' becomes linking element 28', linking panel 47' becomes liking element 29' and tab 48' becomes tab 29a'.

Now, with reference to Figure 14, the method of folding the cover blank 4' will now be described.

First, tabs 61a' and 60' are folded back in such a way that they both lie flat on outer side panel 51'. These tabs are preferably fixed to panel 51'.

Then, the bottom half of the blank 4' is folded inwardly such that tabs 56' are laid upon outer top and bottom panels 57'. Then, inner top panels 58' are folded over outer top panels 57'. In this way, edge 55a' is flush with edges 56a', 57a' and 58d'; edge 53a' is flush with edges 57d' and 58a'; edge 52a' is flush with 49a', 57c' and 58b'; edge 50a' is flush with edge 51a' and edge 59a' is flush with edge 57b' and 58c'.

In a pack in accordance with embodiments of the present invention, the grain of the cardboard or other material used to make the cover blank runs in the longitudinal direction of the blank 4'.

Once the cover blank 4' and inner pack blank 3' are folded into their respective three-dimensional shapes, they are assembled into pack 10'. In order to do this, panel 48' of the cover blank 7' is fixed to bevel panel 37' located on the right hand side of rear panel 31', as shown in Figure 13. Also, back panel 43' is fixed to rear panel 31' and tab 64' is fixed to bevel panel 37' located on the left hand side of rear panel 31', which bevel panel 37' comprises bevelled edge 16'.

2010272531 01 Oct 2014

Another feature of the second embodiment of the present invention is the presence of a locking mechanism which uses flap F, as well as a corresponding flap on the inner side of the cover 2' in order to bias the pack in a closed position.

Finally, a further feature of either the first or the second embodiment of the present invention is the presence of an anti-tampering tab T which, as can be seen from Figure 11, covers aperture A2' of the first and the second embodiment, respectively.

The invention has been described by way of non-limiting example only and many modifications and variations may be made thereto without departing from the spirit and scope of the invention.

Throughout this specification and the claims which follow, unless the context requires otherwise, the word "comprise", and variations such as "comprises" and "comprising", will be understood to imply the inclusion of a stated integer or step or group of integers or steps but not the exclusion of any other integer or step or group of integers or steps.

The reference in this specification to any prior publication (or information derived from it), or to any matter which is known, is not, and should not be taken as an acknowledgment or admission or any form of suggestion that that prior publication (or information derived from it) or known matter forms part of the common general knowledge in the field of endeavour to which this specification relates.

2010272531 01 Oct 2014

THE CLAIMS DEFINING THE INVENTION ARE AS FOLLOWS:

1. A hinge-cover cigarette pack comprising:

an inner box having a top face, a bottom face and longitudinal faces connecting the top face to the bottom face, one of the longitudinal faces being a front face;

a cover arranged to cover the entire surface of the front face when the pack is in a closed position, the cover being hingedly attached to a first longitudinal side face of the inner box; and

a linking element for attaching the cover to a second longitudinal side face of the inner box,

wherein the linking element is arranged to bias the relative position of the inner box to the cover in a first configuration, which first configuration is approximately half-way between a fully open configuration and a fully closed configuration.

2. The hinge-cover cigarette pack of claim 1, wherein:

the inner box is an octagonal parallelepiped having a top face, a bottom face, a front face, a rear face, two side face and four bevel faces; and

the cover being fixed to both the rear face of the inner box and, via the linking element, to one of the bevel faces of the inner box.

3. The hinge-cover cigarette pack of any one of the preceding claims, wherein: the cover, when closed, is essentially of the shape of an octagonal parallelepiped having a top wall, a bottom wall, a front wall, a rear wall, two side walls and three bevel walls;

the rear wall of the cover being arranged to be fixed to the rear face of the inner box.

4. The hinge-cover cigarette pack of any one of the preceding claims,

wherein the cover and the inner box are arranged such that, in a closed position:

the front wall of the cover is superimposed on the front face of the inner box;

2010272531 01 Oct 2014

the top wall of the cover covers the top face of the inner box;

the bottom wall of the cover covers the bottom face of the inner box; and

the side walls of the cover cover the side faces of the inner box.

5. The hinge-cover cigarette pack of any one of the preceding claims further comprising:

biasing means for biasing the pack in the closed position.

6. The hinge-cover cigarette pack of any one of the preceding claims, further comprising:

a tab fixed to one of the four bevel faces such that it is operable as a handle to facilitate the opening of the pack by a user.

7. A blank for producing the cover of any one of the preceding claims comprising:

a first top wall panel and a second top wall panel arranged to be folded and fixed upon one another;

a first bottom wall panel and a second bottom wall panel arranged to be folded and fixed upon one another;

a first front wall panel and a second front wall panel being arranged to be folded on top of each other in order to form the front wall of the cover;

a rear panel suitable to be attached to the rear face of the inner box; and a linking element attached to the second front wall and being suitable to attach the front wall to the inner box and further being arranged to bias the relative position of the inner box to the cover in a first configuration, which first configuration is approximately half-way between a fully open configuration and a fully closed configuration.

8. A hinge-cover cigarette pack substantially as hereinbefore described with reference to the accompanying drawings.

9. A blank for producing a hinge-cover cigarette pack, substantially as hereinbefore described with reference to the accompanying drawings.

Fig.1.

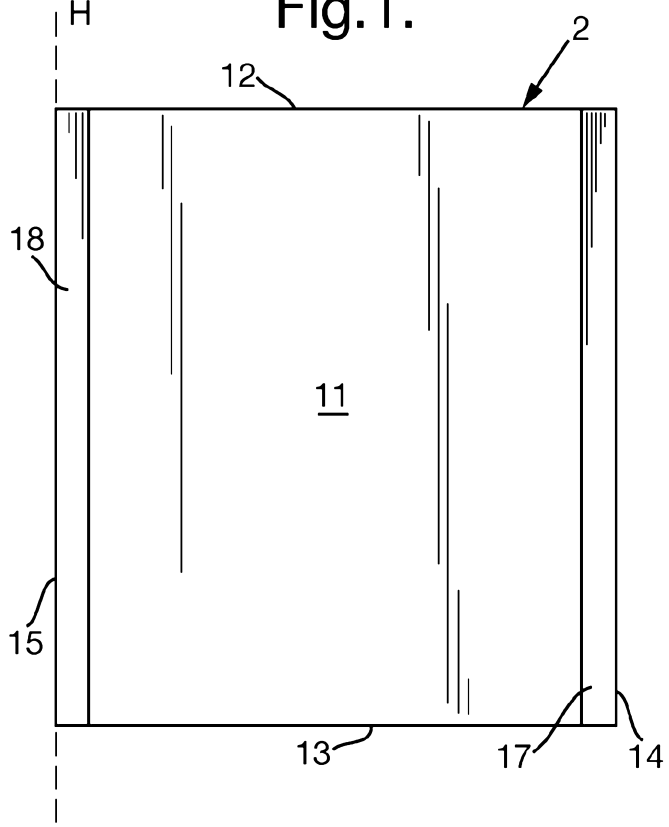

Fig.2.

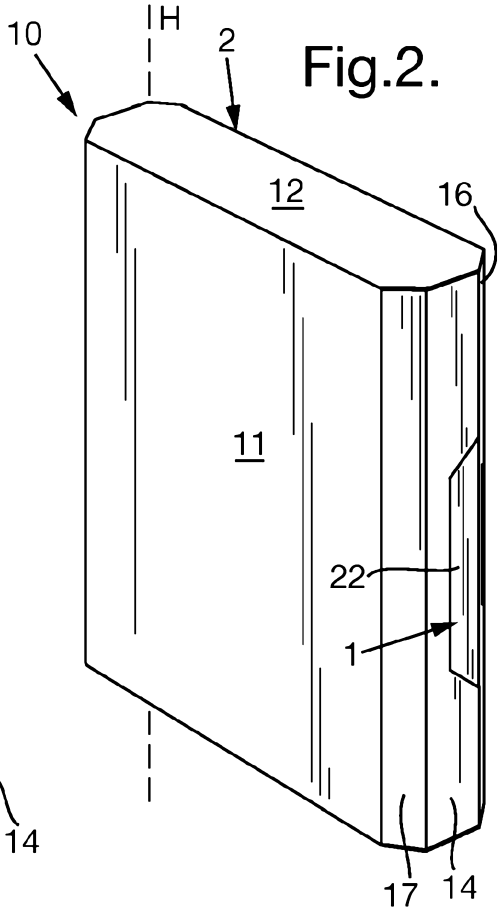

Fig.3.

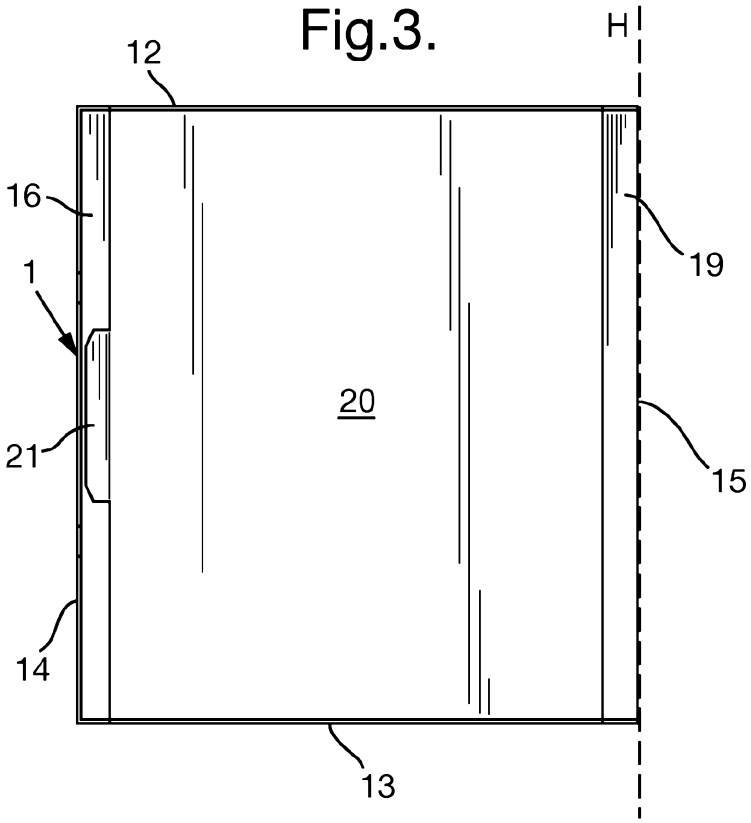

Fig.4.

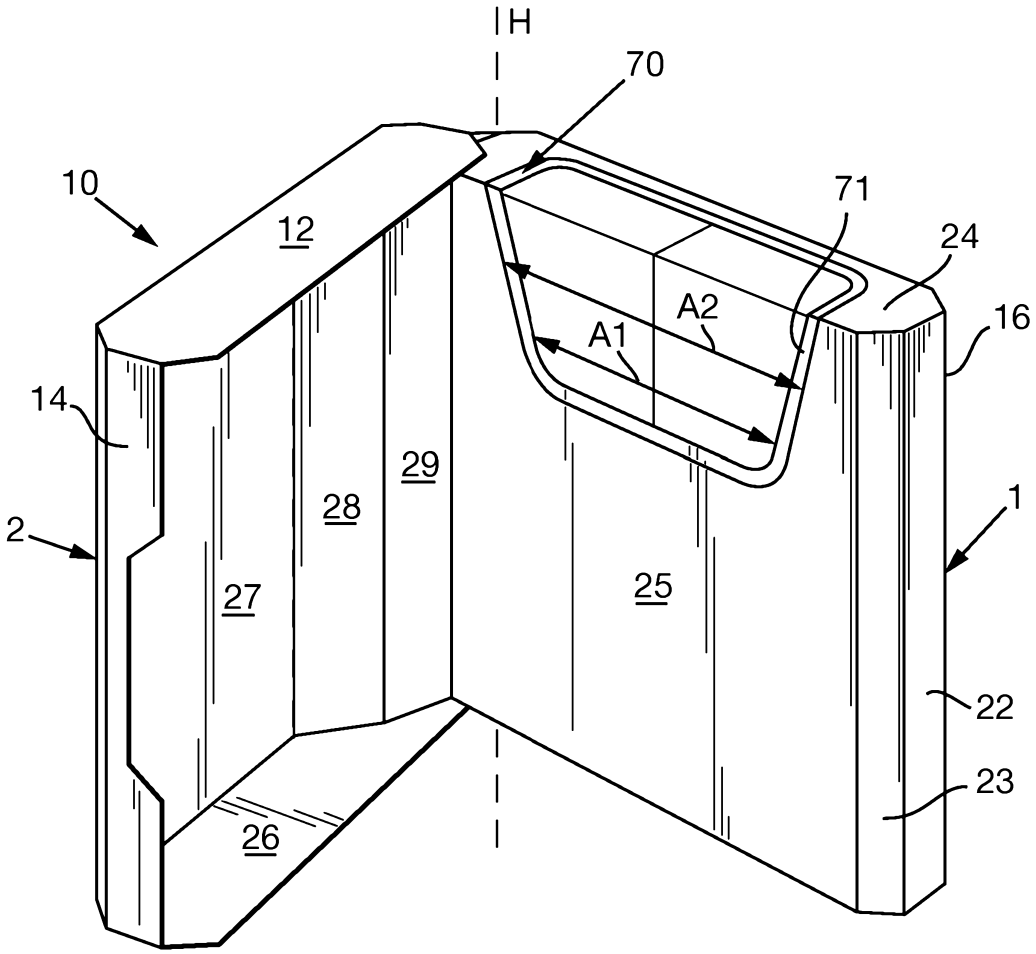

Fig.5.

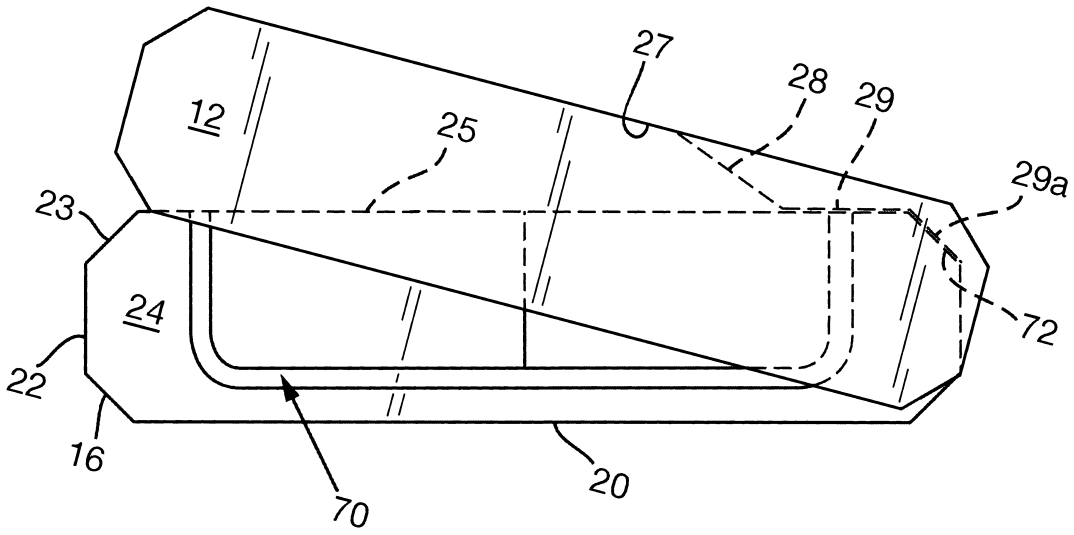

Fig.6.

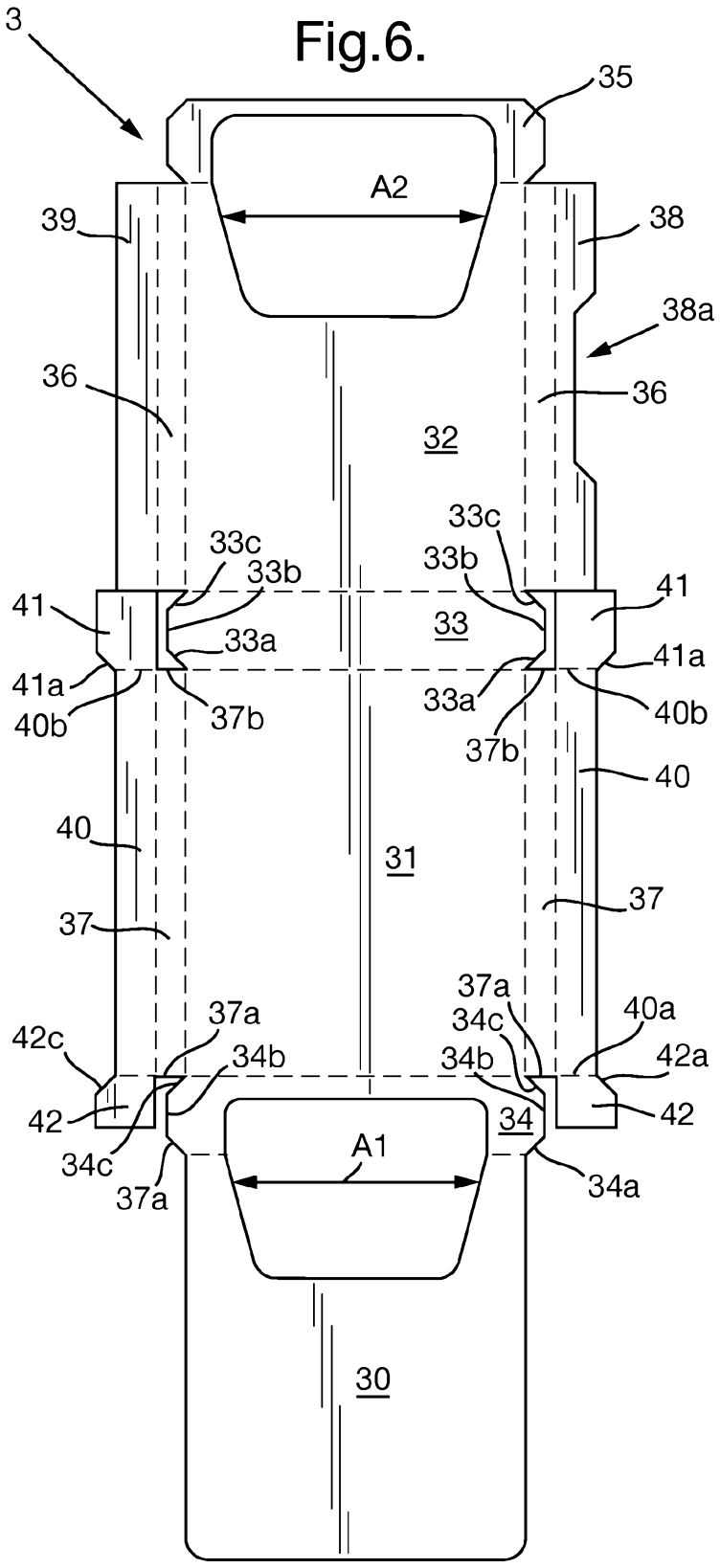
3
35
A2
39
38
38a
36
36
32
33c
33b
33c
33b
41
41
33
33a
41a
41a
40b
37b
33a
40b
37b
40
40
31
37
37
37a
37a
40a
42c
34b
34c
34b
42a
42
34
42
A1
34c
37a
34a
30

Fig.7.

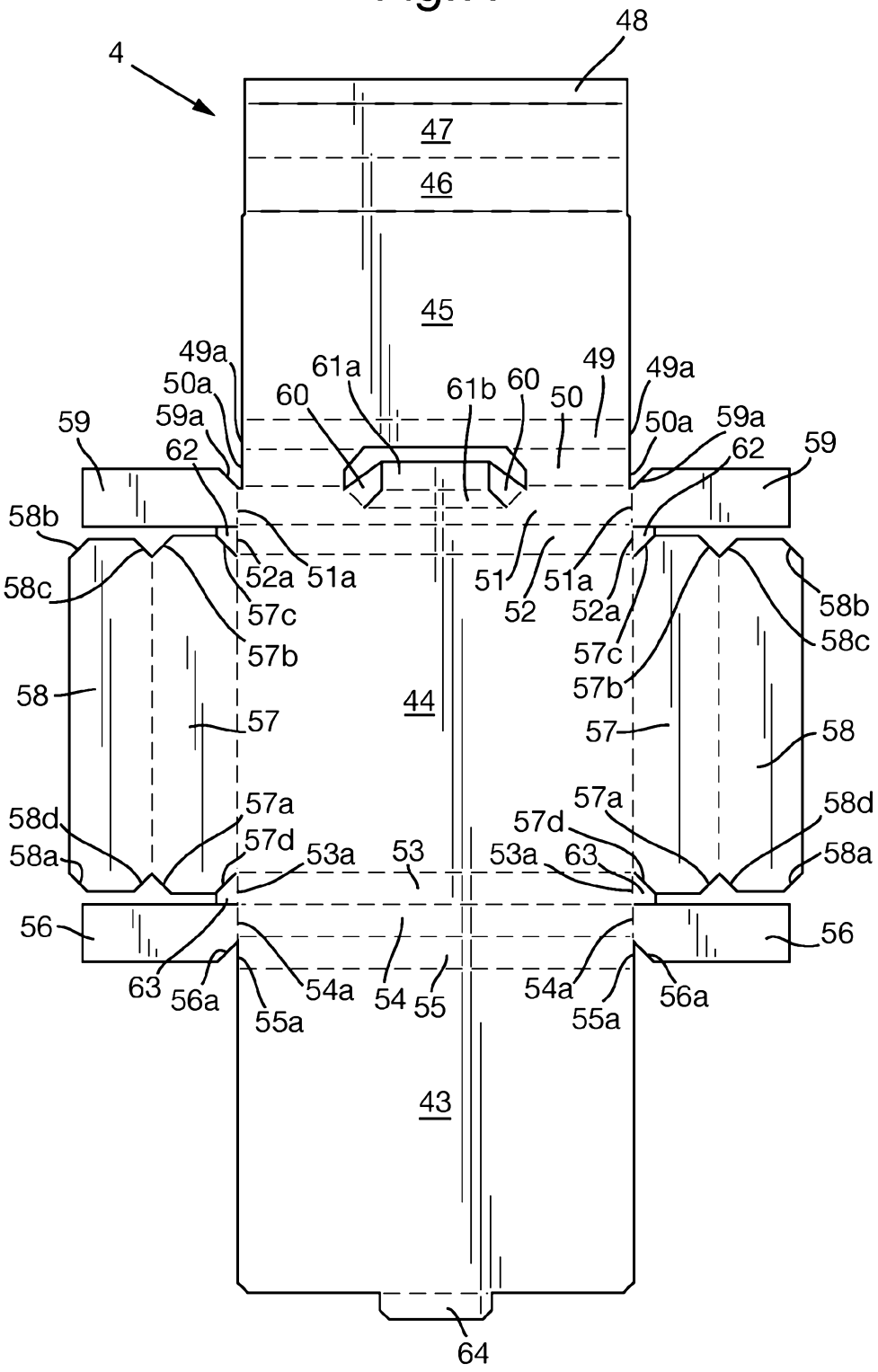
4
48
47
46
45
49a
50a
59a
62
59
61a
60
61b
60
50
49
49a
50a
59a
62
59
58b
58c
58
58d
58a
56
52a
51a
57c
57b
57
57a
57d
53a
53
63
56a
55a
54a
54
55
43
64
51
52
51a
52a
57c
57b
44
58b
58c
58
58d
58a
56

Fig.8.

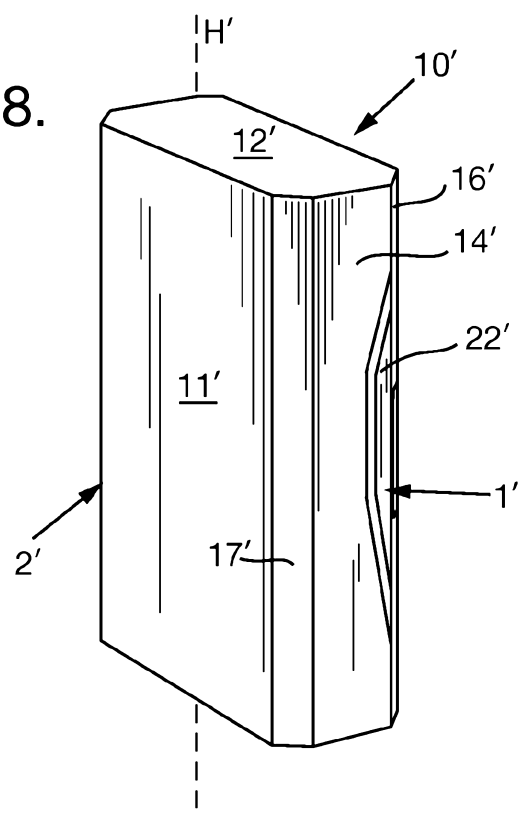

Fig.9.

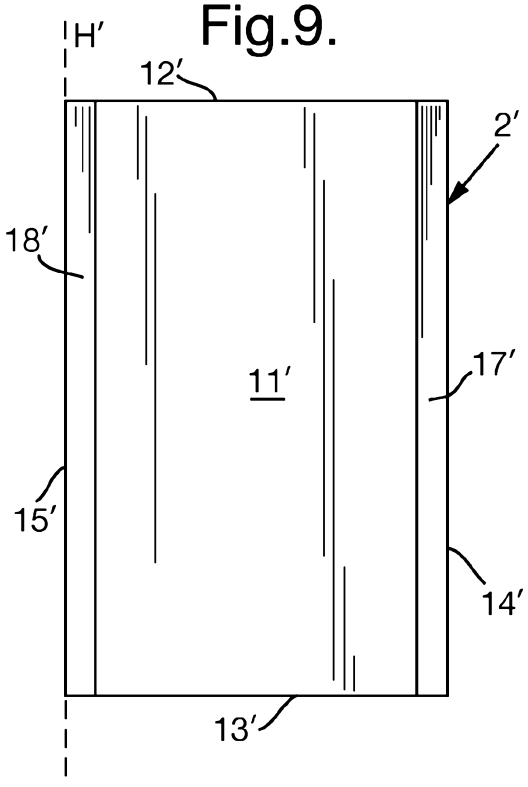

Fig.10.

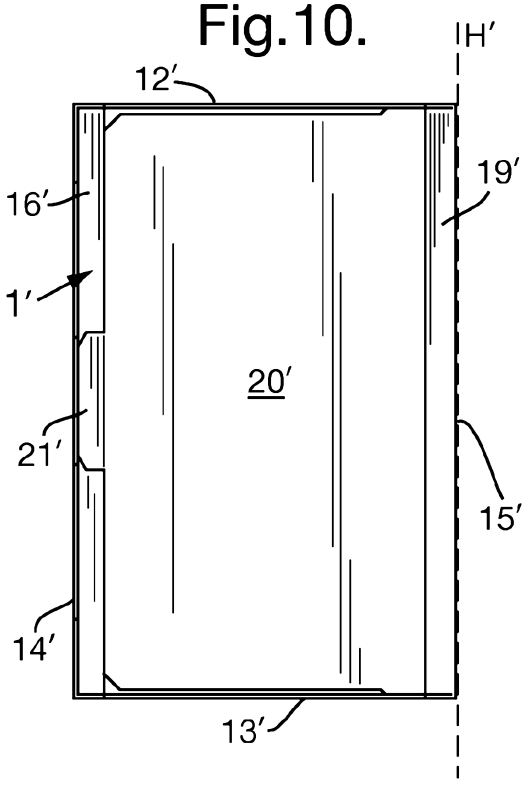

Fig.11.

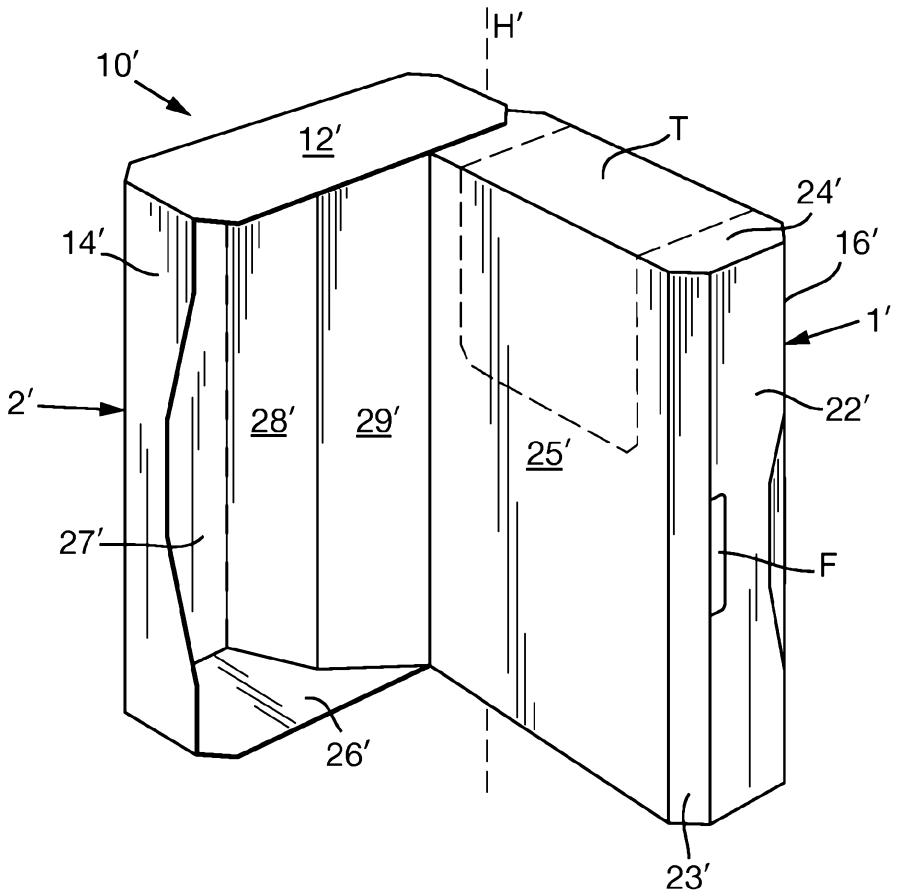

Fig.12.

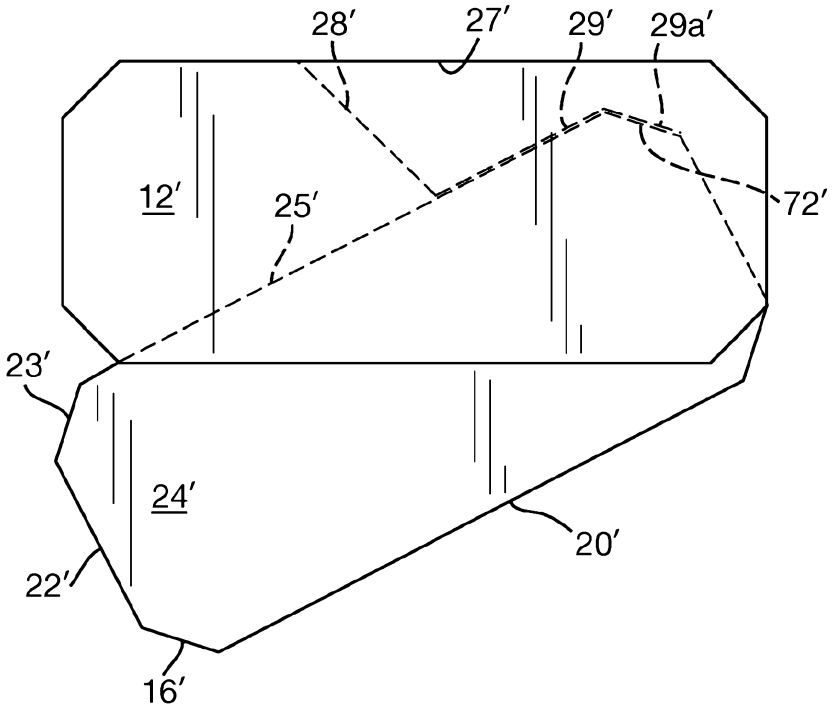

Fig.13.

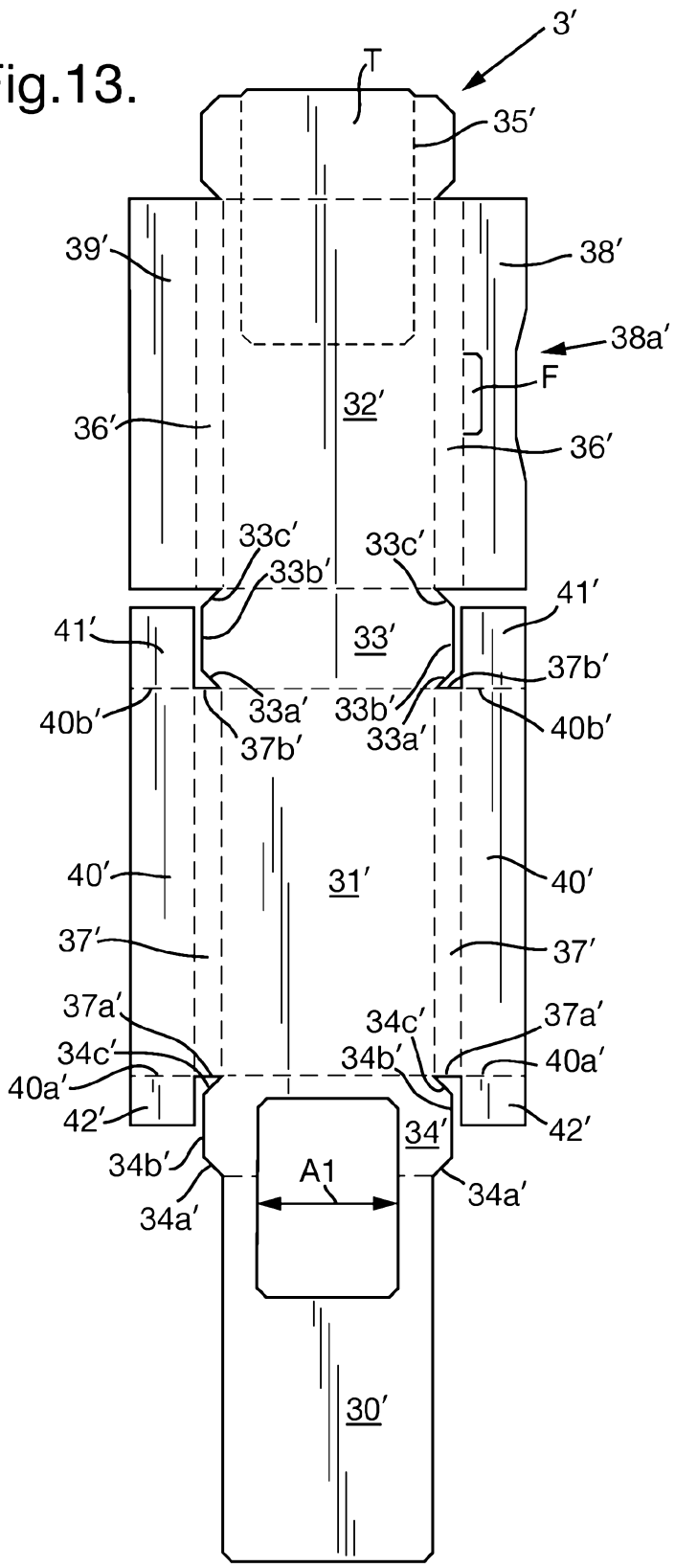
3′
T
35′
39′
38′
38a′
F
32′
36′
36′
33c′
33b′
33c′
41′
41′
33′
37b′
40b′
33a′
33b′
33a′
40b′
37b′
40′
31′
40′
37′
37′
37a′
34c′
34c′
37a′
34b′
40a′
40a′
42′
42′
34′
34b′
A1
34a′
34a′
30′

Fig.14.

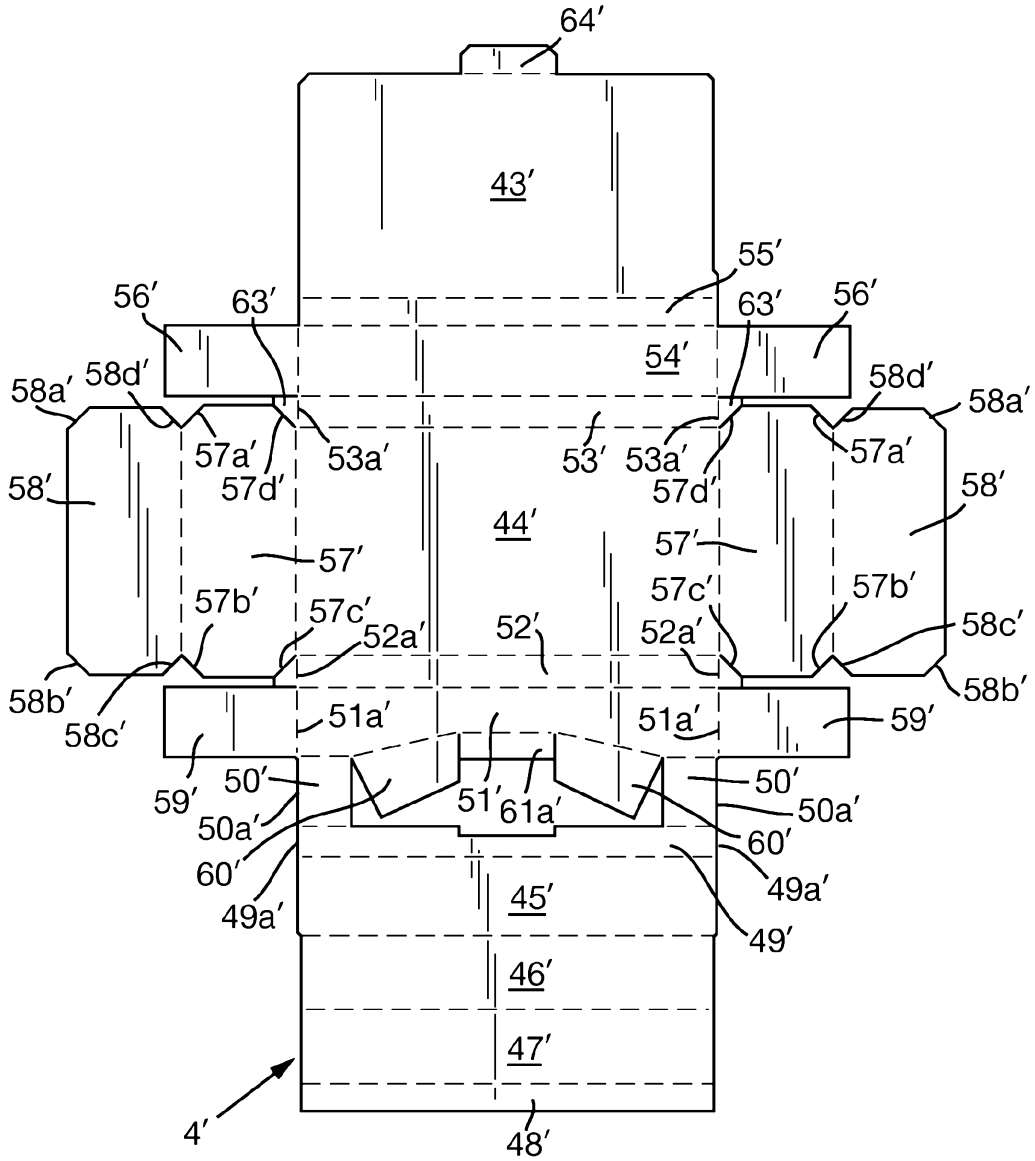
64′
43′
55′
56′
63′
63′
56′
54′
58a′
58d′
58d′
58a′
57a′
53a′
53′
53a′
57a′
57d′
57d′
58′
58′
44′
57′
57′
57b′
57c′
57c′
57b′
58c′
52a′
52′
52a′
58b′
58c′
51a′
51a′
59′
59′
50′
50′
51′
61a′
50a′
50a′
60′
60′
49a′
49a′
45′
49′
46′
47′
4′
48′