April 30, 1929. M. C. HOWARD 1,711,349

SPORT BAG

Filed May 17, 1928 2 Sheets-Sheet 1

Fig. 1.

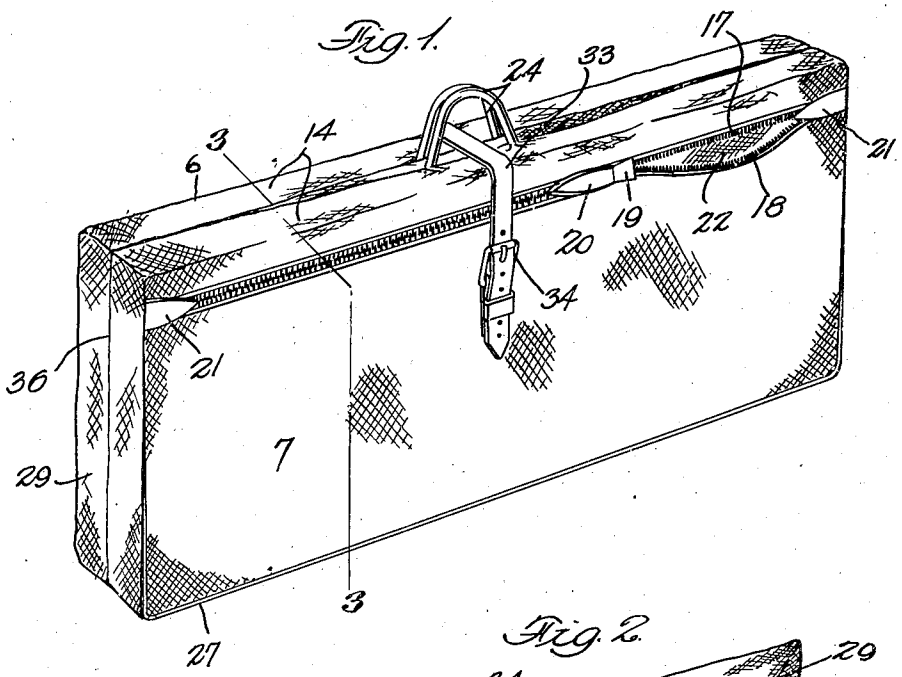

Fig. 2.

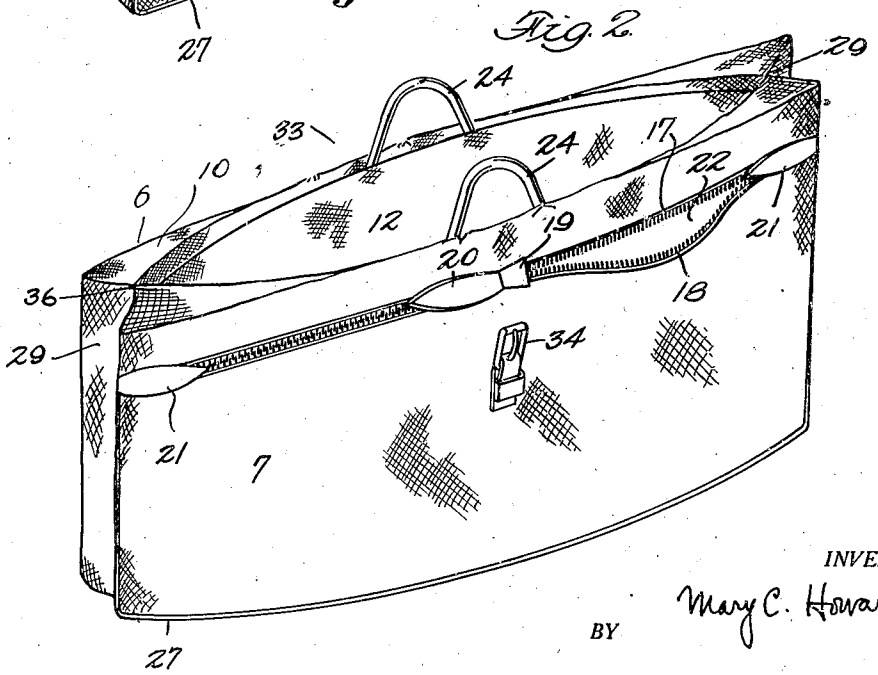

INVENTOR.

Mary C. Howard

BY

Martin T. Fisher ATTORNEY.

April 30, 1929. M. C. HOWARD 1,711,349

SPORT BAG

Filed May 17, 1928 2 Sheets-Sheet 2

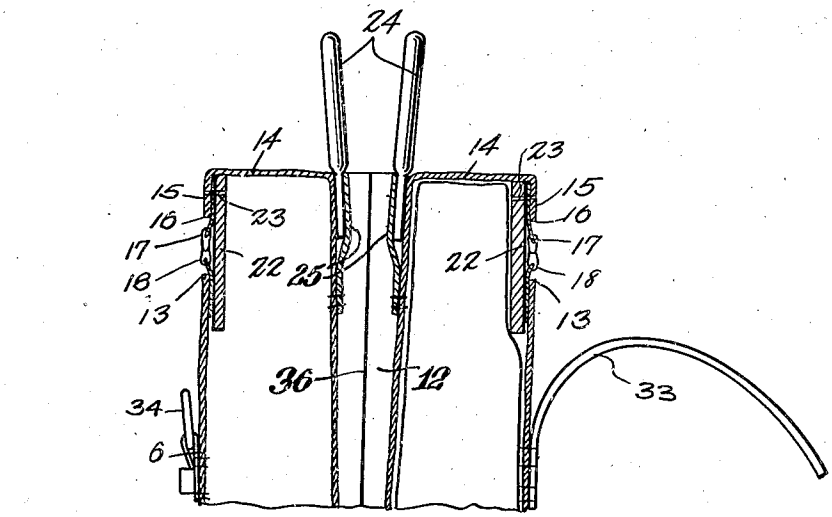

Fig. 3

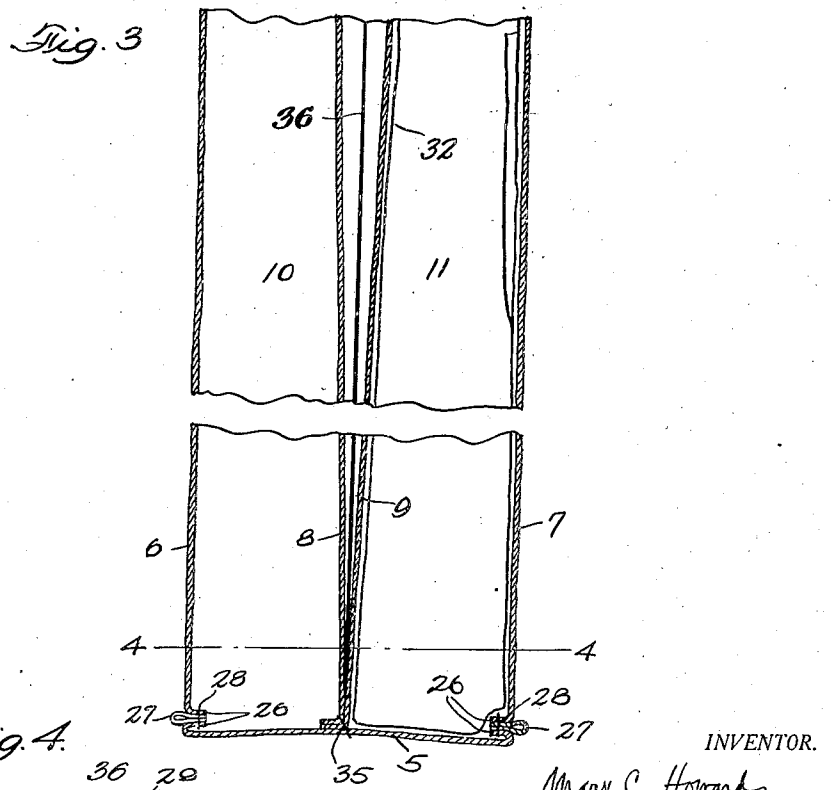

Fig. 4.

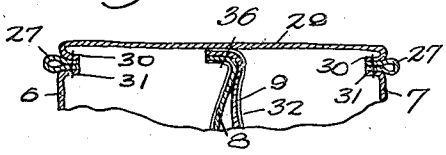

INVENTOR.

Mary C. Howard

BY

Martin T. Fisher ATTORNEY.

Patented Apr. 30, 1929. 1,711,349

UNITED STATES PATENT OFFICE.

MARY C. HOWARD, OF NEW YORK, N. Y.

SPORT BAG.

Application filed May 17, 1928. Serial No. 278,476.

This invention is a sport bag, primarily designed for carrying clothing, shoes, golf sticks, bathing suits, tennis rackets and the like, but, of course, its use is not limited to any particular articles. The bag is preferably made of flexible material, such as a heavy woven cloth, so that it will expand and contract according to the number of things carried. Being flexible, when empty, it can be rolled up into a small package; or if only partly filled, it can be partly rolled up or folded so as to take a minimum of space, a considerable advantage when travelling.

The bag comprises essentially two vertically disposed side walls which define between them a central compartment, which is preferably an open topped compartment. These two side walls are provided with cooperating handles, both of which are simultaneously grasped by the user for holding the central compartment closed.

Each side wall of the bag is itself double, being composed of two vertically disposed side walls which define between them a side compartment. The bag, therefore, comprises two side compartments, one formed by each pair of double side walls, and a central compartment. The side compartments are opened and closed by a slide fastener, sometimes known as hookless slide fasteners, these slide fasteners being preferably arranged on the outside walls of the bag. Thus one is enabled to gain access to any one of the three compartments in the bag without opening or disturbing the other two compartments. The central compartment is opened simply by drawing apart the two handles, and the side compartments are opened with the slide fasteners.

A strap or the like may extend transversely across the top of the bag and across the opening of each of the three compartments. This strap preferably passes through the two handles.

At the meeting edges of the bottom, side and end walls, the edges are bent inwardly; placed between these inwardly bent portions is a reenforcing member preferably U-shaped and preferably of leather or the like, the inwardly turned edges and the reenforcing member all being stitched together to give a joint which is very strong and durable. The bight of the U-shaped reenforcing member is on the outside of the bag and being of a contrasting color is distinctly ornamental, although its function is primarily a mechanical one.

A protecting strip of leather or the like is preferably located on the inside of the bag underlying the slide fastener, so as to prevent any of the articles in the bag from getting tangled up with the slide fastener. This leather strip also stiffens the bag slightly.

Further details of construction and operation will be apparent from the accompanying drawing, illustrating the preferred embodiment of the invention. While such a preferred embodiment will be described in considerable detail, it should be understood that the invention is not limited to such details but may be carried out in other ways.

In these drawings,

Figure 1 is a perspective view of the sport bag, with the central compartment closed.

Figure 2 is a perspective view showing the central compartment opened.

Figure 3 is a section on an enlarged scale on the line 3—3 of Figure 1.

Figure 4 is a section on the line 4—4 of Figure 3.

Referring now to the drawings, in which similar characters indicate similar parts, the bag comprises a bottom portion 5, outer side walls 6 and 7 and inner walls 8 and 9. These walls are ordinarily vertically disposed and substantially parallel. The two walls 6 and 8 form a double side wall defining a side compartment 10 and the other two side walls 7 and 9 form a double side wall defining between them a second side compartment 11. The side walls, more particularly the inner walls 8 and 9 define between them a central compartment 12. The outer side walls 6 and 7 terminate along the line 13. The central walls 8 and 9 at the top are bent outwardly horizontally as shown at 14 and then bent downwardly as at 15, terminating along the line 16. Secured to the respective edges 13 and 16 of the side walls are the double rows of fasteners 17 and 18 of a known type which cooperating with a slide 19 are engaged and disengaged in the usual way. The slide 19 is provided with a manipulating tab 20; at each end of the fasteners, secured to the bag, are tabs 21, which may be grasped to hold that end of the bag while the slide 19 is being moved back and forth. The tabs 20 and 21 are preferably of leather.

Positioned underneath the inside of the slide fasteners is a heavy longitudinally ex-

tending protecting strip 22 of leather or the like, which is secured to one of the walls, preferably to the inner walls 8 and 9 by the stitches 23. This protecting strip gives a desirable stiffness to the top edge of the bag which facilitates the operation of the slide fasteners and also keeps articles on the inside of the bag from becoming entangled with the slide fasteners.

Secured centrally of the bag and preferably attached to the top portions of the central walls 8 and 9 is a pair of handles 24, which are grasped simultaneously by the user when carrying the bag. If these handles are pulled apart, the central compartment 12 of the bag is thereby opened. A longitudinally extending protecting strip 25 is secured along the inner top edges of the walls 8 and 9, this strip strengthening the bag and overlying the base portions of the handles 24, thereby aiding their secure anchorage and improving the appearance of the bag.

The edges of the bottom wall 5 and the lower edges of the side walls 6 and 7 are bent inwardly, as shown at 26, Figure 3, and positioned between these inwardly bent edges is a U-shaped reenforcing member 27, preferably of leather or the like, the bight portion of which is on the outside of the bag. The inwardly turned edges 26 and the reenforcing member 27 are all held together securely by stitches 28.

The end walls 29 of the bag, see Figure 4, which may be integral extensions of the bottom 5, have inwardly bent edges 30 and the side walls 6 and 7 have inwardly bent edges 31; positioned between these inwardly bent edges is the reenforcing member 27, which is preferably simply a continuation of the reenforcement 27 running along the bottom edges of the bag. The reenforcement 27 in addition to giving a very durable seam, is usually of a color contrasting to the cloth of the bag and has a distinctly decorative effect.

The side compartments 10 and 11 may, if desired, be provided with a suitable lining, as indicated at 32.

A transversely extending strap 33 is provided which is secured to the outer side walls 6 and 7 below the slide fasteners. One end of the strap is secured permanently to the bag, while the other end is detachably secured thereto by a buckle 34. The strap extends across the openings of all three compartments and closes them in part.

The bottom edges of the inner walls 8 and 9 are stitched to the bottom 5, as indicated at 35; the ends of the inner walls 8 and 9, and the lining 32, are stitched to the end wall 29 along the line 36. The line of stitching 36 extends from the bottom of the bag substantially to the top thereof, and so the central compartment is closed at the ends even when it is open at the top. The line of stitching 36 gives the V-effect on the end wall 29, as shown in Figure 2, when the bag is open.

The walls of the bag are preferably made of a heavy durable cloth, without stiffening elements, although stiffening elements could be used if desired. But in the preferred form, no stiffening elements are used, so that the bag when empty can be rolled up. If only one end is full, the other end can be rolled up, so that it will occupy a minimum of space.

An important feature of the invention is that a three-compartment bag is provided, in which practically instantaneous access to any compartment can be had without opening either of the other two compartments.

It should be understood that the invention is not to be limited to the precise details here illustrated but may be carried out in other ways as expressed within the scope of the appended claims.

I claim as my invention:

1. A sport bag comprising two pairs of vertically disposed double walls, the double walls defining between them a central compartment, and each double wall itself forming a side compartment, the ends of the two adjacent inner walls being permanently secured at the ends of the bag along substantially vertical lines extending from the bottom of the bag substantially to the top thereof, for closing the ends of the central compartment, and slide fastening means for each double wall for opening and closing the side compartments, whereby a three compartment bag is formed, each compartment of which is accessible without opening either of the other two compartments.

2. A sport bag comprising two pairs of vertically disposed double walls, defining between them an open-topped central compartment, each double wall itself forming a side compartment, a handle carried by each double wall, the two handles being opposite each other so as to be grasped simultaneously, and slide fastening means for each double wall for opening and closing the side compartments, whereby a three compartment bag is formed, each compartment of which is accessible independently of the other two compartments.

3. A sport bag comprising two pairs of vertically disposed double walls, the double walls defining between them a central compartment, and each double wall itself forming a side compartment, and slide fastening means for each double wall for opening and closing the side compartments, whereby a three compartment bag is formed, each compartment of which is accessible without opening either of the other two compartments, the entire bag being constructed of flexible materials, whereby it may be rolled

up endways or sideways for shortening it or for packing it in a restricted space.

4. A sport bag comprising two pairs of vertically disposed double walls, defining between them an open-topped central compartment, each double wall itself forming a side compartment, a handle carried by each double wall, the two handles being opposite each other so as to be grasped simultaneously, and slide fastening means for each double wall for opening and closing the side compartments, whereby a three compartment bag is formed, each compartment of which is accessible independently of the other two compartments, the entire bag being constructed of flexible materials, whereby it may be rolled up endways or sideways for shortening it or for packing it in a restricted space.

5. A sport bag comprising a bottom wall, end walls, and four substantially parallel vertical walls, the ends of the inner walls being permanently secured to the end walls along vertical lines at the ends of the bag, which lines extend from the bottom of the bag substantially to the top thereof, a top wall secured to one outer wall and the adjacent inner wall, a second top wall secured to the other outer wall and the adjacent inner wall, whereby a three compartment bag is formed, and means for opening and closing the compartments between each outer wall and its adjacent inner wall, the entire bag being constructed of flexible materials, whereby it may be rolled up or shortened by bending it on itself and so may be packed in a restricted space.

6. A sport bag comprising a bottom wall, end walls, and four substantially parallel vertical walls, the ends of the inner walls being permanently secured to the end walls along vertical lines at the ends of the bag, which lines extend from the bottom of the bag substantially to the top thereof, a top wall secured to one outer wall and the adjacent inner wall, a second top wall secured to the other outer wall and the adjacent inner wall, whereby a three compartment bag is formed, and slide fastener means slidable longitudinally of the bag for opening and closing the compartments between each outer wall and its adjacent inner wall, the entire bag being constructed of flexible materials, whereby it may be rolled up or shortened by bending it on itself and so may be packed in a restricted space.

7. A sport bag comprising a bottom, end walls, two inner walls and two outer walls, said inner and outer walls being vertically disposed and substantially parallel, the ends of the inner walls being permanently secured to the end walls along vertical lines at the ends of the bag, which lines extend from the bottom of the bag substantially to the top thereof, the top portions of the two inner walls extending horizontally outwardly and then being bent downwardly to meet the upper edge of the corresponding outer wall, for defining side compartments, cooperating handles attached to the two inner walls near the tops thereof, and slide fasteners for securing together the meeting edges of the outer wall and its corresponding inner wall.

8. A sport bag comprising vertically disposed side walls, one of the side walls being wider than the other and having its top portion bent horizontally toward the other wall and then bent downwardly to bring its edge adjacent the upper edge of the other wall, a slide fastener slidable longitudinally of the bag, for securing the meeting edges of the walls together, and a relatively heavy, longitudinally extending protecting strip secured to one of the walls alongside the fastener elements and adapted to underlie the meeting edges when they are secured together.

9. A sport bag comprising a bottom and four vertically disposed side walls, defining a central compartment and two side compartments, slide fasteners for the side compartments, a pair of cooperating handles, one carried by each of the two central side walls, and a longitudinally extending reenforcing strip extending along the two inner walls, near the top, and overlying the lower ends of said handles.

10. A sport bag comprising two pairs of vertically disposed double walls, the double walls defining between them a central compartment and each double wall itself forming a side compartment, slide fastening means for each double wall for opening and closing the side compartments, whereby a three compartment bag is formed, each compartment of which is accessible without opening either of the other two compartments, a transversely extending strap extending from one side of the bag across its top to the other, said strap crossing each of the three compartments of the bag the entire bag being made of flexible materials so that it may be rolled up sideways or endways.

11. A sport bag comprising two pairs of vertically disposed double walls, defining between them an open-topped central compartment each double wall itself forming a side compartment, a handle carried by each double wall, the two handles being opposite each other so as to be grasped simultaneously, slide fastening means for each double wall for opening and closing the side compartments, whereby a three compartment bag is formed, each compartment of which is accessible independently of the other two compartments, and a transversely extending strap the ends of which are attached to the outer walls of the bag, below the slide fas-

teners, said strap crossing the openings for each of the three compartments of the bag.

12. A sport bag comprising a bottom, two inner walls and two outer walls, said inner and outer walls being vertically disposed and substantially parallel, the top portions of the two inner walls extending horizontally outwardly and then being bent downwardly to meet the upper edge of the corresponding outer wall, for defining side compartments, cooperating handles attached to the two inner walls near the tops thereof, slide fasteners for securing together the meeting edges of the outer wall and its corresponding inner wall, and a strap, the ends of which are attached to the outside walls below the slide fasteners, the strap crossing each of the three compartments of the bag.

In testimony whereof I hereunto affix my signature.

MARY C. HOWARD.