July 10, 1956 A. W. FRANKLIN 2,753,619

METHOD AND APPARATUS FOR STAMPING AND ADHERING CONDUCTIVE ELEMENTS TO NON-CONDUCTIVE BASES

Filed Oct. 23, 1952 3 Sheets-Sheet 1

Fig. 9.

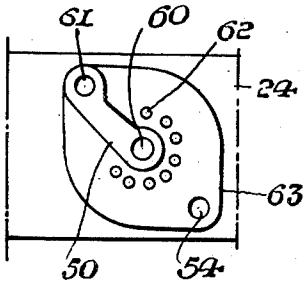

Fig. 1.

Fig. 2.

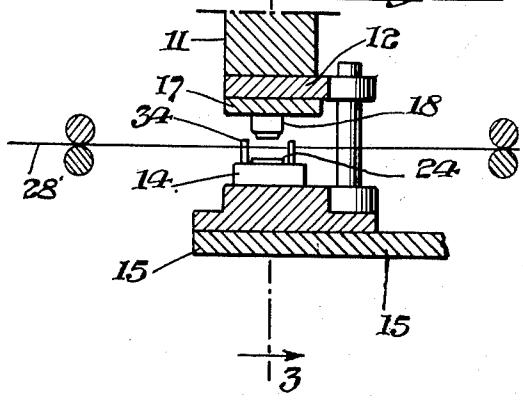

Fig. 10.

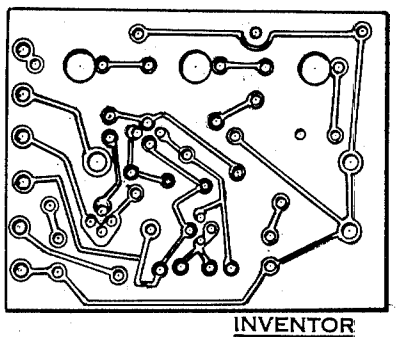

INVENTOR
Albert W. Franklin
BY Darby & Darby
ATTORNEYS.

July 10, 1956 A. W. FRANKLIN 2,753,619

METHOD AND APPARATUS FOR STAMPING AND ADHERING CONDUCTIVE ELEMENTS TO NON-CONDUCTIVE BASES

Filed Oct. 23, 1952 3 Sheets-Sheet 2

Fig. 3.

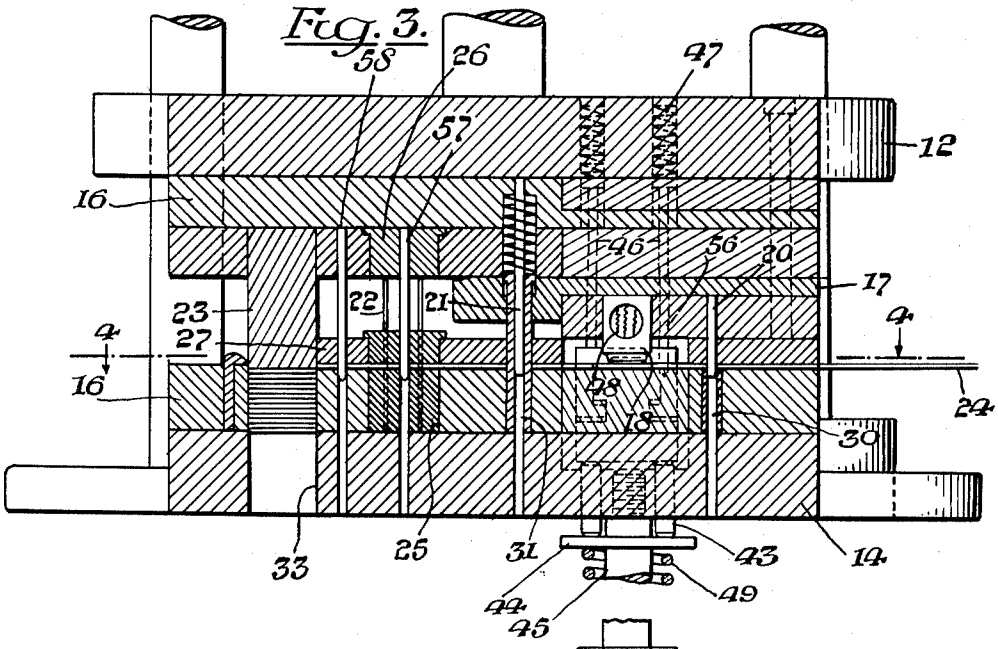

Fig. 4.

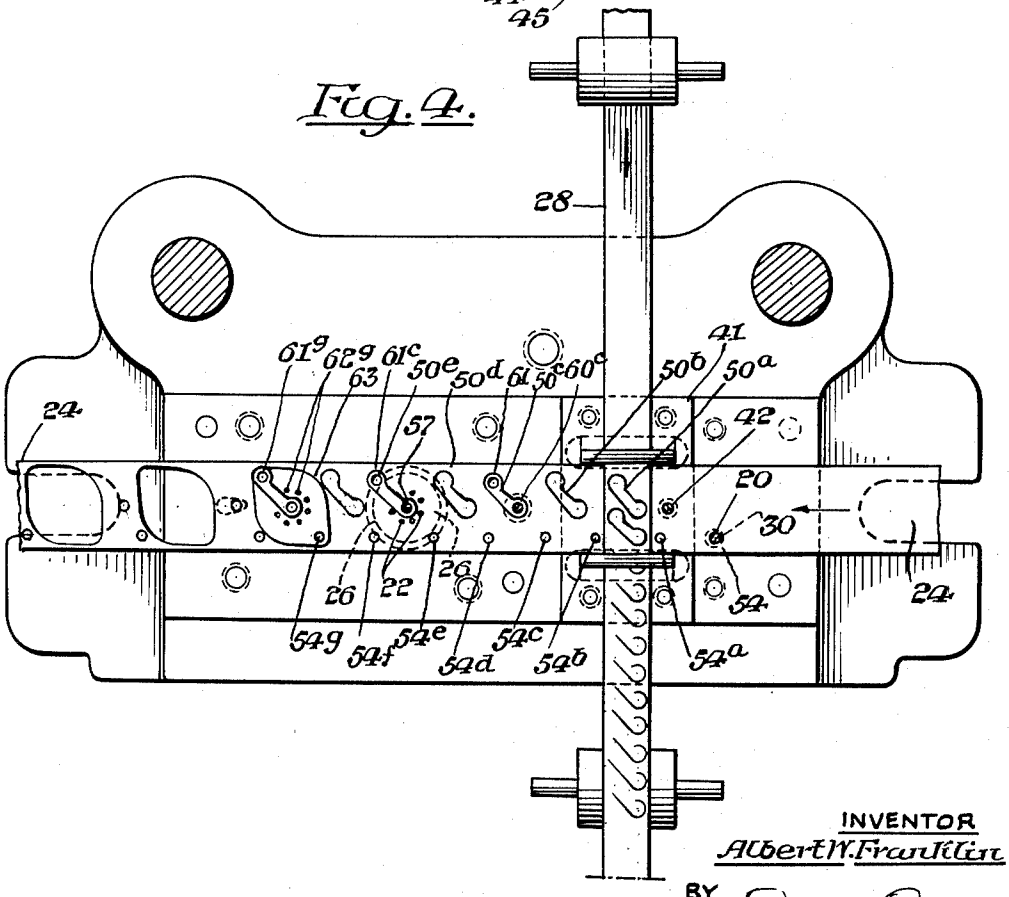

INVENTOR
Albert W. Franklin
BY Darby & Darby
ATTORNEYS.

July 10, 1956 A. W. FRANKLIN 2,753,619

METHOD AND APPARATUS FOR STAMPING AND ADHERING CONDUCTIVE ELEMENTS TO NON-CONDUCTIVE BASES

Filed Oct. 23, 1952 3 Sheets-Sheet 3

Fig. 5.

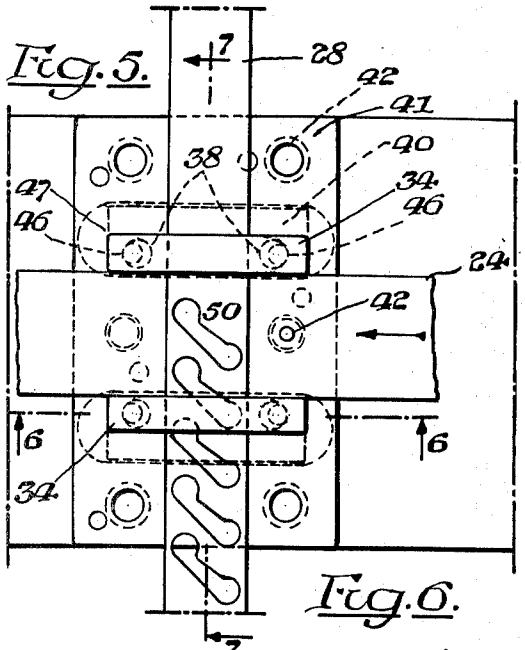

Fig. 8.

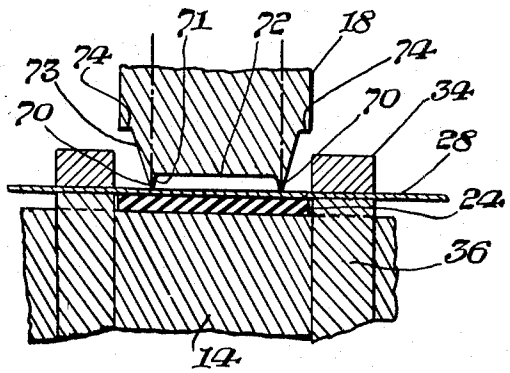

Fig. 7.

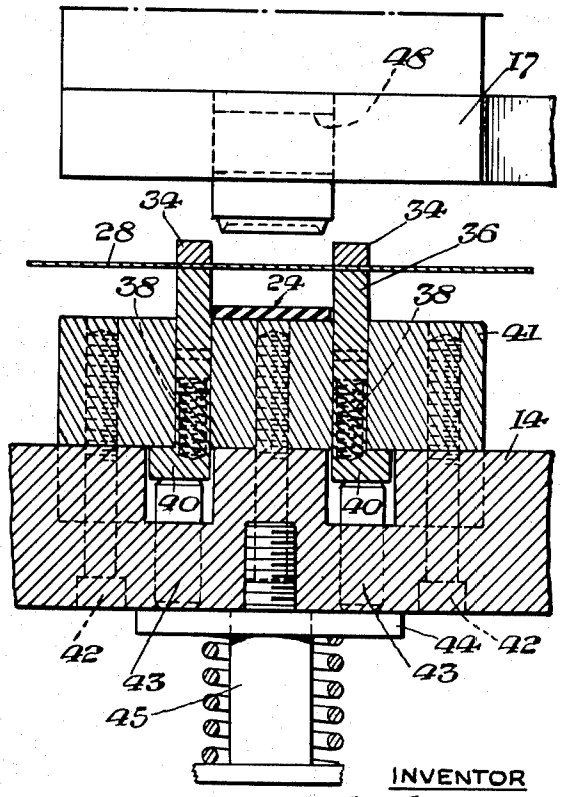

Fig. 6.

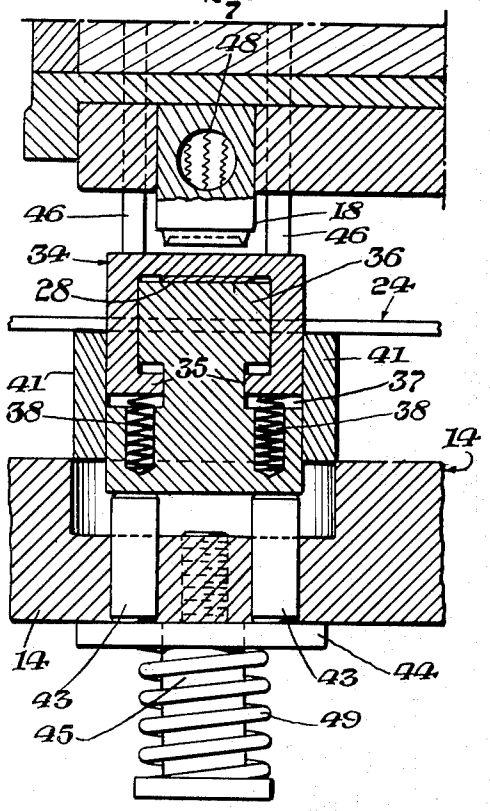

INVENTOR
Albert W. Franklin
BY Darby & Darby
ATTORNEYS.

United States Patent Office 2,753,619 Patented July 10, 1956

2,753,619

METHOD AND APPARATUS FOR STAMPING AND ADHERING CONDUCTIVE ELEMENTS TO NON-CONDUCTIVE BASES

Albert W. Franklin, Mount Vernon, N. Y.

Application October 23, 1952, Serial No. 316,444

9 Claims. (Cl. 29—155.5)

The present invention relates to a method and apparatus for stamping out conductive elements and in the same operation adhering those elements to non-conductive bases. One example of the use of such a method is to produce wiring components wherein a metallic circuit connection is stamped out and adhered to an insulating base material to form a unitary structure such, for example, as a tube socket.

The invention thus relates to methods and means for automatically stamping circuit connections from a continuous strip of conductive material, adhering the conductive material to a continuous strip of insulating material, and stamping unit elements from the insulating material to produce circuit connections, all the operations being performed as a continuous sequence of a single machine.

At the present time stamped wiring components of the type discussed above are produced by first producing the properly shaped and punched non-conductive base of the unit on a punch press and thereafter placing these units in the feed hopper of a second press and stamping out and adhering the conductive elements to the unitary bases in this second press.

My present invention provides for the production of the same units with a great saving in labor as well as in the complexity of the machine. All of the punching and stamping operations are now performed on a single machine and there is therefore no necessity for providing a feeding means for small individual parts and additionally a single punch press performs the entire work formerly performed by two punch presses thereby reducing the labor charge materially.

It is an object of the invention to provide a method and means for forming unit bases of insulating material from a continuous strip thereof, and stamping and adhering circuit connections of conductive material to said insulating bases, said conductive material being fed in a continuous strip.

It is a further object of the invention to provide an electric or electronic circuit component comprising conductive elements which are adhered to a base of insulating material, the entire unit being fabricated in a single sequence of operation on one machine.

It is another object of the invention to provide a method of operation whereby an ordinary punch press may be utilized in performing all the operations of the sequence mentioned above.

Other objects and features of the invention will be apparent when the following description is considered in connection with the appended drawings in which,

Figure 1 is a perspective view illustrating the punch and die set utilized in performing the operations to produce the units mentioned, the drawing also showing in dashed lines the usual punch press on which the punch and die set is mounted;

Figure 2 is a fragmentary vertical cross-sectional view of the device of Figure 1, the view being taken on the plane of the line 2—2 of Figure 1;

Figure 3 is a longitudinal vertical cross-sectional view of the punch and die set of Figure 1, the view being taken on the plane of the line 3—3 of Figure 2;

Figure 4 is a horizontal cross-sectional view of the die set of Figure 1, the view being taken on the plane of the line 4—4 of Figure 3 and showing the various steps of operation in producing the final result;

Figure 5 is an enlarged view of that portion of the die which effects the stamping of the conductive material and the adhering thereof to the non-conductive base. This view is a section along the plane of the line 4—4 of Figure 3;

Figure 6 is a vertical cross-sectional view of the punch and die structure of Figure 5, the view being taken on the plane of the line 6—6 of Figure 5;

Figure 7 is an enlarged cross-sectional view of the device of Figure 5, this view being taken on the plane of the line 7—7 of Figure 5;

Figure 8 is an enlarged fragmentary view of the punch of Figures 6 and 7 showing particularly the relieving of the punch;

Figure 9 is an enlarged view of one of the stamped wiring components produced by the particular die shown and which is illustrative of the product of the invention; and

Figure 10 is a plan view of another example of stamped wiring which is produced by my new process.

For purposes of clarification it is noted herein, as disclosed in my Patent No. 2,535,674, granted December 26, 1950, that the base or insulating strip may be of any suitable material such as for example fibreboard, of which "Masonite" is an example and various so-called plastic materials, of which "Bakelite" is an example, can be used.

As will appear later, since the stamping or cutting operation is effected by the entrance of the cutting edges of the die into the base material, any suitable base material can be used which has the proper insulating qualities and which is deformable by the cutting edges, that is will not shatter or crack under the stresses of the operations hereinafter described, all as is clearly apparent from said patent.

With regard to a suitable adhesive with which the conductive strip is coated, and as pointed out in said patent, any adhesive which is thermo-setting or thermo-plastic can be used. It can be applied as a coating to the base of the conducting strip which is superposed on the insulating strip, or it can be interposed therebetween in the form of a thin sheet of material, as a separate element.

Referring now to the drawings, there is shown at 10 a usual form of punch press having the vertically reciprocating head 11. The head 11 cooperates with a punch carrying plate 12 which is guided for vertical reciprocation on the upstanding rods 13, the rods 13 being in turn fixed to a lower die plate 14. Lower plates 14 are fixed to the bed plate 15 of the punch 10 in any suitable manner. The punch carrying plate 12 has fixed thereto in any suitable manner auxiliary plates 16 and 17 in which the punches 20, 21, 22 and 23 are fixed. Additionally the plate 17 carries the punch 18 which cuts out portions from the conductive strip 24. The lower die plates 14 are provided with bores 30, 31 and 33 therein cooperating with the punches 20, 21 and 23 respectively. An insert 25 in the upper one of the die plates 14 is provided with bores therein which cooperate with the punches 22 which are carried by an insert 26 in the upper punch plate 16.

A stripper plate of the usual form cooperates with the various punches mentioned and is indicated by the reference numeral 27.

In order to clamp the conductive strip 28 in proper position relative to the non-conductive base strip 24 dur-

ing the stamping out of conductive elements from strip 28 and adhesion thereof to the base strip 24, a means is provided in the punch and die set for holding the strip 28 during the punching or stamping operation. This means is best shown in Figures 5, 6 and 7.

The holding means mentioned comprises two clamps, one situated on either side of the strip 24 of insulating material. Each clamp comprises an outer U-shaped member 34 together with an inner anvil member 36. The outer clamping members 34 have bent-over ends 35 on each arm thereof and these bent-over ends extend into recesses 37 in the inner anvil member 36. The distance between the depending arms of the U-shaped outer members 34 is slightly greater than the width of the conductive strip 28.

Since the recesses 37 have a greater height than the height of the bent-over ends 35 they permit limited movement of members 34. The outer clamping members 34 are held in their uppermost position by means of springs 38 bearing against the ends 35 and inserted into bores in the base portion of the corresponding anvil 36. It will be noted that in Figures 6 and 7 the springs 38 are shown partly compressed so that the conductive strip 28 is clamped between the anvils 36 and the outer clamps 34.

Each anvil member 36 has a flange 40 thereon which extends for the full width of the anvil. The anvil members 36 are inserted in openings in the lower die plate 14 and are held in place by means of the plate 41 which overlies the flanges 40 and is fastened to the die plate 14 by means of the screws 42. Each inner clamping member or anvil 36 is supported on a pair of pins 43 which pins are inserted in the bores in die plate 14, the upper ends bearing against the lower edges of the anvils 36 and the lower ends bearing against a plate 44 which is slidable on adjusting rod 45. Rod 45 is screw-threadedly inserted into a correspondingly threaded bore in the plate 14 and a spring 49 bears against the head of the rod 45 and against the plate 44, thus resiliently urging the inner clamping member 36 upwardly.

Mounted in the upper die plate 12 in pairs with one pair above each clamp 34, are rods 46 which are pressed downwardly by the springs 47. The springs 47 are of greater strength than the springs 38 so that when the upper die plate descends the rods 46 press against the clamps 34, the springs 38 yield and the conductive strip 28 is clamped between the anvils 36 and the clamps 34. Springs 47 are furthermore stronger than the spring 49 and thus as the upper die plate continues its descent the spring 49 is compressed and the strip 28 brought against the strip 24.

Immediately above the point at which the insulated and conductive strips cross a die 18 is mounted, this die being shaped to stamp out the particular configuration of conductive material desired which in the present instance is indicated at 50 (Figures 4 and 9).

The die 18 is shown enlarged in Figure 8. As is clearly indicated in that figure the die comprises a cutting edge 70 formed in the desired configuration, the cutting edge having sloped sides the inner one of which, designated 71, terminates at a horizontal line indicated at 72. The outer shaped side designated 73 terminates at a horizontal line designated 74. The angle formed by lines 71 and 73 is preferably an acute angle and the slopes of the sides are such that approximately one-third the total angle is between the vertical and line 71 and two-thirds of the total angle between the vertical and line 73. For example, the total angle may be 75° in which case the portion between line 71 and the vertical will be 25° and the portion between line 73 and the vertical will be 50°.

The horizontal surface formed at 72 provides a means for pressing the desired cutout shape of conductive material against the insulating strip 24 while the relieving of the die surface indicated by the line 74 assures that undesired portions of the conductive strip will not be adhered to the insulating strip. Further the angle of the edges 73 as above specified assures that the scrap portion of the conductive strip 28 will not adhere to the conductive strip particularly because the clamping means exerts sufficient upward pressure against the strip 28 so that that strip tends to rise along the inclined edges 73 once it has been severed from the desired portion due to the action of the die 18.

Die 18 is heated by means of a heating element 48 which may be an electrical heating unit inserted in a bore in the die.

Referring now to Figure 1, a feeding means indicated at 52 is arranged to feed a strip of insulating material from right to left as seen in that figure, the feed being intermittently actuated in any suitable manner.

Conductive material is fed from a reel at the rear of the press and moves forwardly through the clamps 34 overlying the strip 24 being fed by means of a feeding means such as feed rolls indicated at 53, these feed rolls being also intermittently actuated in a timed relationship to the operations of the press and of the feeding means 52.

The operation of the device can best be described by setting forth the various stages of operation which result in a completed unit.

In the first stage the descent of the press head and punch 20, that punch cooperating with its die 30, produces the hole 54 indicated in Figure 4. This strip 24 is now advanced so that the hole 54 appears in a position 54*a*.

In the second stage of operation the pilot pin 56 fixed in the plate 17 enters the hole 54 which is now in the 54*a* position and thus adjusts the position of the insulating strip 24. As the upper die plate descends the spring pressed rods 46 come into contact with the outer clamps 34 and compress the springs 38 thus causing the strip of conductive material 28 to be clamped between the inner clamping members or anvils 36 and the outer clamping members 34. Since the combined effect of the springs 38 is less than the effect of the spring 49, this clamping action occurs prior to any descent of the closed clamps. However, as the upper die plate continues to descend spring 49 is compressed and the conductive strip 28 is lowered to come into contact with the insulating strip 24. After this has occurred the die 18 cuts out the desired configuration from the conductive strip and causes it to adhere to the insulating strip which lies under it.

Since the clamping members comprising the inner members 36 and the outer members 34 descend together only to an extent to place the lower surface of the conductive strip in contact with the upper surface of the insulating strip, that portion of the conductive strip which forms the scrap will rise slightly up the sloped surfaces 73 of the cutting edge 70 of die 18 assuring that the scrap, although coated with adhesive, will not adhere to the insulating strip.

As the die 18 rises the cutout portion of the conductive material remains adhered to the base material, the slope 71 of the cutting edges 70 being designed to free the material from the die. As the die rises the clamps rise remaining closed until the Figure 6 position is reached the scrap being stripped from the die. Later the clamps open at a level considerably above that of the insulating strip 24 thereby assuring that the conductive strip is free for the next feeding operation. This feeding operation next occurs and after that operation the hole first punched appears at 54*b* and the conductive strip at 50*b* (Figure 4).

In the third stage the upper die plate descends but without effect with respect to the particular unit under consideraion, that is, no punching is effected at this time. The strip 24 is again advanced through a unit step of movement and the hole 54 reaches the position 54*c* and the stamped conductive piece 50 the position 50*c*.

In the fourth stage, and of course upon descent of the press head, punch 21 cooperating with its die 31 punches

a hole indicated at 60*c* through the metal strip 50 and through the insulating base strip 24. At the same time a similar punch punches a hole through the left hand upper end of the conductive strip 50 and through the underlying insulating strip, the latter punch not being shown in the drawings, but the hole being designated 61. The strip is now advanced to a position in which hole 54 appears at 54*d* and strip 50 at 50*d*.

In the fifth stage, no operation is performed on the particular unit under consideration. The strip is next advanced to a position indicated by 54*e* and 50*e*.

In the sixth stage, a pilot pin 57 enters the center hole 60 to assure the proper positioning of the strip 24 and immediately thereafter the punches 22 which are arranged in a circular formation about the pilot pin 57 punch the seven small holes 62 around the central hole 60, these holes being made in the insulating strip 24 only. The material is advanced to the position in which hole 54 occupies the position 54*f*.

In the seventh stage, no operation is performed save that the pilot pin 58 enters the center hole 60 to assure proper alignment of the insulating strip 24. Strip 24 is advanced again to the position in which the hole 54 occupies the position 54*g*.

In the eighth stage, the punch 23 cooperating with the die bore 33 stamps out the completed unit in the shape indicated at 63.

Although the production of a single unit 63 has been described, this unit being shown in detali in Figure 9, it will be understood that there is a unit completed for each descent of the press head, the sequence of operation just described being performed on each piece. It will of course be understood that upon each descent of the press head a conductive strip of the shape shown at 50 is punched out and adhered to the underlying insulating strip. The insulating strip then progresses toward the left so that the following steps in the sequence are performed on a portion of the insulating strip which already has the conductive strip 50 adhered thereto.

The particular die set described is arranged so that a number of idle operations of the press head occur, as for example as those in the third, fifth and seventh stages. Although this arrangement is preferable, in order that there be sufficient material present in the die set to give adequate strength thereto it is entirely possible to so arrange the dies that each stage is an operating stage.

The particular configuration of the final unit and of the conductive strip thereon is purely exemplary; the size and shape of the insulating base as well as the size and shape of the conductive element and the number of conductive elements may be varied in many ways. Additionally, it will be understood that the size, number and location of the holes may be varied as desired.

Figure 10 illustrates a much more complex circuit composed of many more conductors and many more apertures than are indicated in Figure 9 and illustrates the formation of a more complex unit by the process heretofore described.

The insulating and conductive strips need not be fed at right angles to each other as shown but may be fed at other angles and in some instances material may be conserved by such angular feed.

Many other modifications may also be made and I wish therefore not to be limited by the foregoing description but on the contrary to be limited only by the claims granted to me.

What is claimed is:

1. The method of producing a stamped wiring component which comprises feeding a base strip of insulating material intermittently beneath a punch head, feeding a strip of conductive material having a heat activated adhesive coating on the lower face intermittently in timed relationship to the feed of and above and at an angle to said insulating strip, punching holes in the base strip, clamping the conductive strip to the base strip, punching

conductive elements from the conductive strip while so clamped, heating said conductive elements and said base strip at the areas of said conductive elements and pressing said punched and heated conductive elements against said base strip to cause them to adhere thereto, releasing said clamp to permit feeding of said conductive and insulating strips, and thereafter cutting out selected areas from said base strip.

2. The continuous method of stamping a desired configuration from a conductive strip having a heat sensitive coating on its lower face and adhering it to an insulating base which comprises holding the conductive strip at either side of and above the insulating strip, lowering the conductive strip while thus held to bring said coating into contact with the non-conductive strip, cutting the desired configurations from the conductive strip, and heating said configurations while holding the conductive strip in position with its lower side in contact with the non-conductive strip to unite them, the remaining portion of the conductive strip being under sufficient tension as the cutting operation is performed to assure that only the desired stamped out configurations are adhered to the non-conductive strip.

3. A method as claimed in claim 2 characterized in that the holding means first is caused to grip the conductive strip, is thereafter lowered while still gripping the strip into contact with the non-conductive strip, and is thereafter held in tension while the desired configuration is cut from the conductive strip.

4. In an apparatus for stamping a conductive element from a strip and adhering it to an insulating base, in combination, means for intermittently feeding a strip of base material, means for intermittently feeding a strip of conductive material at an angle to the base material, said feeding movements occurring simultaneously, punching means operating in the area of the crossing of the strips, such punching means being adapted to punch a desired shape of conductive unit from the overlying conductive strip and to adhere it to the base strip, and means comprising an anvil and clamping member for clamping said conductive strip at each side of the base strip during the punching of the conductive strip.

5. Apparatus as claimed in claim 4 further characterized in that each said clamping means comprises an inverted U-shaped member, the base of which overlies said conductive strip, the arms of which lie on either side of said base strip, said arms having bent-over ends extending into recesses in said anvil to thereby limit the movement of the clamping means.

6. Device as claimed in claim 5 further characterized in that said clamping means are spring pressed upwardly by springs inserted in bores in said anvil members, and said clamping members are operated by spring pressed rods in the press head, the springs operating said rods being superior to the springs pressing said clamps upwardly.

7. A device as claimed in claim 6 further characterized in that said anvil members are spring pressed upwardly by springs superior in strength to the springs operating on said clamping members and inferior in strength to the springs operating on said rods.

8. In an apparatus for stamping a conductive element from a strip coated with a heat sensitive adhesive and adhering it to an insulating base, in combination, means for simultaneously feeding the strip of base material and the strip of conducting material in superposed relation each a predetermined distance, means positioned at the sides of the feeding path of the base strip for initially clamping the conducting strip in a plane above the base strip, punching and heating means mounted for reciprocation in a direction normal to the overlying areas of said strips, and means operating with said punching and heating means for engaging said clamping means to move the conducting strip into contact with the base strip just prior to the punching and heating operation.

9. In the combination of claim 8, means for yieldingly resisting downward movement of said clamping means whereby the clamping means returns for a limited distance with the punching means on its return stroke.

References Cited in the file of this patent

UNITED STATES PATENTS

1,574,481	Hensley	Feb. 23, 1926
2,260,899	Heftler	Oct. 28, 1941

2,288,735	O'Connell	July 7, 1942
2,319,766	Cox et al.	May 18, 1943
2,467,242	Swartz	Apr. 12, 1949
2,535,674	Franklin	Dec. 26, 1950
2,618,311	Parker	Nov. 18, 1952

OTHER REFERENCES

"Materials and Methods" Magazine, April 1951, pages 79 and 80.