(12) INTERNATIONAL APPLICATION PUBLISHED UNDER THE PATENT COOPERATION TREATY (PCT)

(19) World Intellectual Property Organization
International Bureau

(43) International Publication Date
11 April 2013 (11.04.2013)

WIPO | PCT

(10) International Publication Number
WO 2013/052427 A2

(51) International Patent Classification:
E04C 2/26 (2006.01) *E04B 1/02* (2006.01)

(21) International Application Number:
PCT/US2012/058344

(22) International Filing Date:
1 October 2012 (01.10.2012)

(25) Filing Language: English

(26) Publication Language: English

(30) Priority Data:
61/544,222 6 October 2011 (06.10.2011) US
13/436,403 30 March 2012 (30.03.2012) US

(72) Inventor; and
(71) Applicant : **MORROW, Brian, D.** [US/US]; 2575 West 1680 North, Provo, Utah 84601 (US).

(74) Agents: **TODD, Matthew, D.** et al.; Workman Nydegger, 60 East South Temple, Salt Lake City, UT 84111 (US).

(81) Designated States *(unless otherwise indicated, for every kind of national protection available)*: AE, AG, AL, AM, AO, AT, AU, AZ, BA, BB, BG, BH, BN, BR, BW, BY, BZ, CA, CH, CL, CN, CO, CR, CU, CZ, DE, DK, DM, DO, DZ, EC, EE, EG, ES, FI, GB, GD, GE, GH, GM, GT, HN, HR, HU, ID, IL, IN, IS, JP, KE, KG, KM, KN, KP, KR, KZ, LA, LC, LK, LR, LS, LT, LU, LY, MA, MD, ME, MG, MK, MN, MW, MX, MY, MZ, NA, NG, NI, NO, NZ, OM, PA, PE, PG, PH, PL, PT, QA, RO, RS, RU, RW, SC, SD, SE, SG, SK, SL, SM, ST, SV, SY, TH, TJ, TM, TN, TR, TT, TZ, UA, UG, US, UZ, VC, VN, ZA, ZM, ZW.

(84) Designated States *(unless otherwise indicated, for every kind of regional protection available)*: ARIPO (BW, GH, GM, KE, LR, LS, MW, MZ, NA, RW, SD, SL, SZ, TZ, UG, ZM, ZW), Eurasian (AM, AZ, BY, KG, KZ, RU, TJ, TM), European (AL, AT, BE, BG, CH, CY, CZ, DE, DK, EE, ES, FI, FR, GB, GR, HR, HU, IE, IS, IT, LT, LU, LV, MC, MK, MT, NL, NO, PL, PT, RO, RS, SE, SI, SK, SM, TR), OAPI (BF, BJ, CF, CG, CI, CM, GA, GN, GQ, GW, ML, MR, NE, SN, TD, TG).

Published:

— *without international search report and to be republished upon receipt of that report (Rule 48.2(g))*

WO 2013/052427 A2

(54) Title: MODULAR BUILDING CONSTRUCTION SYSTEM USING LIGHT WEIGHT PANELS

(57) Abstract: Light-weight modular panel systems including a plurality of panels formed of a cementitious material, with a fiber-reinforced shell layer and an adjacent substrate layer. The panels employ a light-weight aggregate that provides the panels with the ability to be cut, sanded, drilled, screwed, and otherwise shaped using common wood working tools. A dual panel thickness wall construction may be formed by using the panels to provide interior and exterior portions of a wall construction. Seams between adjoining panels may be spanned with fiberglass mesh and bonded with polymer modified cementitious adhesive, providing excellent strength in that the joints between adjacent modular panels do not represent a weak point of the wall construction. The resulting wall provides greater strength than the individual panels, and results in a monocoque structure in which interior and exterior panels, and their respective fiber reinforced layers are spaced apart from one another.

MODULAR BUILDING CONSTRUCTION SYSTEM USING LIGHT WEIGHT PANELS

BACKGROUND OF THE INVENTION

1. The Field of the Invention

The present invention is in the field of modular building construction systems used within the construction industry.

2. The Relevant Technology

Building construction systems including modular features are sometimes used in the construction field. For example, particularly in third world countries where skilled labor is not readily available, and building materials must be relatively inexpensive, cinder block or brick materials are used in constructing homes, schools, and other buildings. It can be difficult to learn to lay block or brick while keeping the walls square and plumb. In addition, such systems require mortar to hold the individual blocks or bricks together.

Various other building materials and systems are also used in the art. Structural insulated panels (SIPs) are used extensively within the construction industry as an alternative to stick frame construction with insulation blown or laid within the cavities between stick framing members. A typical structural insulated panel may include an insulating layer sandwiched between two layers of structural plywood or oriented strand board ("OSB"). The use of such panels within residential and commercial construction projects can often significantly decrease the time required for construction, and also typically provides superior insulating ability as compared to a traditional structure constructed of block or brick, or even stick frame construction with insulation blown or laid between frame members. That said, one drawback with such systems is that stick frame construction and SIP construction

typically require some level of skilled labor, and thus are not particularly well suited for use in environments where such skills are not readily available. In addition, such materials are often prohibitively expensive in such environments.

In addition, SIPs include wood skin layers that require some type of finish material on both the interior and exterior surfaces of a wall construction. Furthermore, because they are formed of wood, they are subject to water damage, fire damage, and they present a food source for insects.

SUMMARY

The present invention is directed to light-weight modular panels, related panel systems, and constructions (e.g., a wall system) that may be formed therefrom. The panels are light-weight, but formed of a cementitious material so that they do not present a food source for insects, are rot resistant, fireproof, etc. In addition, the light-weight panels can be inexpensively manufactured, and as a result of the materials employed in the cementitious composition, are capable of being cut, sanded, screwed, nailed, and generally shaped through use of common wood working tools. In other words, no special cement, concrete, or ceramic cutting blades or other specialized shaping tools are required in order shape the light-weight cementitious panels. Because the panels are cement based and can be molded to include any desired finish texture, they do not require any additional finish on the interior or exterior of the wall system. In other words, the structural panel itself may serve as the exterior and interior finish.

In one embodiment, each panel (e.g., in a generally rectangular shape) is formed of a cementitious material and includes a front surface, a back surface, and edge surfaces defined between the front and back surfaces. The panel may not be entirely homogenous throughout its thickness, but may include at least two layers that

differ from one another. In one embodiment, the layers include a shell layer and an adjacent substrate layer. The shell layer may comprise a light-weight aggregate and a plurality of reinforcing fibers dispersed and bonded within a cementitious matrix. The substrate layer may comprise a light-weight aggregate dispersed within a bonded cementitious matrix, and may be substantially void of reinforcing fibers (e.g., the reinforcing fibers may be included within the shell layer only). The light weight aggregate may have a density of not more than about 30 lbs/ft^3, and provides the resulting cementitious material of the panel with the ability to be shaped with common wood working tools as described above.

Another embodiment is directed to a light-weight modular panel wall construction system that can be used to construct a wall or other structure. Such a system may include an interior panel including an exposed interior surface (i.e., the front surface), an opposite interfacing surface (i.e., the back surface) for interfacing with an exterior panel of a material sandwiched between the interior panel and an exterior panel when the panel system is assembled, and edge surfaces between the interior and exterior surfaces. A similar exterior panel is also provided, including an exposed exterior surface, an opposite interfacing surface for interfacing with the interior panel or a material (e.g., a foam insulative core) sandwiched between the interior panel and the exterior panel when the panel system is assembled, and edge surfaces between the exterior and interfacing surfaces.

Each panel of the panel system is formed of a cementitious material, and includes a shell layer and an adjacent substrate layer. Each shell layer provides the respective interior or exterior surface of the panel of which it forms a part (i.e., the shell layer is oriented "out" in the wall assembly including dual panels). The shell layer may comprise a light-weight aggregate and reinforcing fibers dispersed and

bonded within a cementitious matrix. The substrate layer provides the interfacing surface opposite the interior or exterior surface of the shell layer, and comprises a light-weight aggregate dispersed and bonded within a cementitious matrix. The substrate layer may include substantially no reinforcing fibers, so that they are included within the shell layer only.

To construct a wall system, a plurality of interior panels are directly or indirectly attached to a plurality of exterior panels so that interfacing surfaces of respective panels are oriented towards one another (i.e., back surface to back surface) in a manner such that seams defined between adjacent edges of the interior and exterior panels are staggered when the panel system is assembled. Joints between adjoining panels may be finished with a fiberglass mesh spanning the joint, which may be bonded to the panel with a polymer modified cementitious adhesive. Testing has shown that employing a 4.75 inch or wider fiberglass mesh bonded to the panel with the polymer modified cement based adhesive results in a joint that is at least as strong as the panel itself.

The assembled system of panels provides excellent strength characteristics as a result of the respective shell layers of the interior and exterior panels being adjacent the exposed interior and exterior surfaces of the wall structure. Such a configuration results in a monocoque structure in which the strength and load bearing characteristics of the wall construction are greatly increased because the spaced apart cementitious panels and outer disposed fiber reinforced shell layers carry all or a major part of the stresses applied to the assembled panel system. Such a wall construction exhibits strength characteristics significantly greater than that of the individual panels from which it is constructed.

Features from any of the disclosed embodiments may be used in combination with one another, without limitation. In addition, other features and advantages of the present disclosure will become apparent to those of ordinary skill in the art through consideration of the following detailed description and the accompanying drawings.

BRIEF DESCRIPTION OF DRAWINGS

The drawings illustrate several embodiments of the invention, wherein identical reference numerals refer to identical or similar elements or features in different views or embodiments shown in the drawings.

Figure 1A is an isometric view of an exemplary cementitious panel;

Figure 1B is a cross-sectional view through the panel of Figure 1A;

Figure 2 is an isometric view of a construction in which a first tier of interior panels having been attached to a flooring system;

Figure 3 is an isometric view of the construction of Figure 2, in which foam sheets have been placed adjacent the interior panels;

Figure 4 is an isometric view of the construction of Figure 3, in which exterior panels have been placed adjacent the foam core and showing how a roof truss may be attached to the dual panel thickness wall construction;

Figure 5 is an isometric view of the construction of Figure 3, in which exterior panels have been placed adjacent the foam core and showing how a subsequent flooring system may be attached to the dual panel thickness wall construction;

Figure 6A shows how a seam between adjacent panels on a given front face of a wall construction may be finished with a reinforcing mesh and adhesive along a bevel formed adjacent the panel edges;

Figure 6B is a close up view of the reinforcing mesh and adhesive applied over the beveled surfaces on either side of the seam between adjacent panels;

Figure 7 is an isometric view of a dual panel thickness wall construction including a window opening;

Figure 8 is an isometric exploded and cut-away view showing a hold down positioned vertically within the core of a dual panel thickness wall construction;

Figure 9 is an isometric cut-away view showing a load bearing column positioned vertically within the core of a dual panel thickness wall construction;

Figure 10 is an isometric cut-away view showing a load bearing header positioned horizontally within the core of a dual panel thickness wall construction over an opening within the wall. Such headers may be provided where lengthy spans are desired (e.g., over 6 feet), as the load bearing capacity of the dual panel thickness wall assembly is sufficient for shorter spans; and

Figures 11A-11B show isometric and cross-sectional views, respectively of a panel similar to that of Figure 1, but including a plurality of slots formed into the substrate layer thereof to allow the panel to bend.

DETAILED DESCRIPTION OF THE PREFERRED EMBODIMENTS

I. Introduction

In one embodiment, the present invention is directed to modular building systems comprising a plurality of light-weight modular panels configured for direct or indirect attachment to one another within a dual panel thickness wall system. For example, one panel provides a wall with an interior surface, while the other panel provides the wall with an exterior surface when the panels are positioned with back surfaces oriented towards one another. A foam core or any other material may be sandwiched between the interior and exterior panels.

The panels are advantageously formed of a cementitious material, and include two differently configured layers (e.g., a fiber-reinforced shell layer and an adjacent

substrate layer) to provide engineered strength characteristics to a wall constructed with dual panel thickness in which the panels are oriented so that fiber-reinforced shell layers of each panel are oriented "out", providing in a monocoque structure.

II. Exemplary Panels and Panel Systems

Figures 1A-1B show an exemplary generally rectangularly shaped panel 100 according to the present invention. Panel 100 is formed of a light-weight cementitious material, and includes a front surface 102, a back surface 104, and edge surfaces 106 defined between the front and back surfaces 102 and 104. As shown in Figure 1A, front surface 102 may be beveled adjacent edges 106. Front surface 102 is intended for placement facing "out" when the panel is included within a wall construction defined by dual panel thicknesses (i.e., panels placed back-to-back, optionally with a foam core sandwiched therebetween). Beveled surfaces 108 allow the "out" facing exposed front surface 102 of panel 100 to be finished by taping seams between adjacent panels of any given half (i.e., interior or exterior halves) of a dual panel thickness wall construction, and to provide a smooth, substantially flush, and even thickness profile over the finished wall surface. In other words, because surfaces 108 are beveled, they are slightly thinner at this location as compared to a central portion of panel 100, so as to be able to accommodate the tape and accompanying adhesive applied over the joint, while providing a finished thickness that is substantially the same as for the other (e.g., the central) portion of the panel.

Figure 1B shows a cross-sectional view through panel 100 illustrating how back surface 104 may include no bevel, as this surface becomes positioned within the interior of the wall structure, where it may not be visually observed. If desired, the back surfaces may also be taped and finished with an adhesive, although because this surface will not be seen in a dual thickness wall system, no bevel may be present on

back surface 104. In other embodiments, both front and back surfaces 102 and 104 may be beveled adjacent edges 106, where desired.

The layered configuration in which panel 100 includes two different layers is also apparent in Figure 1B. As seen in Figure 1B, panel 100 includes a shell layer 110 and an adjacent substrate layer 112. Both shell layer 110 and substrate layer 112 may be formed of a cementitious material including a light-weight aggregate, although characteristics may differ from one layer to the other. For example, shell layer 110 may advantageously include a plurality of reinforcing fibers dispersed therein, bonded within the cementitious matrix with the light-weight aggregate.

Substrate layer 112 may also include a light-weight aggregate dispersed within the cementitious matrix, although substrate layer may be substantially void of reinforcing fibers. Substrate layer 112 may have an aggregate to cement ratio that differs from the aggregate to cement ratio of shell layer 110. In addition, the light-weight aggregate collectively may differ somewhat from the light weight aggregate collective characteristics of the substrate layer. For example, the light-weight aggregate of shell layer 110 may have a somewhat higher average density than that of the substrate layer. This may be achieved by using a mixture of aggregates within the shell layer 110.

These differences between the shell layer and the substrate layer (e.g., higher light-weight aggregate density, higher aggregate loading, and the inclusion of reinforcing fibers within the shell layer) provide an engineered monocoque structure when the panels are used in constructing a dual panel thickness wall. The shell layer 110 provides increased strength characteristics as a result of its particular characteristics as compared to substrate layer 112. In a dual panel thickness wall construction, the shell layers of both the interior panels and the exterior panels are

oriented outwardly, so as to provide spacing between the shell layers 110 of the interior panels versus the shell layers 110 of the exterior panels. Such spacing (which may be further increased through inclusion of a foam core between interior and exterior panels) results in a monocoque structure in which the outer disposed fiber reinforced shell layers or regions carry all or a major part of the stresses applied to the assembled panel system. The adjacent substrate layers of interior panels and exterior panels may also be spaced apart from one another (e.g., where a foam core or other cavity is provided therebetween), thereby also providing monocoque structural benefits.

In one embodiment, the light-weight aggregate is the only aggregate included within the cementitious composition from which the panels are formed (i.e., no other aggregates, such as sand, gravel, small stones, and other relatively dense aggregate materials are included). This may be particularly so with respect to substrate layer 112. The aggregate to cement ratio within shell layer 110 may be about 40 parts aggregate to about 60 parts cement, by volume. More generally, the ratio may range from about 30 aggregate:70 cement to about 60 aggregate:40 cement, or about 35 aggregate:65 cement to about 45 aggregate:55 cement. While the water to cement ratios described herein may be per weight, the aggregate to cement ratios may be volumetric.

Substrate layer 112 may be more heavily loaded with aggregate than shell layer 110. The aggregate to cement ratio within substrate layer 112 may be about 50 parts aggregate to about 50 parts cement, by volume. More generally, the ratio may range from about 40 aggregate:60 cement to about 60 aggregate:40 cement, about 45 aggregate:65 cement to about 55 aggregate:45 cement, or about 35 aggregate:65 cement to about 55 aggregate:45 cement. In one embodiment, the aggregate to

cement ratio is higher within the substrate layer than the shell layer, as explained above. Varying the aggregate to cement ratio alters the density of the particular layer of the panel, which can be used to alter the compressive strength, screw hold strength, and other characteristics of the structural panel.

In addition, the aggregate within the shell layer 110 may be of greater density than that provided within the substrate layer 112. For example, the aggregate included within the shell layer may comprise a mixture of the light-weight aggregate employed within substrate layer 112 in combination with a microsphere aggregate. In one embodiment, the mixture may include a ratio of about 40% microsphere aggregate to about 60% microsphere aggregate, with the balance of the aggregate consisting of the light-weight aggregate employed in the substrate layer 112. In other words, both the light weight aggregate and microsphere aggregate may be present in a range of about 40% to about 60% (e.g., by volume). In one embodiment, a 50:50 mixture is employed. The inclusion of the microspheres may increase the density of the aggregate mixture included within the thin shell layer to about 30-about 40 lbs/ft^3. This, particularly when coupled with a lower aggregate to cement ratio, provides the shell layer with a density that is higher than the density of the adjacent substrate layer. Because the shell layer may be relatively thin relative to the substrate layer, the overall density of the cementitious panel still remains relatively low.

The reinforcing fibers within shell layer 110 may comprise glass fibers having a length from about 1 inch to about 3 inches, or from about 1.5 inches to about 2 inches. The glass fibers may comprise about 2% to about 10%, or from about 3% to about 5% by weight of shell layer 110. In one embodiment, the glass fibers may have a diameter from about 0.05 mm to about 1 mm, from about 0.1 mm to about 0.75 mm, or from about 0.25 mm to about 0.5 mm. In one embodiment, the glass fiber bundles

may have a fineness value from about 1000 tex to about 5000 tex, or from about 2000 tex to about 3000 tex (e.g., about 2500 tex).

In one embodiment, shell layer 110 is significantly thinner than the thickness of substrate layer 112. For example, shell layer 110 may comprise about 5% to about 30% of the thickness of panel 100, with substrate layer comprising about 70% to about 95% of the panel thickness. More generally, shell layer 110 may comprise from about 10% to about 20% of the panel thickness, with substrate layer 112 accounting for about 80% to about 90% of the panel thickness. By way of example, a 1.75 inch thick panel may include a shell layer having a thickness of about 0.25 to about 0.5 inch. In one embodiment, e.g., where the panel is beveled, panel thickness may refer to maximum thickness. The cementitious shell layer and cementitious substrate layer may be formed and cured simultaneously, so that the layers include a strong cementitious bond to one another, providing an integral panel without any need to otherwise adhere or attach the layers together. For example, the layers may be cast simultaneously.

The cementitious material of the panels may include cement and a light-weight aggregate filler material. The light weight aggregate material may advantageously be a pozzolan material, such that it reacts with cement during curing. Water and other admixtures may also be included (e.g., plasticizers, shrink compensators, curing accelerators, polymers, etc.). The inclusion of a polymer (e.g., a polymerizable acrylic) may be particularly beneficial within the shell layer. The light-weight aggregate material may have a density of not more than about 30 lbs/ ft^3. Preferably, the light weight aggregate has a density of only about 10 lbs/ ft^3, or less (e.g., from about 3 lbs/ $ft^3$and about 15 lb/ft^3, from about 3 lbs/ ft^3 to about 10 lb/ft3, or from about 3 lbs/ ft^3 to about 5 lb/ft^3), or not more than about 10 lbs/ ft^3). The

referred to density of the light-weight aggregate material may be an average density, particularly in the case of the shell layer, which may include a mixture of the same light-weight aggregate found in the substrate layer as well as microspheres, which have a higher density.

In one embodiment, the light-weight aggregate may be an expanded silica based material, e.g., derived from volcanic material which is heated so that water trapped within the material causes the material to expand.

In one embodiment, the mesh size of the expanded silica light-weight aggregate may be from about 0.149 mm to about 4.75 mm. In one embodiment, the mesh size of the microsphere aggregate may be from about 0.048 mm to about 0.595 mm. Within the given mesh size ranges, the particle size distribution may be substantially uniform.

The density of the final cementitious material may depend in large part on the weight fraction of such light-weight aggregate material included. The water to cement ratio may be from about 0.25:1 to about 0.5:1. The water to cement ratio in the shell layer may be from about 0.25:1 to about 0.5:1, while the water to cement ratio in the substrate layer may be lower than that in the shell layer, e.g., from about 0.25:1 to about 0.35:1. In one embodiment, the composition is substantially free of sand, which is not light-weight.

The desired density of the overall panel may alternatively (or additionally) be achieved through incorporation of a cellular (e.g., foamed) admixture that creates air bubbles or voids (micro-sized air voids) within the cured structure. The silica based light-weight aggregate may be relatively inert (other than its pozzolan characteristics), and results in a panel with excellent compressive strength relative to material density (e.g., 55 lb/ft^3 concrete panel density provides a compressive strength of about 900 to

about 1100 psi, while the panel may provide flexural strength of about 500 to about 600 psi).

The panel as a whole may have a density from about 40 lb/ft^3 to about 70 lb/ft^3, from about 50 lb/ft^3 to about 65 lb/ft^3, or from about 55 lb/ft^3 to about 60 lb/ft^3 (similar to the density of water). Because of the different compositional characteristics of the shell layer versus the substrate layer, the shell layer may have a density from about 80 lb/ft^3 to about 90 lb/ft^3, while the substrate may have a density from about 45 lb/ft^3 to about 60 lb/ft^3. Because of the panel's low density, the panels can be provided in relatively large panels (e.g., about 3 feet by 5 feet with a thickness from about 1.5 to about 2 inches thick), while still being sufficiently light to be easily manipulated by hand. In one embodiment, a 3 feet by 5 feet panel with a 1.75 inch thickness may weigh no more than about 150 pounds, allowing them to be easily moved and manipulated by two workers.

In one embodiment, the panels are advantageously cellulose and wood free, do not rot, do not provide a food source for insects, are dimensionally stable, and are substantially protected in the event of fire, as the material will not readily burn (i.e., the panels provide all the advantages of concrete). Furthermore, the panels are also shapable by cutting, sanding, drilling, and screwing using only common woodworking tools. In other words, special concrete cutting or other working tools are not required.

In addition, the panels provide relatively high thermal mass and insulative value, particularly when assembled into a dual panel thickness wall construction including a foam core. The panels provide excellent axial, shear, and flexural strength characteristics, particularly when assembled into a dual panel thickness wall. The panels may be used for any desired purpose, e.g., they could be used to construct a

ballistic barrier (e.g., two layers of 1.75 inch thick panels stops a 0.40 caliber projectile fired from a pistol at 5 ft.). Additional layers could be placed back to back for additional ballistic stopping ability.

If desired, a surface texture may be molded or cast into the panel surfaces (e.g., which may be formed together within a casting or molding type operation in which the uncured cementitious material of layers 110 and 112 are cured together, so as to form a strong cementitious bond to one another).

Figures 2-5 show a progression of how the panels may be used in constructing a dual panel thickness wall system, as well as how the wall construction may be attached to other construction features. Figure 2 shows a plurality of interior panels 120 positioned on a flooring system 122 supported on joists 124. Flooring system 122 may be formed with the inventive light-weight panels, or may be a conventional flooring system of plywood or OSB on joists 124, or a concrete slab. As seen in Figure 2, an anchor plate 126 may be attached (e.g., nailed, screwed, or glued) to floor 122, so as to become embedded within the wall structure once completed. Anchor plate 126 may comprise wood (e.g., two 2x4s nailed or otherwise fastened together) to form a 3.5 inch x 3 inch thick member. The 3 inch dimension may be the same as that of a foam core to be installed. Where floor 122 comprises a concrete slab, anchor plate 126 may be pressure treated wood. Anchor plate 126 provides a better anchor than foam core 132 adjacent a bottom edge of the wall structure for attachment of the panels and other structure. It also may serve as a template to guide positioning of panels 120.

As shown at 128, each adjoining panel of interior panels 120 may be toenail screwed or otherwise fastened into each other. The material characteristics of the panel material advantageously allow such angled toenailing without significant risk of

chipping or breaking when such attachments are made near the edge of the panels. In other words, the panels do not readily chip or break when a screw or nail is driven into the panel near its edge.

Similarly, screws or nails may also be driven through the interior surface of panels 120 and into anchor plate 126, along the bottom edge of each panel 120. At corners, e.g., corner 130, screws or nails 128 may be driven from the back surface of the panels 120 of corner 130 into the edge surface of the adjoining panel 120.

Figure 3 shows the construction shown in Figure 2 at a more advanced progression in which foam core sheets 132 have been positioned against interior panels 120, over anchor plate 126. Such a foam core 132 may be positioned once interior panels 120 have been stacked and secured at corners, intersecting walls, and toenail fastened into each other. The stack of interior panels 120 may be supported temporarily with a ram or bracing if needed. Foam core sheets 132 may be glued or otherwise adhered to the back surface of interior panels 120 with an appropriate adhesive (e.g., a urethane adhesive). Such a foam core may comprise any suitable foam material, such as expanded polystyrene ("EPS"). The foam core 132 may also serve as a vapor barrier where joints 134 between adjacent foam core sheets 132 are sealed with a non-permeable tape.

Any hold down threads, such as that shown at 136, may be connected to corresponding anchors within the structure foundation. Such hold down threads may simply pass through foam core 132, or may be routered into the back surface of panels 120. Because panels 120 can be worked as readily as wood, without the need for any specialized concrete working tools, this can be easily achieved. A hold down plate 138 with an accompanying nut may be placed adjacent upper anchor plate 126' to hold down the wall at designated locations so as to resist uplift and seismic forces. For

example, such hold downs are often positioned in corners of buildings and at large openings (e.g., large windows).

Foam core 132 provides easy access for installation of electrical components, plumbing components, or any other internal wall components desired. For example, as indicated at channel 140, such components may easily be run within the space (e.g., typically 3 inches thick) occupied by the foam core. Such a 3 inch thick space allows relatively thick plumbing components to be easily run within the space of foam core 132. The foam core 132 may simply be cut away as needed where such components are to be installed within the wall. Where the wall system includes no ties running through the thickness of the wall, it is not generally required by code to run electrical wiring within protective conduit, which makes electrical wiring of the building quicker, less expensive, and simpler.

Figure 4 shows a further progression than that shown in Figure 3, in which a plurality of exterior panels 142 have been positioned adjacent foam core 132, so that foam core 132 becomes sandwiched between interior panels 120 and exterior panels 142. Positions in which some exterior panels 142 would eventually be positioned against foam core 132 are not shown in Figure 4 in order to better illustrate the various layers of the wall construction. As shown in Figure 4, where the flooring system 122 is supported on joists 124, exterior panels 142 may overlap joists 124, and be attached (e.g., screwed or nailed) into joists 124. A bottom edge of exterior panels 142 may bear on a foundation (not shown) of the building, while the foam core 132 and interior panels 120 may bear on flooring system 122. Extension of exterior panels 142 below the floor surface of flooring system 122, and attachment into joists 124 results in a very strong connection between flooring system 122 and the wall construction, providing particularly good shear strength.

In addition, where interior panels 120 and exterior panels 142 are similarly sized (e.g., 3 ft x 5 ft), the fact that exterior panels 142 drop down lower on the exterior panel layer of the wall construction results in staggering of horizontal seams or joints of the interior versus exterior panels. Of course, even if the bottom edges of corresponding interior and exterior panels are aligned, one of the panels may simply be cut (e.g., to provide a width less than the original 3 ft) so as to result in the desired staggering of seams. Similarly, the 5 ft dimension may be cut on either the interior or exterior panels to achieve staggering of the vertical seams.

A roof truss 144 or other roofing system may be easily attached to an upper anchor plate 126' (e.g., formed by nailing or otherwise attaching 2 2x4s together) placed atop foam core 132. Both upper and lower anchor plates 126 and 126' may be glued, nailed, or otherwise attached to the adjacent interior panels 120 and exterior panels 142.

Because exterior panels 142 are cement based, they are ready for application of exterior finishes such as stucco, color coating, concrete stain, brick, or stone. Veneers such as brick, stone, or siding may be directly attached into exterior panels 142 using common construction methods, as panels 142 can be easily nailed or screwed into. In addition, where desired, the exterior panels 142 may be left unfinished, as the cementitious material of the panels is capable of withstanding weather elements without any further finish. This is a marked difference relative to SIP panels, in which the OSB sandwiching layers are not capable of withstanding weather elements, but require further finishing. Furthermore, exterior panels 142 may have a stone, brick, or other texture molded into the outer surface of the panel, resulting in decreased cost for providing a stone, brick, or other veneer. In another

embodiment, a bottom tier of exterior panels may include such a molded texture, while higher tiers do not, so as to provide an integral wainscot.

The front or back surfaces of panels 120, 142 may be coated with any desired material. For example, where constructing an agricultural structure such as a hog house, the surfaces 102, 104 of the panels may be coated with a polyurea coating material so as to facilitate hygienic conditions and provide for quick and easy periodic wash down of the wall structure.

Figure 5 illustrates an alternative to the progression shown in Figure 4, in which a subsequent floor is provided within the building construction prior to any roofing system 144. As seen in Figure 5, where such a subsequent floor is desired, exterior panels 142 may overlap such flooring joists 124'. Nails or screws may be driven through the exterior of panels 142 into joists 124'. This provides a connection with excellent shear strength characteristics between the subsequent floor and the wall system. Floor joists 124' may bear directly on interior panels 120 and upper anchor plate 126'.

Figures 6A-6B show how the front surface 102 of each panel 100 is beveled at 108 adjacent edge surface 106 to facilitate taping and finishing of seam 146. As shown, a fiberglass or other mesh of reinforcing material 148 may be adhered over beveled portions 108 along seam 146. A polymer modified (e.g., acrylic) cement based adhesive 150 may be applied over mesh 148 to cover seam 146, as well as to provide increased connective strength between adjacent panels 100. Beveled portion 108 may extend about 2-3 inches on either side of seam 146, which beveled portion becomes taped with mesh 148 and finished with adhesive 150.

Figure 7 shows a wall construction 152 formed with dual panel thickness (i.e., a layer of interior panels 120 and a layer of exterior panels 142), with an optional

foam core 132 disposed therebetween. Upper anchor plate 126' is also shown, sandwiched between interior panel 102 and exterior panel 142, atop foam core 132. As illustrated, window opening 154 may be easily cut into wall construction 152. Because panels 120 and 142 are easily cut with ordinary wood working tools, such cutting of window opening with a typical wood saw is easily accomplished. In addition, because the cementitious material of panels 120 and 142 can be nailed and screwed into with ease (as easily as wood), any window fixtures or door jams may simply be directly nailed or screwed into the panels 120, 142 bounding opening 154. No window or door bucks are required, as with other cementitious wall constructions. In one embodiment, if desired, one or more anchor plates similar to plates 126 and 126' may be inserted into the cavity occupied by foam core 132 around the perimeter of window opening 154.

Figure 8 shows another wall construction 152, including a hold down thread 136 and associated hold down plate 138 positioned within wall construction 152 to resist seismic and uplift forces or loads within the structure. Foam core 132 may be bonded to interior panels 120 and exterior panels 142 with a suitable adhesive (e.g., urethane based). As shown, coupling nut 137 may attach a floor anchor to thread hold down rod 136. Seam 134 defined between adjacent foam core sheets 132 may be sealed on the exterior side (i.e., adjacent exterior panels 142) with a Class III or better vapor barrier. In addition, a 0.25 inch foam seal 133 or similar may be placed under lower anchor plate 126 and/or under panels 142, 120. Anchor plates 126 and 126' may be glued, nailed and/or screwed into adjacent panels 120, 142. Inclusion of anchor plates 126 and 126' at the top and bottom of wall construction 152 simplifies attachment of subsequent floors and roof systems, as plates 126, 126' provide a better anchor than foam core 132. Of course, panels 120, 142 themselves also provide a

suitable anchor. Inclusion of anchor plates 126, 126' advantageously provides the entire wall thickness at these locations with anchoring ability.

In one embodiment, foam core 132 may comprise a foam having a density of at least 1 lb/ft^3. Foam core 132 may provide an insulative value of about R4 per inch of foam core thickness, such that a 3 inch foam core may provide an R value of about R12. Panels 120 and 142 each provide an R value of about R3.5 per 1.75 inch thick panel (e.g., R7 for a dual panel thickness wall as seen in Figure 8). Total R value of wall 152 may thus be about R19. In addition to the R value, panels 120 and 142 provide a relatively high thermal mass, so as to better resist changes in temperature. This also acts to maintain the temperature of the interior of the building at a desired level, reducing heating and cooling costs. It is advantageous to have the high thermal mass of the interior and exterior panels on the outsides of the wall assembly, with the low thermal mass foam core within the interior of the wall assembly as provided. Other systems (e.g., insulated concrete form ("ICF") systems) provide exactly the opposite configuration.

Figure 9 shows attachment of a roof truss 144 similar to that shown in Figure 4. As shown in Figure 9, a load bearing column 156 may be vertically oriented at any desired location within the foam core interior of wall construction 152. Such a load bearing column may comprise any suitable supporting material, e.g., wood or steel. Because of the method of construction in which one layer of panels is placed first (e.g., interior panels 120 followed by progressive construction of the thickness of the wall 152), there is excellent opportunity to place components within the interior of wall 152 during construction (e.g., they may be embedded within the space for foam core 132).

Such load bearing vertical column members 156 may be helpful in accommodating point compressive loads such as may be present when roof trusses or floor joists span large distances. For example, an agricultural shed (e.g., a hog house) might include a truss span of about 75 feet, with truss spacing of about 4 feet. Such a configuration may be easily accommodated by placement of vertical load bearing columns below each truss 144. Because column 156 is sandwiched between panels 120 and 142, any shear or lateral loads are accommodated by panels 120, 142 (i.e., to prevent column 156 from buckling), while much of the axial load is accommodated by column 156.

Such columns could also be used to increase the flexural capacity of the wall system on tall walls (e.g., greater than a typical 8-12 ft height). As will be readily apparent, a steel structure, any necessary electrical wiring and related components, plumbing components, or any other components could be completely hidden between interior and exterior panels 120, 142. Such components are easily placed during wall construction given the progressive wall construction which provides complete access to the interior of the wall (i.e., the cavity corresponding to foam core 132) during construction. For example, expanded steel mesh (e.g., within a prison wall), acoustic or soundproofing treatments, solar air heating components, or any other desired structure may be positioned within the cavity corresponding to foam core 132.

Concrete wall panels 120, 142 in combination with foam core 132 connected to one another create a monocoque system that envelopes any steel or other components or structure within the cavity corresponding to foam core 132, providing excellent shear strength to the overall structure.

The panels may similarly be employed for flooring or roofing, effectively taking the place of drywall and other sheeting members (e.g., OSB and plywood). For

example, a single layer of panels (e.g., without any dual layer or foam core) may be nailed or screwed into roof trusses 144 to provide a ceiling within a room. When used for flooring or a ceiling, the fiber reinforced shell layer of each panel is preferably oriented "out".

Figure 10 shows a modification similar to that shown in Figure 9, but in which a horizontally oriented header 158 may be inserted within the space corresponding to the cavity optionally occupied foam core 132. Such a header 158 may be disposed along the top portion of wall construction 152, above opening 154. Inclusion of such a header 158 increases the load bearing capacity of wall 152 in the area of opening 154. Header 158 may comprise dimensional lumber, a steel beam, or similar material placed and attached (e.g., screwed, nailed, glued, etc.) within the cavity corresponding to foam core 132. Such a header 158 becomes hidden within the cavity formed by the interior and exterior panel layers. Such a header may be desirable where opening 154 is greater than about 4-5 ft, where panels are 1.75 inches thick.

One advantage associated with the described panel systems is that when attached to one another in the manner described above, the weak point of such a panel system is not the joint between adjacent modular panels of the system. Rather, strength testing of walls formed from the modular panel systems have shown that the strength of the joint (e.g., seam 146) is actually greater than the strength of the surrounding panel material. As such, failure occurs within the body of the panel, rather than along seams between panels. Such a characteristic is in contrast to the strength characteristics of a similar wall construction made of modular SIP OSB/foam core panels and other existing modular building systems. Because the seams or joints between adjacent panels are actually stronger than the surrounding panel material

itself, a wall constructed from the modular panels acts as a single integral structure, with its strength not limited by the modularity of the wall construction.

While attachment of panels using screws or nails is often described, it will be readily understood that one or more of any such any suitable attachment mechanisms, whether mechanical or adhesive or otherwise, may be employed. The system advantageously does not require any mortar or grout to assemble the panels together, as do other cementitious building systems (e.g., cinder block).

In construction, the floor panels act as a template, eliminating the need for plumbing, squaring, or even a tape measure to assemble the system. Thus the system is particularly well tailored for third world construction environments where skilled labor may not be available.

Final, finished textures may be cast into the panel surfaces (e.g., the fiber-reinforced "front" shell layer of the panel). Because walls are formed by double layers of the panels (interior and exterior), the aesthetically "good" surface of the panel may be disposed outward, the side that is seen, while the other surface may become the interior of the wall, which is not seen. Because only a single good surface is needed, the panels can be cast or molded in a "horizontal", rather than "vertical" position. While some vertical position casting or molding systems may allow providing opposed faces with good texture, such systems have their own problems, such as the presence of bubbles within the cementitious mixture prior to curing. The panels of the present system may simply be cast horizontally, with the air bubbles textured surface forming the interfacing surface which becomes hidden.

The present system eliminates the need for structural framing, insulation other than foam core 132, and drywall. The panels have significantly greater mass than traditional structural framing, and exhibit insulative qualities as a result of their

excellent thermal inertia. BTU loss through the panel constructed wall is actually less than for conventional construction methods (e.g., stick framing with R-13 insulation in the cavity).

Because the panel system is assembled in two layers (interior and exterior panels), the interior of the wall is accessible during construction, so that electrical conduit, other electrical components, plumbing, seismic ties, etc. can be placed within the interior of the wall. The panels are cement based, but preferably are also formed to be able to be cut, sanded, drilled, screwed, and shaped with common woodworking tools. This allows the material of the panel on the interfacing surface to be removed as needed to accommodate the electrical, plumbing, or other components to be included within the interior of the wall.

Because the panel system is assembled in two layers, the thickness of each individual panel can be less than would otherwise be the case while providing a desired level of strength or of insulative characteristics. For example, if the finished wall is about 3-4 inches thick (not including the thickness of foam core 132, which may vary), each panel is only about 1.5 to about 2 inches thick. When using a 3 inch foam core, the wall thickness may be about 6-7 inches. Greater foam core thickness can easily be installed, providing greater insulative value and greater strength to the resulting wall, because of the monocoque structure which includes spacing between the interior and exterior panels, as well as spacing between the panel's respective outwardly oriented shell layers.

This allows each panel to have a significantly greater surface area than would be the case if the system built the wall with only a single layer (which would then need to be 4 inches thick), all while meeting given weight characteristics. For example, where each panel weighs no more than about 150 pounds so as to be easily

movable by hand by two workers, the surface area of such a panel is much greater where the system relies on two panels to form the thickness of the finished wall.

The assembled structure of panels may be attached together simply with screws, nails, etc., although adhesives may also be used. Once assembled, the structure of panels provides excellent transfer of racking loads, axial loads, and flexural loads.

The system provides staggering of joints between interior and exterior panels, which joints may be taped (e.g., with fiberglass mesh) and mudded, much like drywall, but preferably with a cementitious polymer modified adhesive material.

In one embodiment, no bracing is required as the system is assembled. For example, a floor panel to be in a corner may be attached to the floor joist and/or anchor plate, after which corresponding first tier interior panel(s) may be installed. The floor panel acts as a template to guide positioning and alignment of subsequently attached panels of the system. The panels thus support each other, no bracing required. One may install all interior panels prior to attaching the exterior panels, while the interfacing surfaces are thus easily accessible as needed for installation of electrical, plumbing, or other components.

The various panels may be color coded (or number or other character coded) in order to make installation of the panels even easier without skilled labor. The panels may further include a code or indication as to where the fiber layer is disposed, so as to aid in correct orientation of the panels. In some embodiments, the location of the fiber-reinforced shell layer is visibly detectable as compared to the adjacent substrate layer.

While embodiments showing two layers are shown and described, it will be understood that additional layers (e.g., a 3rd, 4th, or more) may also be provided (e.g.,

where additional insulating, ballistics, or strength performance is desired). This may be accomplished by similarly staggering the seams relative to the adjacent layer, and screwing or otherwise attaching another layer of panels to the interior or exterior, or both of the structure.

Even though the panels are cement based and generally rigid, they can be bent. For example, as shown in Figure 11A, panel 100 may include a plurality of spaced apart slots 160 formed into substrate layer 112, which allow one to bend panel 100 about the axis of slots 160. Slots 160 as shown may allow panel 100 to be bent so as to provide a concave or convex curvature to front surface 102, because of the flexibility provided by relatively thin, fiber-reinforced shell layer 110, which holds the panel together. In one embodiment, slots 160 may extend substantially the entire thickness of substrate layer 112, although in other embodiments, slots 160 may only extend through a portion of the thickness of substrate layer 112. In one embodiment, slots 160 may be spaced at whatever distance desired to achieve the desired radius curvature. For example, closer spacing may be desired where the radius of curvature is relatively smaller. Generally, the spacing may be between about 0.5 inch and about 5 inches.

It will be appreciated that although slots 160 are shown extending in a direction generally parallel to the 3 foot dimension of panel 100, where it is desired to bend panel 100 in a different plane, the slots may be differently oriented. For example, slots 160 may extend in a direction generally parallel to the 5 foot dimension of panel 100 of Figure 11A. In another embodiment, the slots may extend diagonally.

Slots 160 may be formed by simply cutting (e.g., using a typical skill saw, table saw, or other wood working saw with conventional blades). Alternatively, slots

160 may be molded into substrate layer 112 of panel 100 during manufacture of panel 100.

The terms interior, exterior have been used herein rather broadly, with respect to a given floor space, and not necessarily relative to an exterior of the entire structure (e.g., where forming an interior wall of two layers, both layers are within the building structure, although one layer is "interior" and another is "exterior" relative to a given room or floor space. Similar considerations apply to the terms top and bottom as used herein.

Strength characteristics for dual panel thickness wall constructions including 1.75 inch thick panels and 3 inch, 6 inch, and 9 inch foam cores were determined through testing procedures in accordance with ASTM E72-10. The testing results are presented in Tables 1-3 below.

TABLE 1 - WALL - ALLOWABLE AXIAL LOAD				
WALL HEIGHT		WALL THICKNESS		
		6 3/4"	9 3/4"	12 3/4"
In plane deflection <		0.125"	0.125"	0.125"
AXIAL LOAD (plf)	8' - 0"	6200[1]	6200[1]	6200[1]
	10' - 0"	6200[1]	6200[1]	6200[1]
	12' - 0"	5600	5750	5750
	14' - 0"	4800	4900	4900

TABLE 2 - WALL - ALLOWABLE SHEAR LOAD				
	WALL HEIGHT	WALL THICKNESS		
		6 3/4"	9 3/4"	12 3/4"
SHEAR LOAD (plf)	N/A	830[1]	830[1]	830[1]
Avg. Strain deformation of 8'-0" wall @ loads shown above				0.33"

(1) Limited to ultimate tested mean load divided by a factor of safety of three.

TABLE 3 - ALLOWABLE TRANSVERSE LOAD							
PANEL HEIGHT		WALL THICKNESS					
		6 3/4"			9 3/4"		
DEFLECTION		L/360	L/240	L/180	L/360	L/240	L/180
TRANSVERSE LOAD (PSF)	8' - 0"	66[1]	66[1]	66[1]	96[1]	96[1]	96[1]
	10' - 0"	52[1]	52[1]	52[1]	75[1]	75[1]	75[1]
	12' - 0"	42[1]	42[1]	42[1]	61[1]	61[1]	61[1]
	14' - 0"	36[1]	36[1]	36[1]	52[1]	52[1]	52[1]

(1) Limited to the ultimate failure load divided by a safety factor of three.

It will also be appreciated that the present claimed invention may be embodied in other specific forms without departing from its spirit or essential characteristics. The described embodiments are to be considered in all respects only as illustrative, not restrictive. The scope of the invention is, therefore, indicated by the appended claims rather than by the foregoing description. All changes that come within the meaning and range of equivalency of the claims are to be embraced within their scope. Additionally, as used in this specification and the appended claims, the singular forms "a," "an" and "the" include plural referents unless the context clearly dictates otherwise.

What is claimed is:

CLAIMS

1. A light-weight modular panel system comprising a plurality of light-weight modular panels to be attached to one another, each panel comprising:

a cementitious material including a front surface, a back surface, and edge surfaces between the front and back surfaces, wherein the panel includes a cementitious shell layer and a cementitious substrate layer adjacent to one another,

the shell layer comprising a light-weight aggregate and reinforcing fibers dispersed and bonded in a cementitious matrix, the shell layer having a first aggregate to cement ratio;

the substrate layer comprising a light-weight aggregate dispersed and bonded in a cementitious matrix, the substrate layer being substantially void of reinforcing fibers, the substrate layer having a second aggregate to cement ratio that differs from the first aggregate to cement ratio of the shell layer;

wherein the light-weight aggregate has a density of not more than about 30 lbs/ft^3 and provides the resulting cementitious material of the panel with the ability to be cut, sanded, drilled, screwed, and shaped with common woodworking tools.

2. A light-weight modular panel system as recited in claim 1, wherein each panel includes no cellulose based materials.

3. A light-weight modular panel system as recited in claim 1, wherein each panel has a thickness from about 1.5 inches to about 2 inches and is sized to weigh no more than about 150 pounds so as to be easily manipulated by two workmen.

4. A light-weight modular panel system as recited in claim 1, wherein the shell layer provides the front surface and the substrate layer provides the back surface, the front surface provided by the shell layer being a finished surface such that no additional surface finishing is required.

5. A light-weight modular panel system as recited in claim 1, wherein the light-weight aggregate has a density from about 5 lbs/ft^3 to about 15 lbs/ft^3.

6. A light-weight modular panel system as recited in claim 1, wherein the light-weight aggregate is silica based and the cementitious material from which the panels are formed is substantially void of sand.

7. A light-weight modular panel system as recited in claim 1, wherein a density of the panel is from about 50 lbs/ft^3 to about 65 lbs/ft^3.

8. A light-weight modular panel system as recited in claim 1, wherein at least one panel comprises a plurality of spaced apart slots formed the substrate layer to allow the panel to bend.

9. A light-weight modular panel wall construction system comprising:

an interior panel including an exposed interior surface, an opposite interfacing surface for interfacing with an exterior panel or a material sandwiched between the interior panel and an exterior panel when the panel system is assembled, and edge surfaces between the interior and interfacing surfaces;

an exterior panel including an exposed exterior surface, an opposite interfacing surface for interfacing with the interior panel or a material sandwiched between the interior panel and the exterior panel when the panel system is assembled, and edge surfaces between the exterior and interfacing surfaces;

wherein each panel comprises a cementitious material including:

a shell layer providing a respective interior or exterior surface, the shell layer comprising a light-weight aggregate and reinforcing fibers dispersed and bonded in a cementitious matrix; and

a substrate layer adjacent the shell layer and providing the interfacing surface, the substrate layer comprising a light-weight aggregate dispersed and bonded in a cementitious matrix, the substrate layer being substantially void of reinforcing fibers;

wherein a plurality of the interior panels are directly or indirectly attached to a plurality of the exterior panels to form a wall system where interfacing surfaces of respective panels are oriented towards one another in a manner such that seams defined between adjacent edges of the interior and exterior panels are staggered when the panel system is assembled.

10. A light-weight modular panel wall construction system as recited in claim 9, wherein the wall system provides a strength that is greater than a strength of any individual panel within the wall system.

11. A light-weight modular panel wall construction system as recited in claim 9, wherein the light-weight aggregate has a density of not more than about 25 lbs/ft^3 and provides the resulting cementitious material of the panel with the ability to be cut, sanded, drilled, screwed, and shaped with common woodworking tools.

12. A light-weight modular panel wall construction system as recited in claim 11, wherein the interfacing surfaces of one or more of the interior or exterior panels are shaped with common woodworking tools to receive one or more of electrical conduit, electrical wiring, plumbing, seismic tie downs, or other internal wall components.

13. A light-weight modular panel wall construction system as recited in claim 9, further comprising a foam core sandwiched between the interior panels and the exterior panels of the wall system.

14. A light-weight modular panel wall construction system as recited in claim 13, wherein portions of the foam core are removed to provide space for one or more of electrical conduit, electrical wiring, plumbing, seismic tie downs, or other internal wall components.

15. A light-weight modular panel wall construction system as recited in claim 9, wherein each interior and exterior panel has a thickness from about 1.5 inches to about 2 inches, and any foam core sandwiched between the interior panels and the exterior panels has a thickness of up to about 9 inches so that the wall system formed by interfacing interior panels with exterior panels separated by an optional foam core has a thickness of about 3 inches to about 13 inches.

16. A light-weight modular panel wall construction system as recited in claim 9, wherein the exposed exterior surface of each exterior panel and the exposed interior surface of each interior panel includes a finished surface such that no additional surface finishing is required.

17. A wall system constructed from a plurality of light-weight modular panels, the wall system comprising:

a plurality of interior panels, each including an exposed interior surface, an opposite interfacing surface for interfacing with an exterior panel or a material sandwiched between the interior panel and an exterior panel, and edge surfaces between the interior and interfacing surfaces;

a plurality of exterior panels, each including an exposed exterior surface, an opposite interfacing surface for interfacing with the interior panel

or a material sandwiched between the interior panel and the exterior panel, and edge surfaces between the exterior and interfacing surfaces;

wherein each panel comprises a cementitious material including:

a shell layer providing a respective interior or exterior surface, the shell layer comprising a light-weight aggregate and reinforcing fibers dispersed and bonded in a cementitious matrix; and

a substrate layer adjacent the shell layer and providing the interfacing surface, the substrate layer comprising a light-weight aggregate dispersed and bonded in a cementitious matrix, the substrate layer being substantially void of reinforcing fibers;

wherein the plurality of interior panels are directly or indirectly attached to the plurality of exterior panels to form a wall system where interfacing surfaces of respective panels are oriented towards one another in a manner such that seams defined between adjacent edges of the interior and exterior panels are staggered.

18. A wall system constructed from a plurality of light-weight modular panels as recited in claim 17, wherein seams between adjacent interior panels and seams between adjacent exterior panels are spanned with a fiberglass mesh bonded to the respective panels with a polymer modified cement based adhesive so that the wall system provides a strength that is greater than a strength of any individual panel within the wall system.

19. A light-weight modular panel wall construction system as recited in claim 17, wherein the light-weight aggregate has a density of not more than about 25 lbs/ft^3 and provides the resulting cementitious material of the panel with the ability to be cut, sanded, drilled, screwed, and shaped with common woodworking tools.

20. A light-weight modular panel wall construction system as recited in claim 17, further comprising a foam core sandwiched between the interior panels and the exterior panels of the wall system.

21. A light-weight modular panel wall construction system as recited in claim 20, wherein portions of the foam core are removed to provide space for one or more of electrical conduit, electrical wiring, plumbing, seismic tie downs, or other internal wall components.

22. A light-weight modular panel wall construction system as recited in claim 20, wherein each interior and exterior panel has a thickness from about 1.5 inches to about 2 inches, and the foam core sandwiched between the interior panels and the exterior panels has a thickness of about 3 inches so that the wall system formed by interfacing interior panels with exterior panels separated by the foam core has a thickness of about 6 inches to about 7 inches.

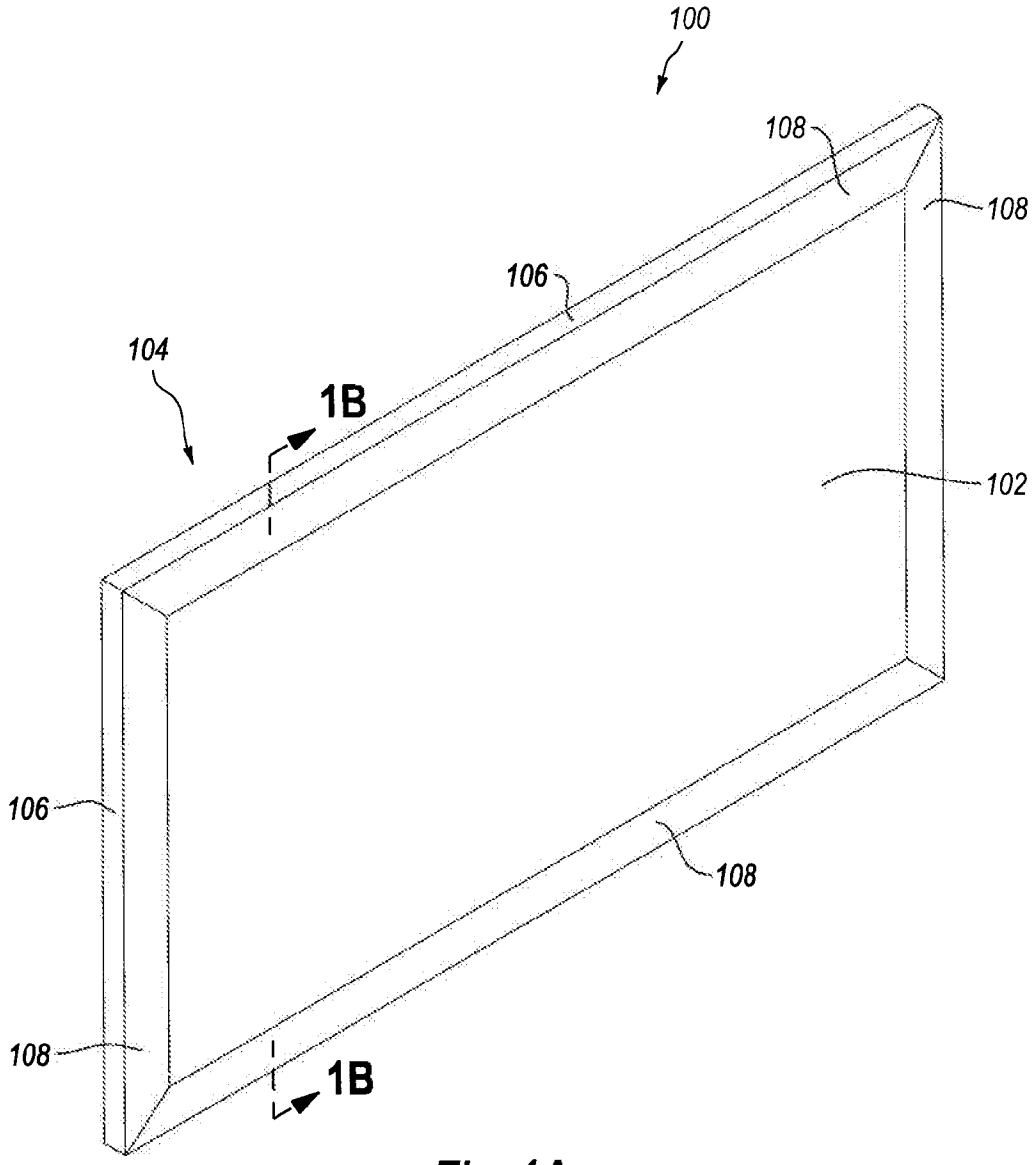

Fig. 1A

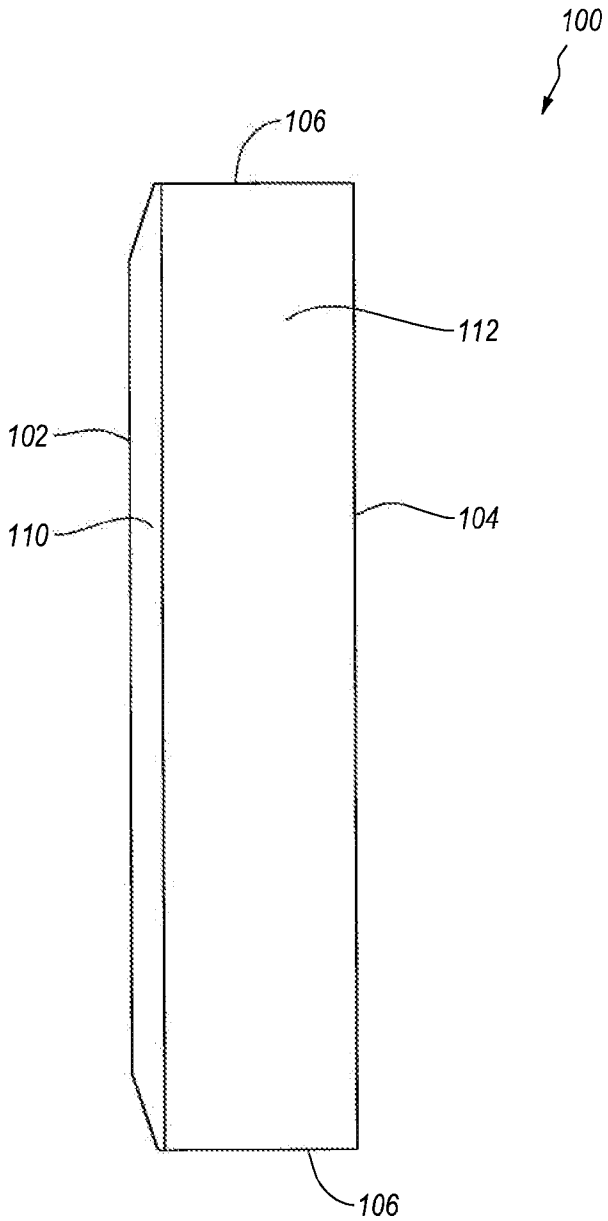

Fig. 1B

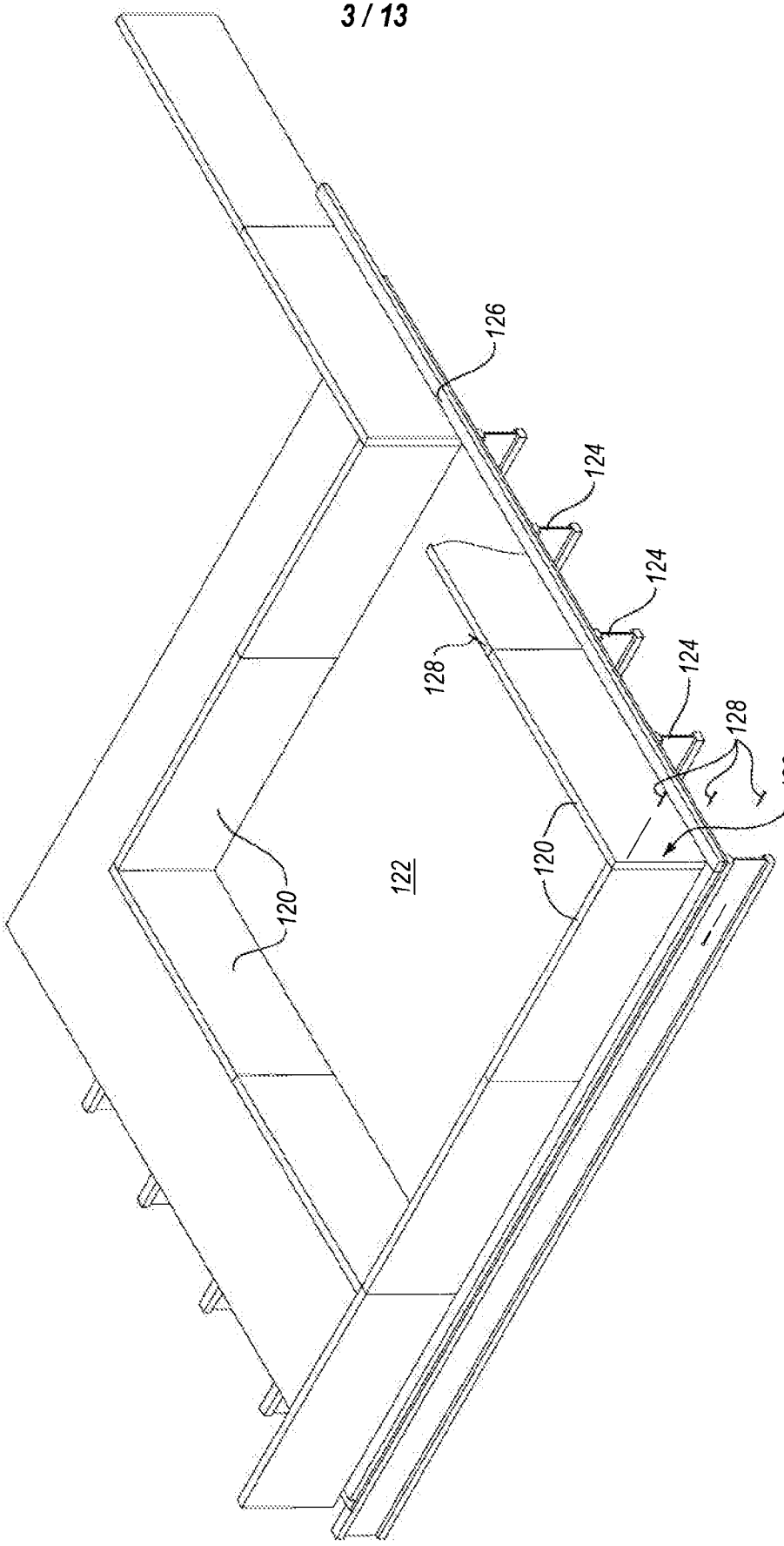

Fig. 2

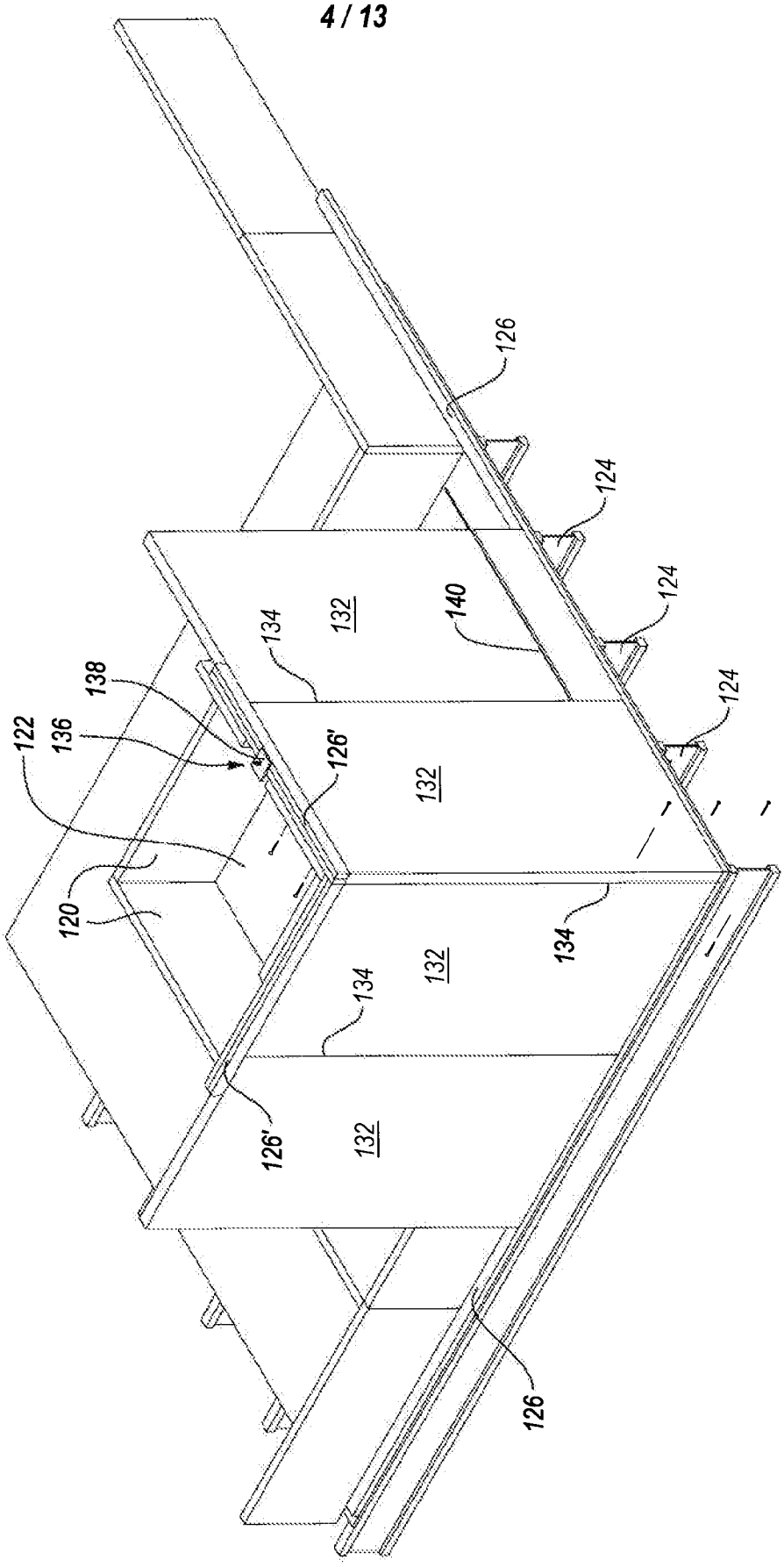
126
124
124
124
140
132
134
138
136
122
126'
132
120
134
132
134
126'
132
126

Fig. 3

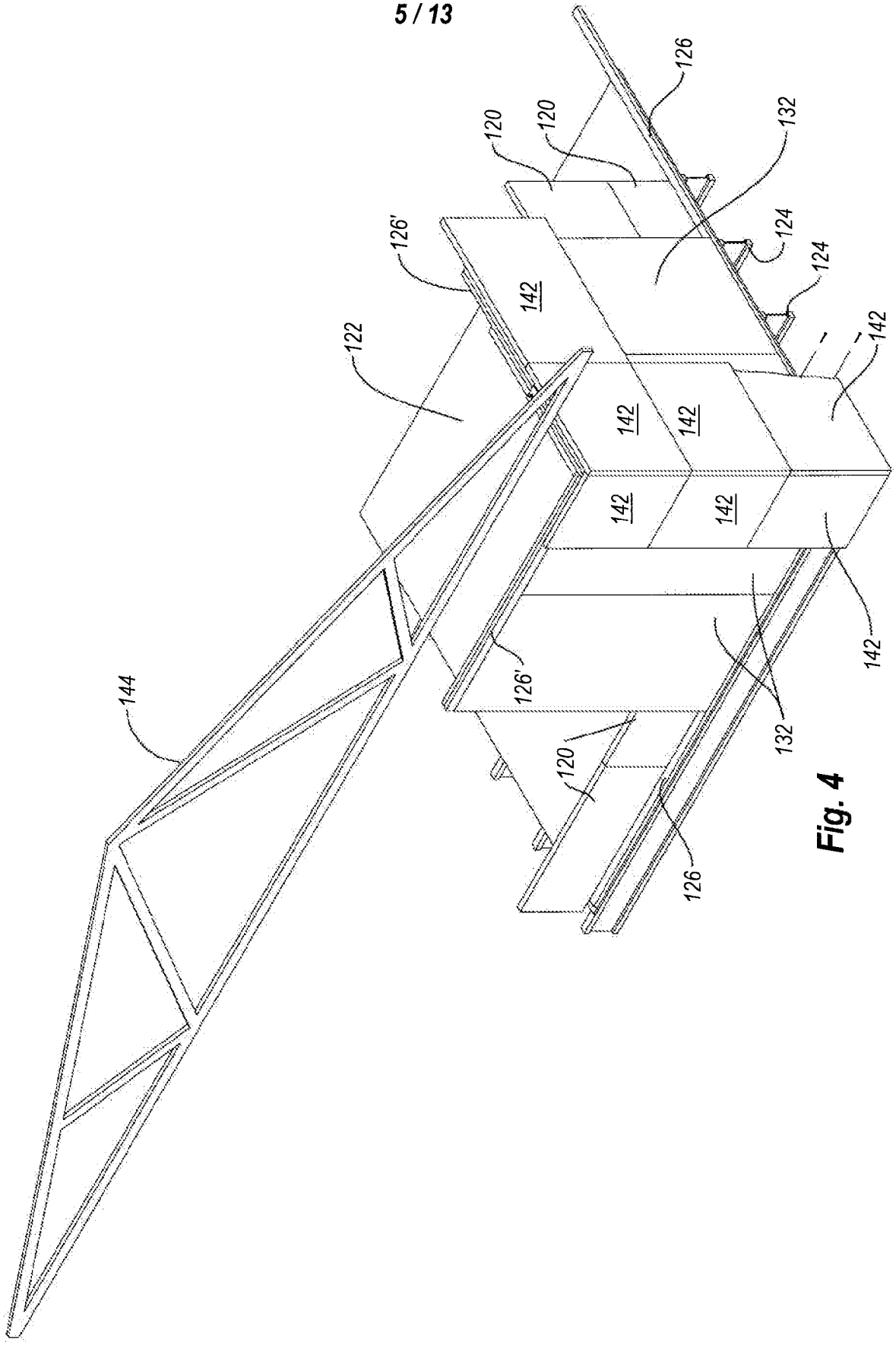
126
120
120
132
126'
124
124
142
142
122
142
142
142
142
142
144
126'
132
120
126

Fig. 4

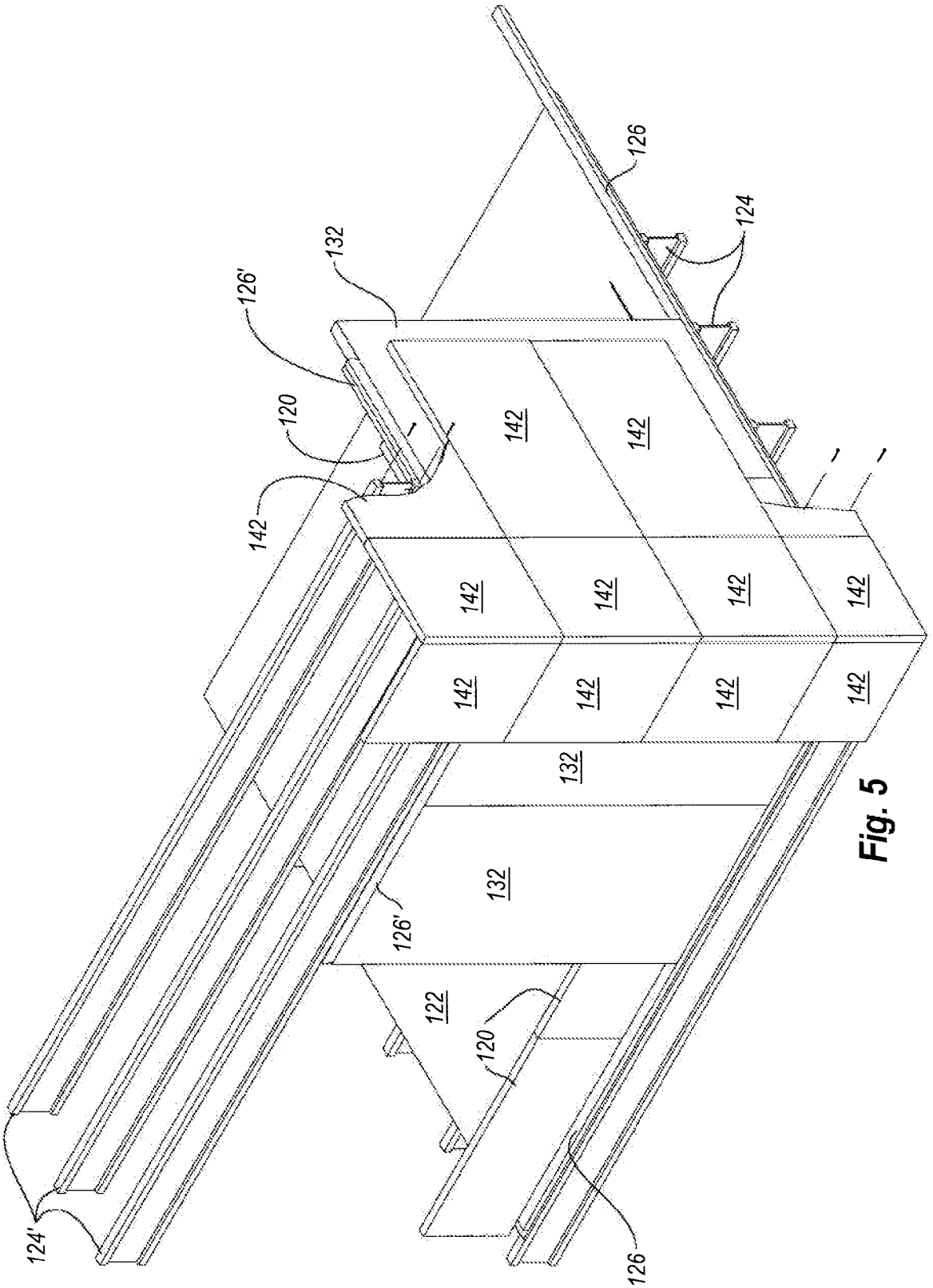
126
124
132
126'
120
142
142
142
142
142
142
142
142
142
142
142
132
132
126'
122
120
124'
126

Fig. 5

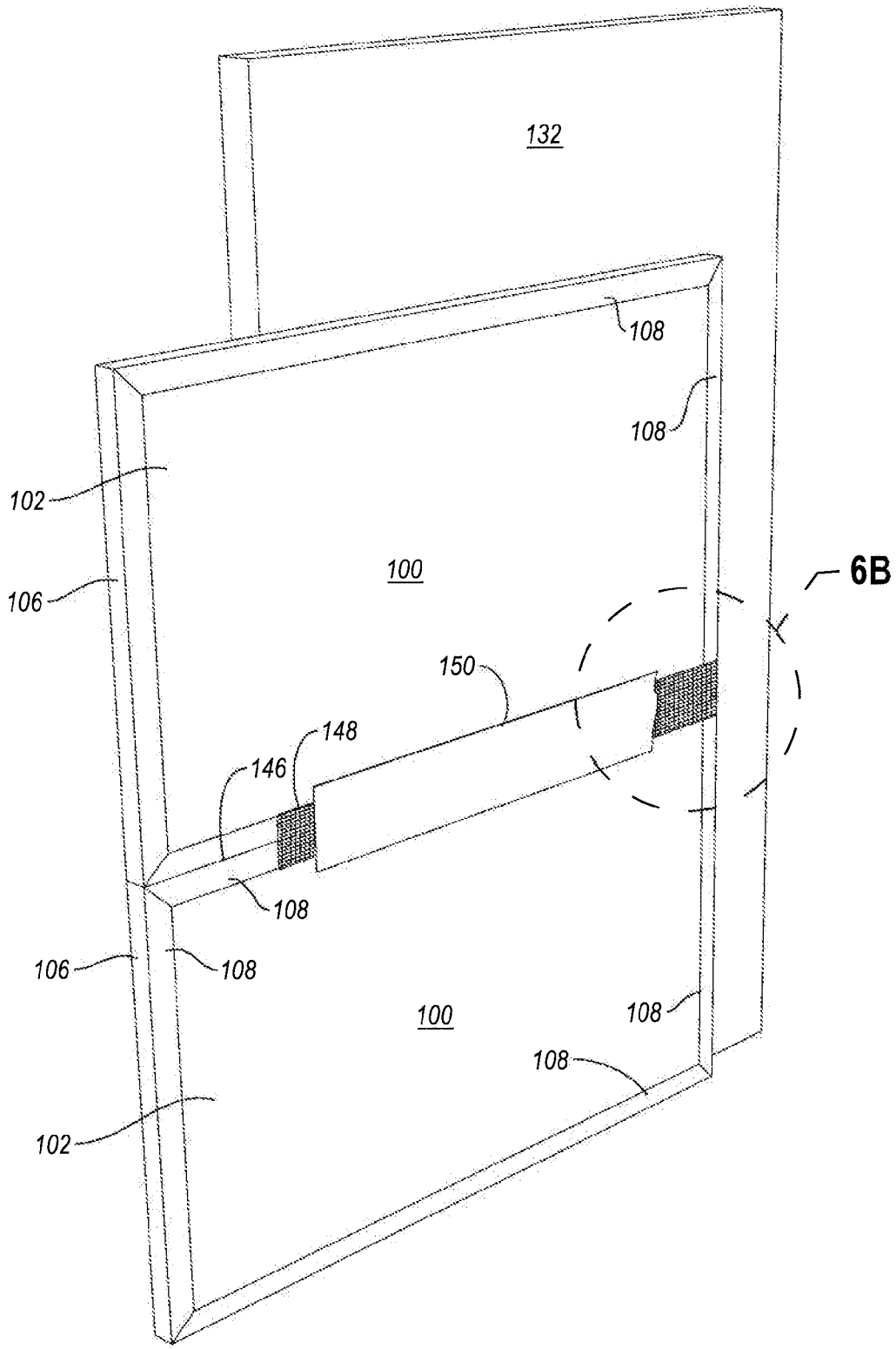
132
108
108
102
100
6B
106
150
148
146
108
106
108
100
108
108
102

Fig. 6A

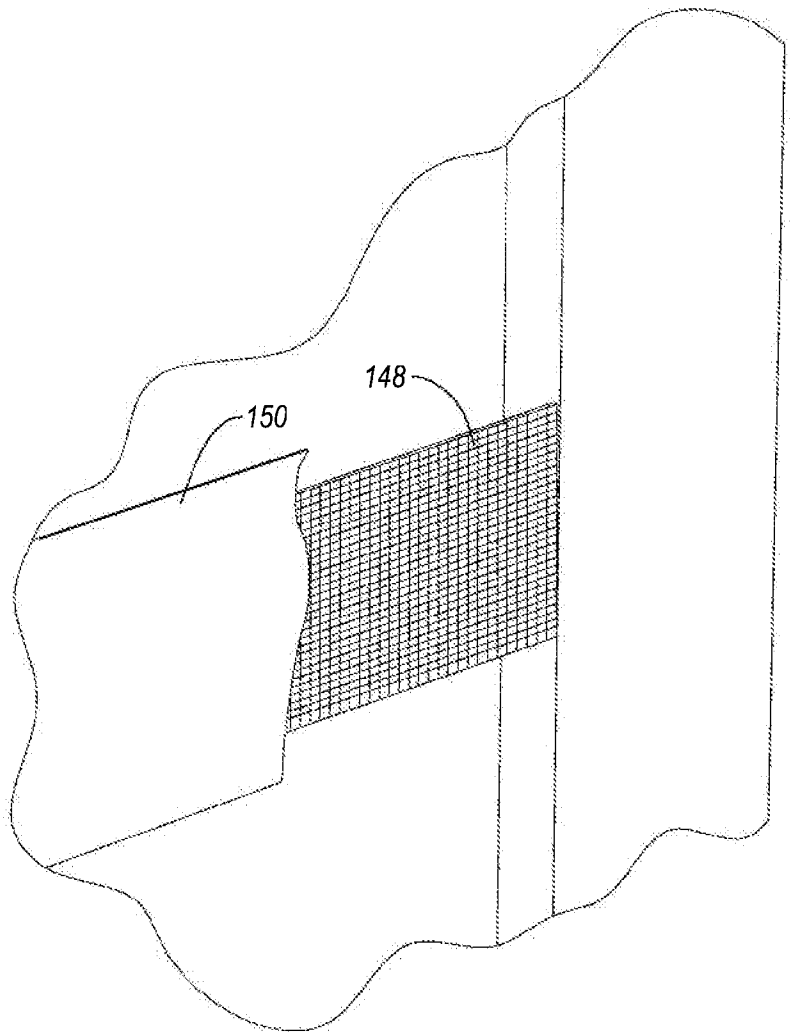

Fig. 6B

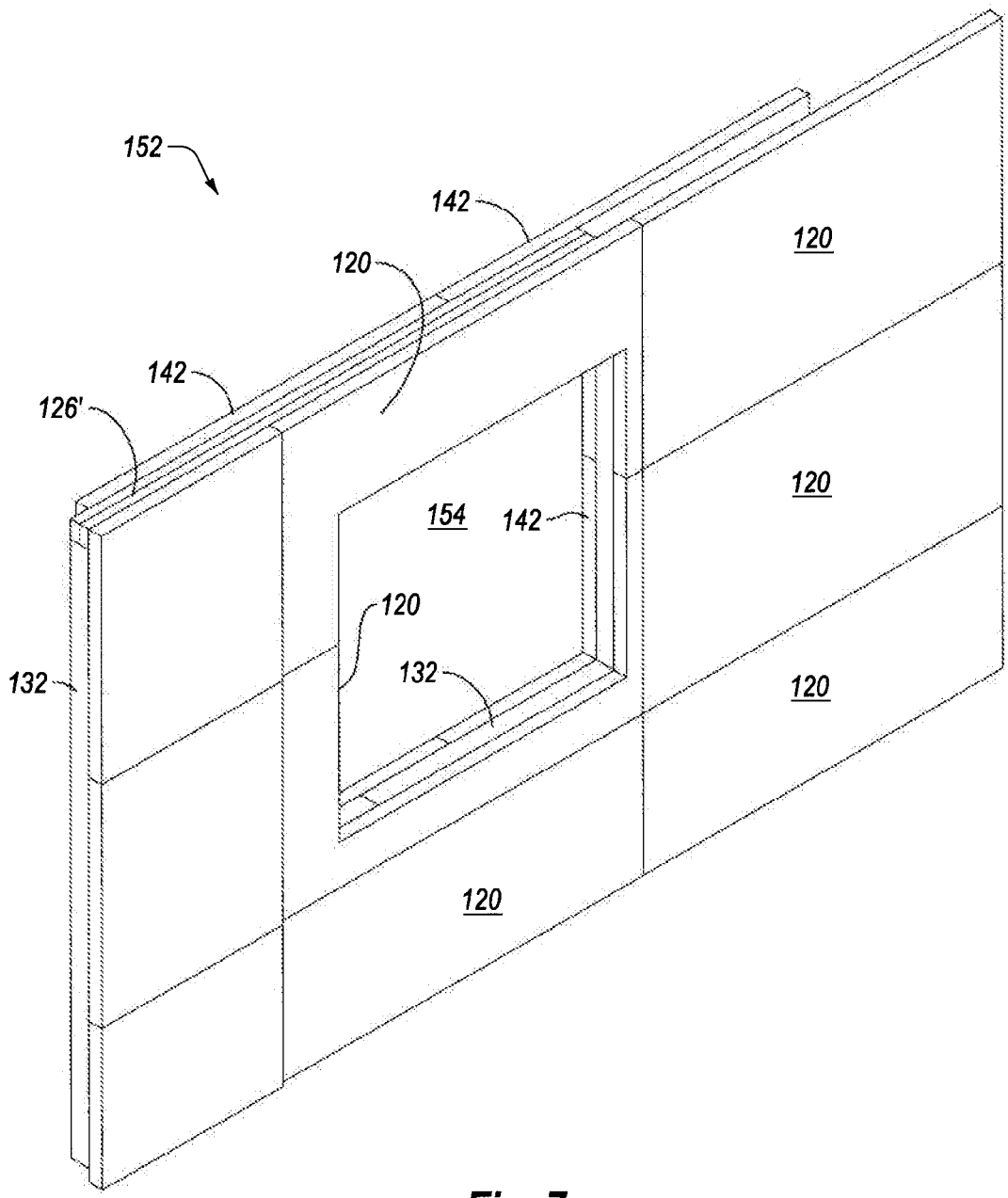

Fig. 7

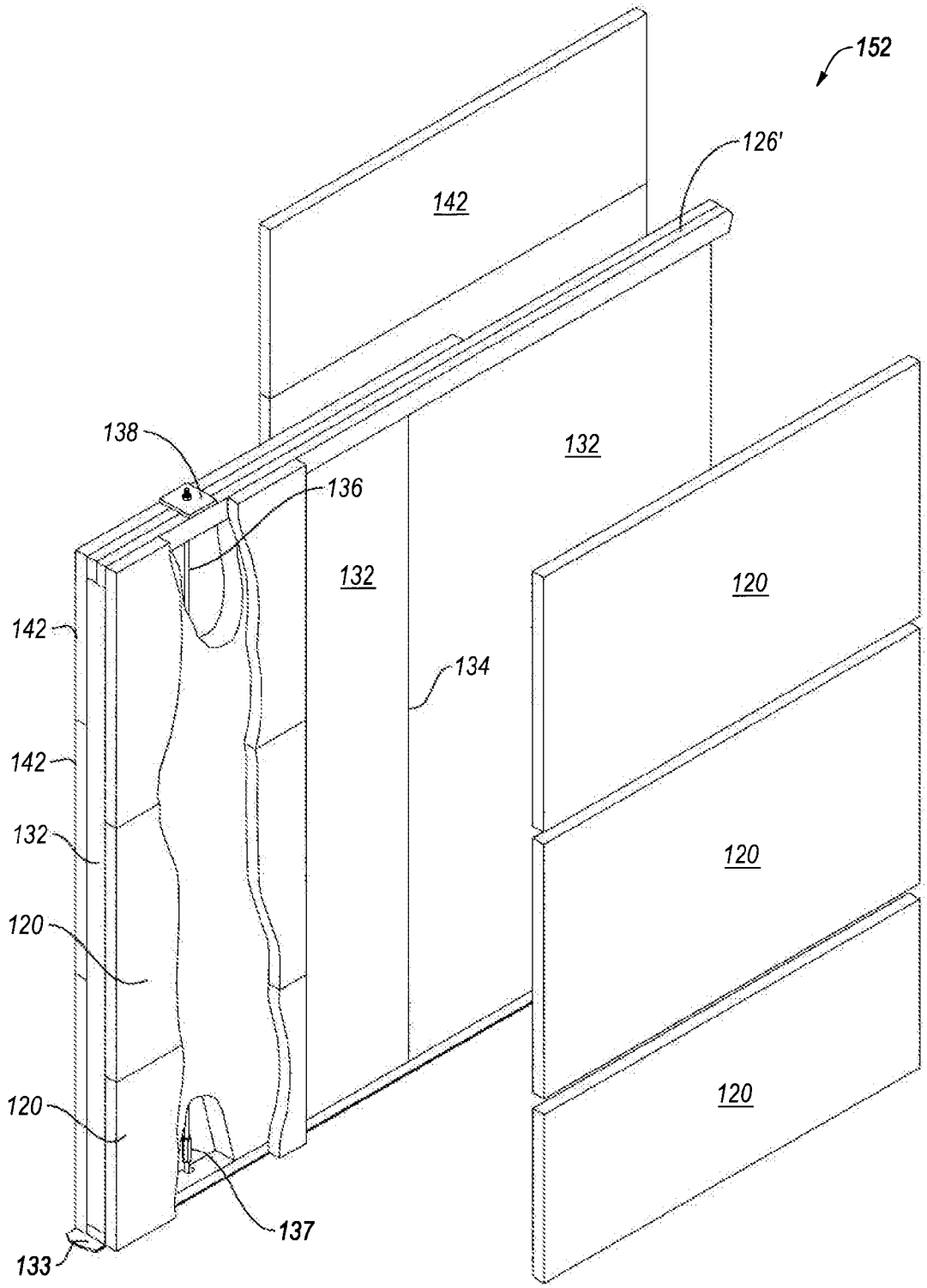
152
126'
142
138
136
132
132
120
142
134
142
132
120
120
120
120
137
133

Fig. 8

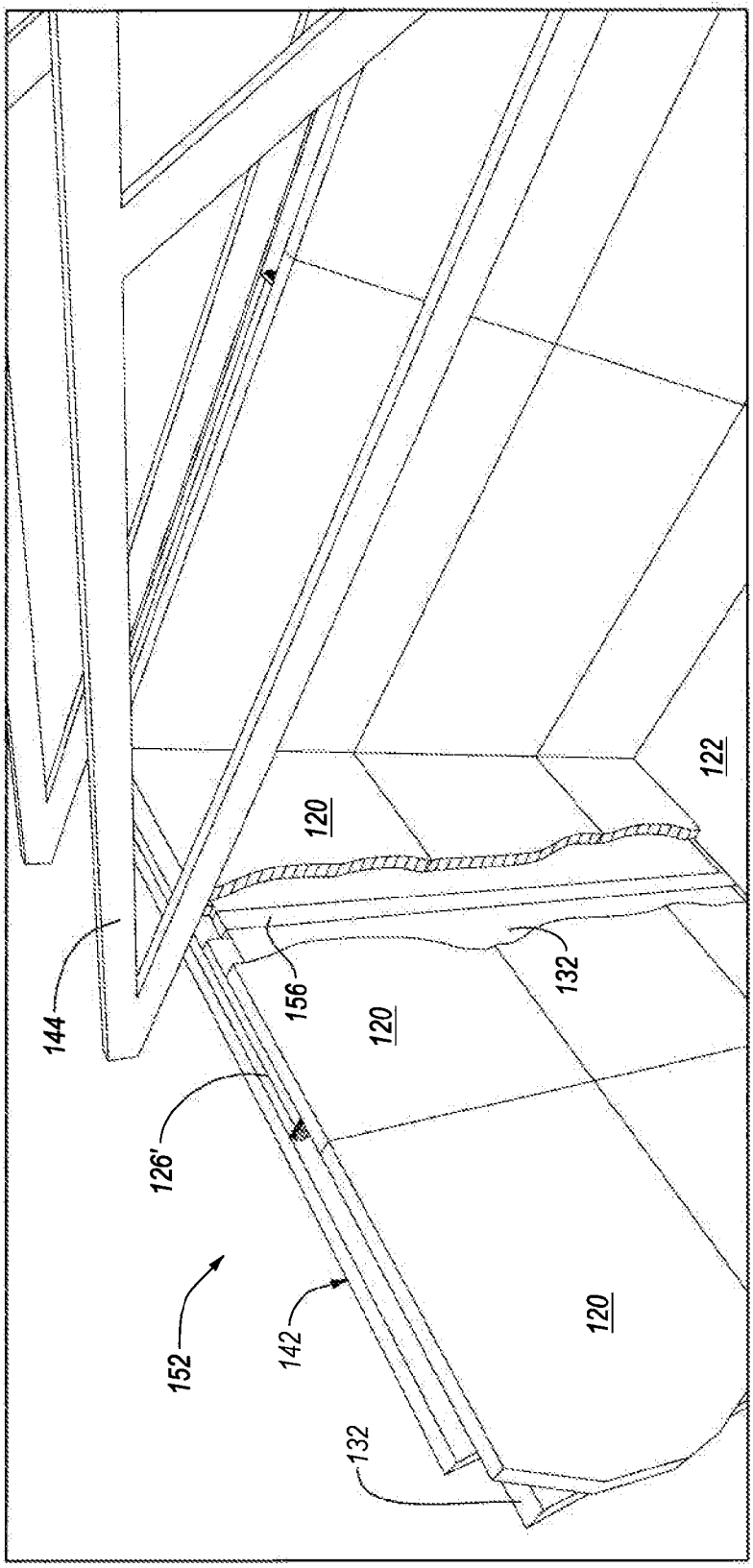

Fig. 9

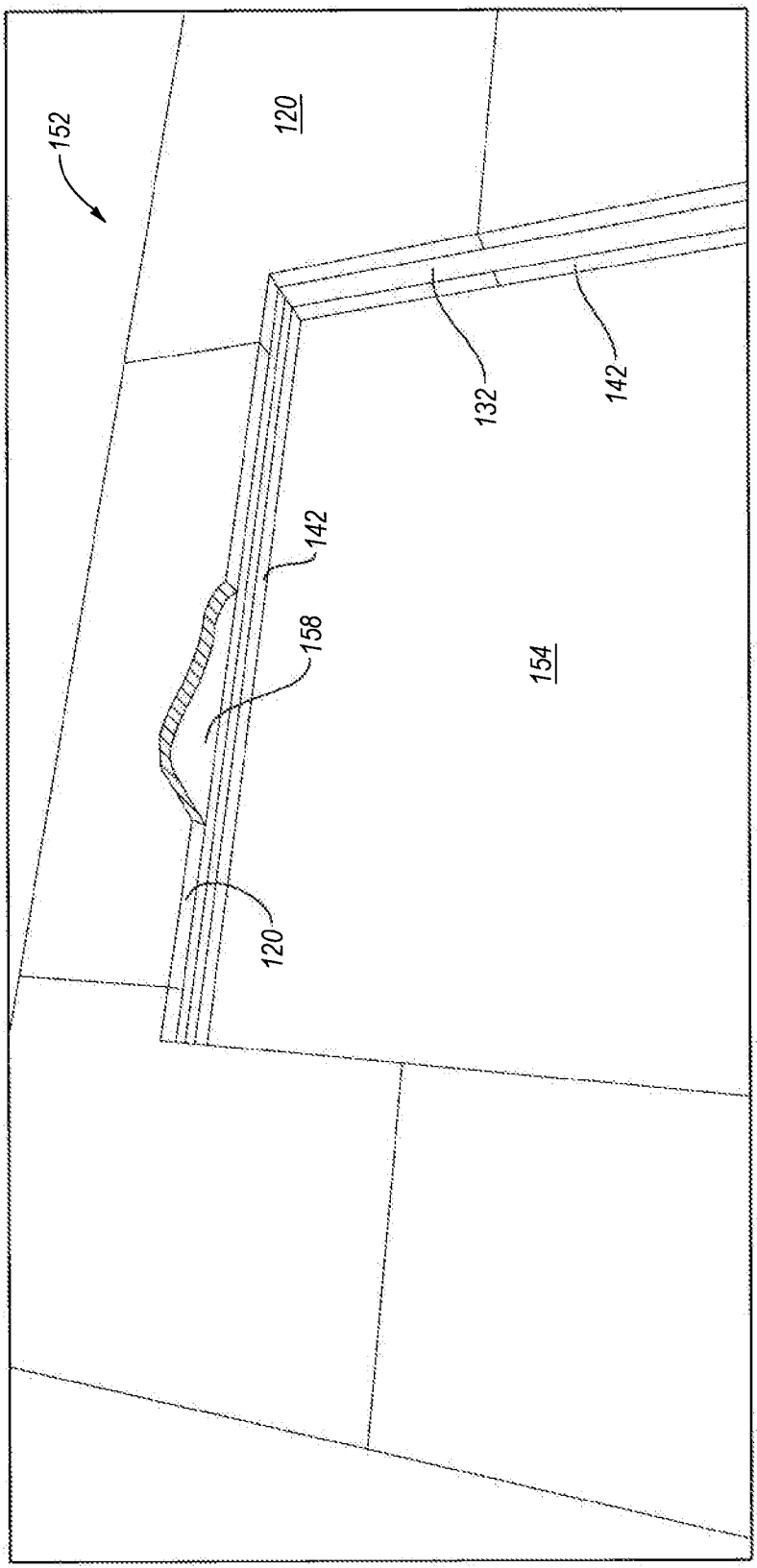

Fig. 10

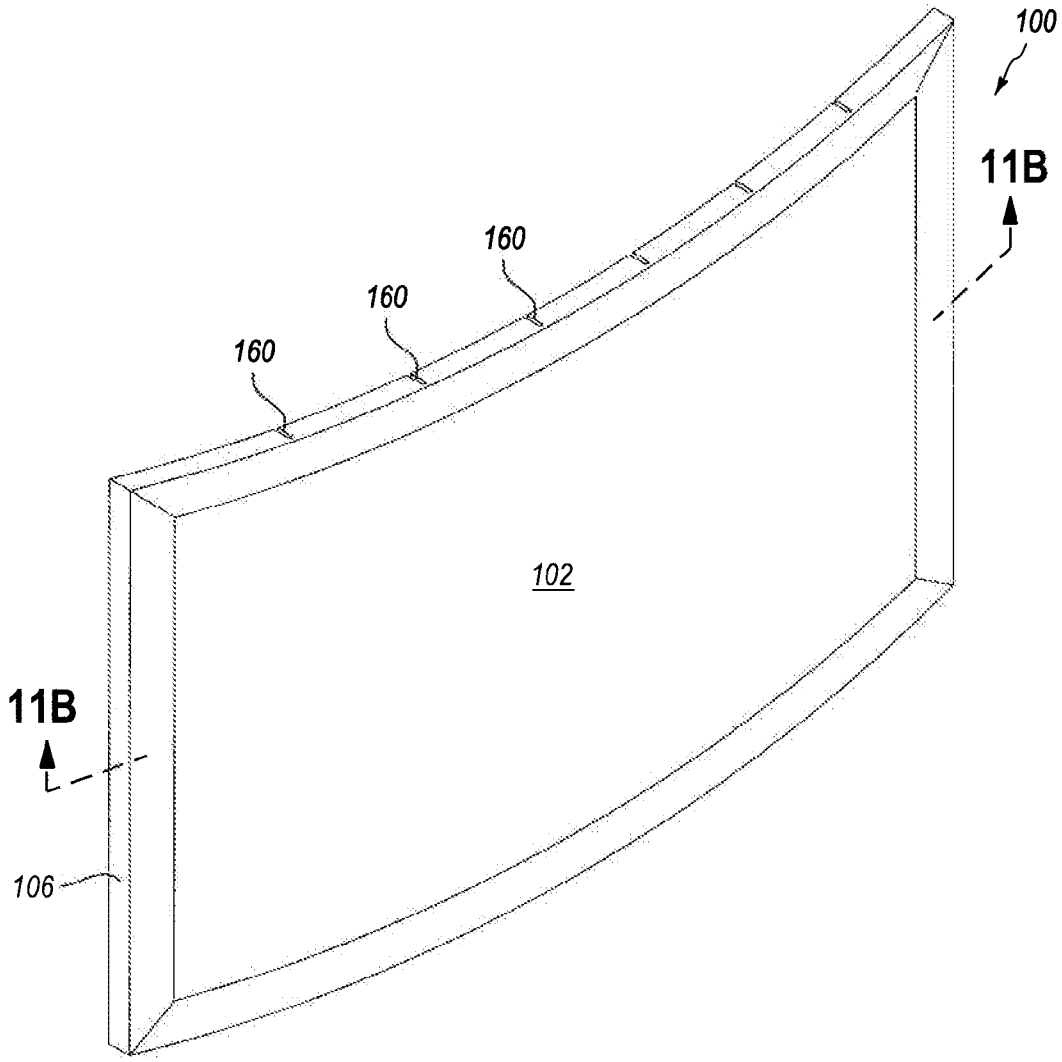

Fig. 11A

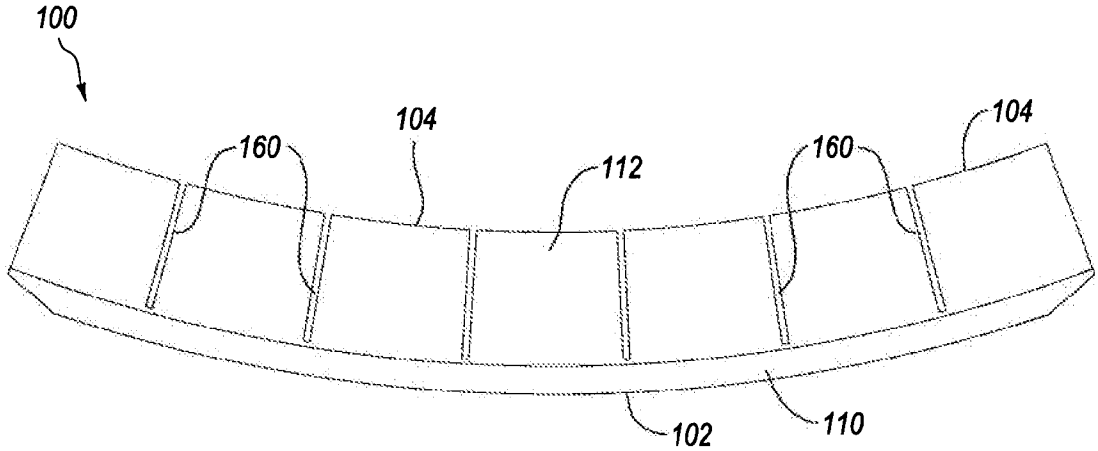

Fig. 11B