(No Model.)

3 Sheets—Sheet 1.

D. AIKMAN.

CENTRIFUGAL DRIER.

No. 587,292. Patented Aug. 3, 1897.

Fig. 1.

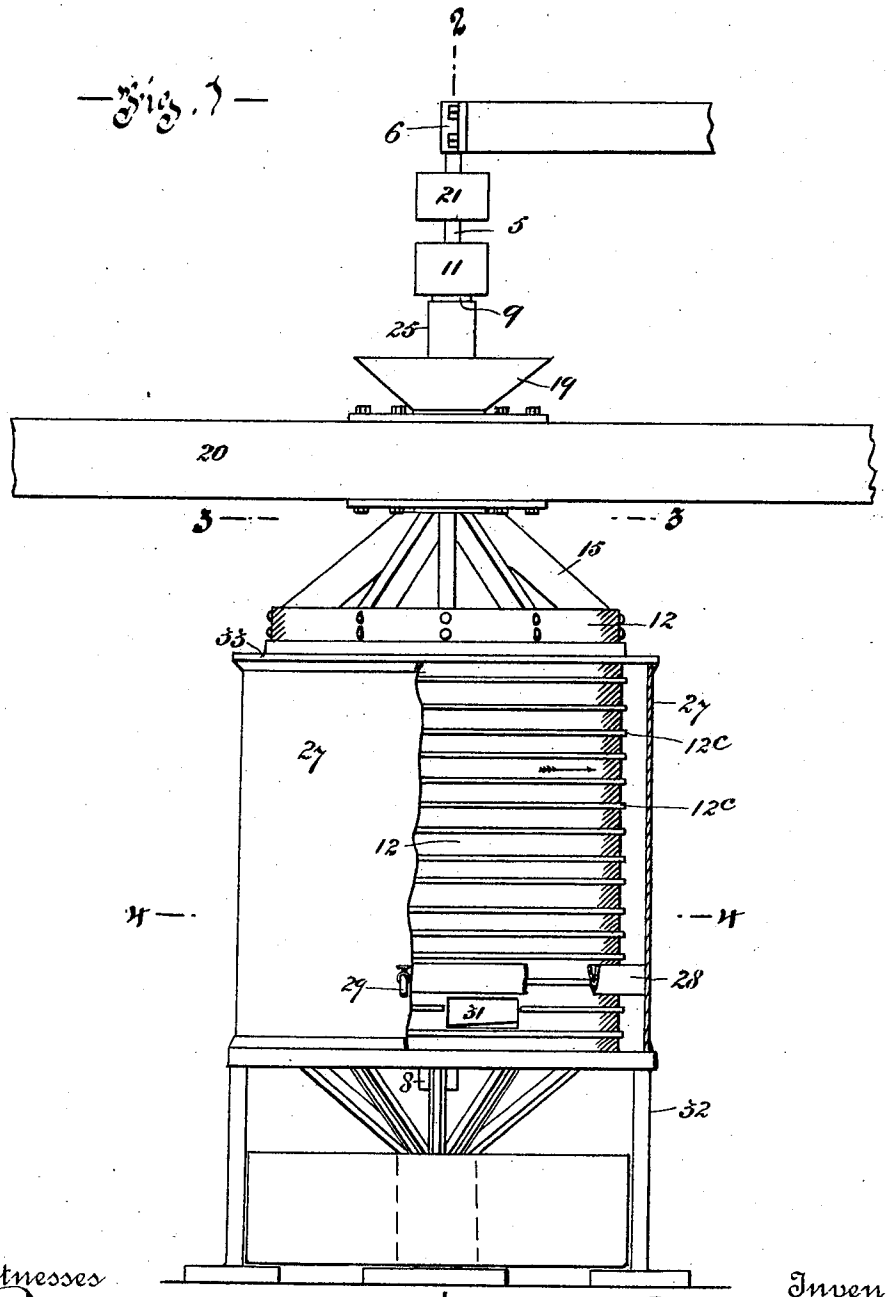

Witnesses

Robt. F. McLeod

Robt. C. Kimber

Inventor

David Aikman

By Leo Attorney

Otis N. Shaw

THE NORRIS PETERS CO., PHOTO-LITHO., WASHINGTON, D. C.

(No Model.) 3 Sheets—Sheet 2.

D. AIKMAN.

CENTRIFUGAL DRIER.

No. 587,292. Patented Aug. 3, 1897.

—Fig. 2—

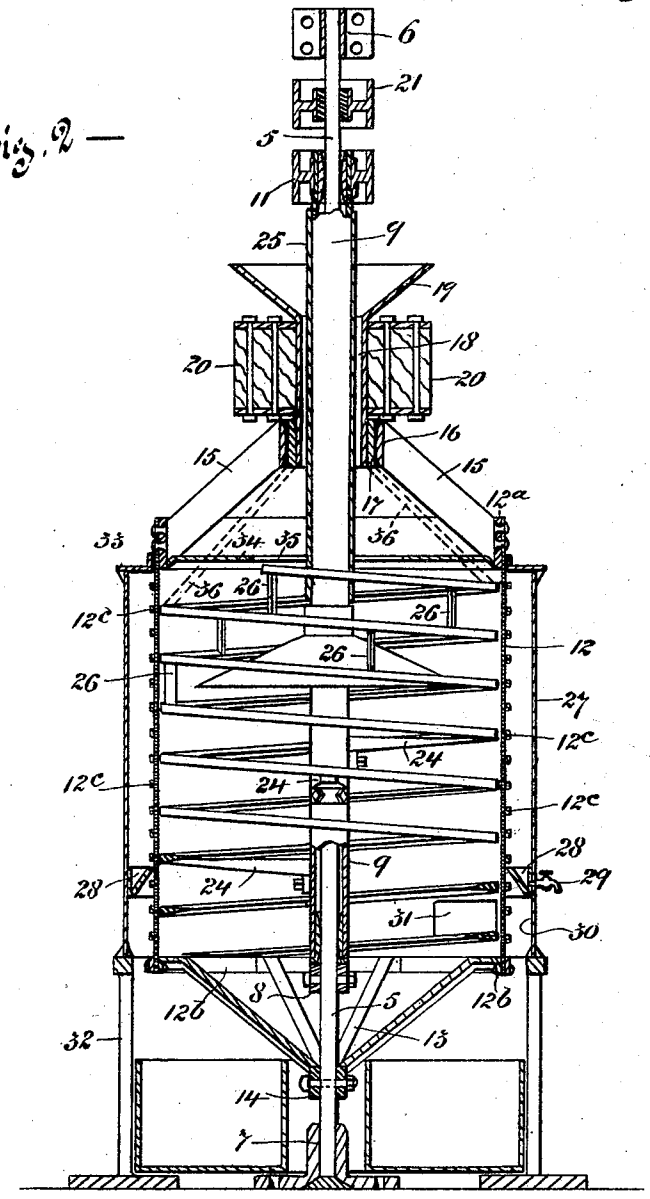

Witnesses

Fred P. McFeat

Rupert C. Kimber

Inventor

David Aikman

By his Attorney

Wm N. Evans

THE NORRIS PETERS CO., PHOTO-LITHO., WASHINGTON, D. C.

(No Model.) 3 Sheets—Sheet 3.

D. AIKMAN.

CENTRIFUGAL DRIER.

No. 587,292. Patented Aug. 3, 1897.

— Fig. 3 —

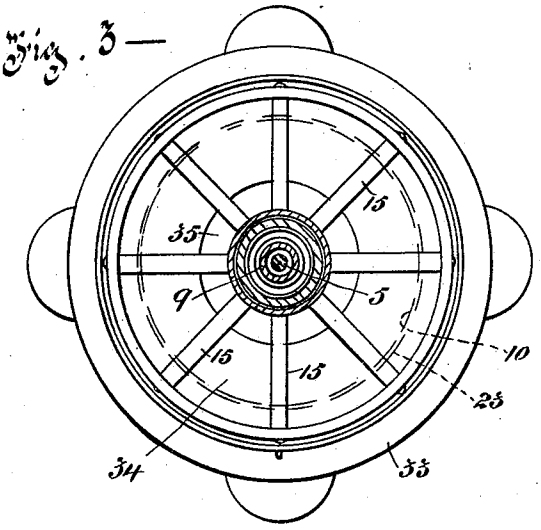

— Fig. 4 —

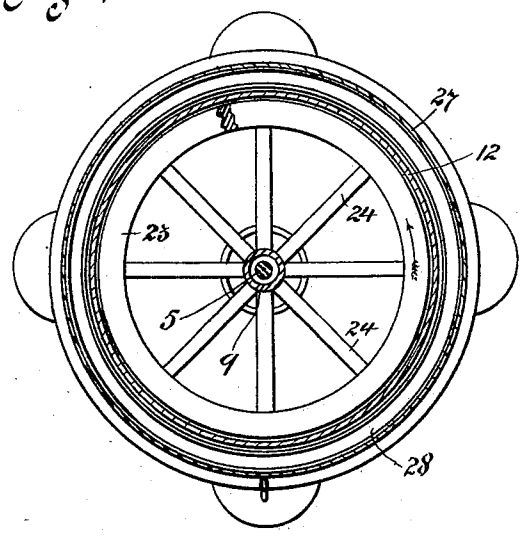

Witnesses

Inventor

David Aikman

By his Attorney

THE NORRIS PETERS CO., PHOTO-LITHO., WASHINGTON, D. C.

UNITED STATES PATENT OFFICE.

DAVID AIKMAN, OF ST. LAMBERT, CANADA, ASSIGNOR OF TWO-FIFTHS TO THEODORE DOUCET, OF MONTREAL, CANADA.

CENTRIFUGAL DRIER.

SPECIFICATION forming part of Letters Patent No. 587,292, dated August 3, 1897.

Application filed August 16, 1895. Serial No. 559,481. (No model.)

To all whom it may concern:

Be it known that I, DAVID AIKMAN, of St. Lambert, in the county of Chambly and Province of Quebec, Canada, have invented certain new and useful Improvements in Driers; and I do hereby declare that the following is a full, clear, and exact description of the same.

This invention has for its object to provide a drier capable of applying centrifugal force in the separation of the water or other liquid from moist fibrous and granular substances, such as peat, wood-pulp, sugar, and the like; and to such end the invention consists in the combination of an inner rotating distributer upon which the substance is fed and an arrester in the form of a sieve or perforated cage surrounding the receiver against which the substance is forcibly thrown, thus causing the liquid contained therein to be ejected through the sieve or cage and the dried mass either allowed to drop from the sieve or cage or, as I consider preferable, the sieve or cage be also caused to rotate, thus securing an additional centrifugal pressure upon the moist substance. In the latter case it will be desirable to provide a conductor to remove the dried mass from the rotating sieve, as it will have a tendency to adhere thereto, and I prefer to do this by means of a helix located in close proximity to the inside surface of the sieve, and this helix can also be made rotatable either in the same direction as but faster than the sieve, when it will remove the dried mass from the sieve very slowly, or the operation of removing the mass from the sieve can be increased in speed by making the helix stationary and the speed still more increased by rotating the helix in an opposite direction to that in which the sieve travels.

When a rotating arrester or sieve is used, the ejected liquid will be scattered in all directions, and to obviate this I prefer to inclose the sieve by a cylindrical wall, against which the liquid will be thrown and then run down it into a trough near the base thereof, the substance being dried being conducted by means of the helix downward to an opening in the sieve below the trough, where it will be discharged, preferably, also against the cylindrical wall, from which it will drop into any suitable receptacle.

For full comprehension, however, of my invention reference must be had to the annexed drawings, forming a part of this specification, in which like symbols indicate corresponding parts, and wherein—

Figure 1 is a side elevation, partly in section, of my improved drier; Fig. 2, a transverse vertical sectional view taken on line 2 2, Fig. 1; Fig. 3, a transverse horizontal sectional view taken on line 3 3, Fig. 1; Fig. 4, a similar view taken on line 4 4, Fig. 1.

A vertical shaft 5 is carried loosely at its upper and lower ends in conveniently-mounted bearings 6 and 7, and upon this shaft, a short distance from the bottom thereof, is secured a collar 8, which freely supports a sleeve or hollow shaft 9, which encircles shaft 5 and extends almost to the top thereof.

A distributer in the form of a conically-shaped plate 10 is rigidly secured to the hollow shaft 9 about midway of its length, and a pulley 11 is secured to the upper end thereof. A circular sieve or cage 12, preferably made of perforated sheet-copper, strengthened by rings 12^a and 12^b, secured thereto at its top and bottom ends, respectively, and by a series of narrow bands 12^c, encircling it between the rings 12^a and 12^b. This sieve or cage is supported at its lower end by braces 13, connected to ring 12^b and formed integral with a collar 14, rigidly secured near the lower end of the vertical shaft 5 and supported at its upper end by braces 15, connected to ring 12^a and formed integral with a ring 16, which freely encircles and bears lightly upon a bearing-ring 17, carried by the lower end of a feed-conduit 18 from a stationary hopper 19, supported, as indicated, by beams 20 or in any other suitable manner, the hopper and conduit being preferably located so as to encircle the shaft 9, in order that the substance to be dried may be fed to a point as near the center of the distributer 10 as possible.

If the cone 10 be rotated, it will throw any substance that may be dropped upon it (from hopper 19, through conduit 18, or in any other manner) against the sieve 12 with a force according to the rate of speed at which such

distributer travels, and if it be desired to only partially dry the substance the result will be accomplished by this simple operation, the partially-dried substance dropping from the same into any suitable receptacle below it; but if the substance is to be thoroughly dried it will be preferable to also cause the sieve or cage to rotate, and in order that the operation may be continuous and every particle of the substance be caused to come into contact with the sieve it will be desirable to remove the substance slowly from the point where it is thrown upon the sieve to the point where it will be discharged therefrom, and this I prefer to do in the following manner: A pulley 21 is rigidly mounted upon the shaft 5, to which the sieve is operatively connected through braces 13 and collar 14, the required rotation being imparted to the sieve from any desired source through such pulley. A discharge-opening 31 is provided near the lower end of the sieve, and a helix 23, preferably of the cross-section shown in Fig. 2, is supported by rigid arms 24, projecting radially from hollow shaft 9 below the cone 10, and standards 26 between the rounds of the helix above the cone, and this helix is of large enough diameter to allow its periphery to be located in close proximity to the inside face of the sieve. With this arrangement it will be desirable to have a wall or cylinder 27 to encircle the sieve in order to catch the liquid that will be ejected through the sieve by its rotation, and this wall or cylinder carries near its lower end a trough 28, provided with a drain-cock 29, to receive the liquid, a space 30, however, being left between the trough and the lower edge of the wall or cylinder against which the dried mass can be discharged through the opening 31, near the bottom of the sieve. This wall or cylinder 27 can be supported in any desired manner, but preferably by legs 32, the space between the wall and the sieve being preferably covered by a cap 33, secured to the top of the wall or cylinder, and the space inside the sieve is preferably covered by a plate 34, perforated centrally, as at 35, to allow the passage of substance to be dried as it is dropped from the hopper to the distributer 10.

25 is a protecting-sleeve to keep the substance from sticking to shaft 9.

If it is desired to have the helix stationary, it can be supported by braces 36, (shown in dotted lines in Fig. 2,) secured to the top thereof and to the lower end of the feed-conduit, and the standards 26 can be extended throughout the full depth of the helix.

In the operation of my drier I prefer to cause the distributer and helix to travel about ten revolutions per minute faster than the sieve, which preferably travels at the rate of about seven hundred revolutions per minute, in which case both the helix and distributer and the sieve can travel in the same direction, thus moving the substance being dried over the inside face of the sieve very slowly, which is desirable in order to thoroughly dry it, or the sieve can be rotated in the opposite direction to that in which the distributer and helix travel, which will cause the substance to be moved very rapidly and to be very much disturbed, or the helix can be made stationary, as before mentioned, and the sieve caused to rotate in the direction indicated by arrows, when a medium result will be attained.

Various changes of the arrangement and combination of parts just described can be made without departing from the broad principle of my invention.

What I claim is as follows:

1. In a drier, the combination of a rotating distributer, a cylindrical sieve encircling such distributer and rotating independently thereof, the speed of rotation of the distributer being faster than that of the cylindrical sieve; an inner main shaft on which such cylindrical sieve is carried and an outer tubular shaft on which the distributer is carried, a helix located in close proximity to the inside face of such cylindrical sieve and within said open space and intermediate of the distributer and cylindrical sieve, and means for operating the shafts of such distributer and cylindrical sieve at different speeds for the purpose set forth.

2. In a drier, the combination of a rotating distributer, a rotating cylindrical sieve encircling such distributer and forming an open unobstructed space between such distributer and cylindrical sieve and throughout the interior length of the cylindrical sieve, a helix located in close proximity to the inside face of such cylindrical sieve and within such open space, and means for operating such distributer and cylindrical sieve, for the purpose set forth.

3. In a drier, the combination of a rotating distributer, a rotating perforated cylindrical sieve encircling such distributer and forming an open unobstructed space between such distributer and cylindrical sieve and throughout the interior length of the cylindrical sieve, a helix located in close proximity to the inside face of such cylindrical sieve and within said open space and intermediate of the distributer and cylindrical sieve, an inner main shaft on which such cylindrical sieve is carried and an outer tubular shaft on which the distributer is carried, with means for operating such shaft, a wall encircling such cylindrical sieve and means for operating the shafts of such distributer and cylindrical sieve at different speeds, for the purpose set forth.

4. In a drier, the combination of a rotating conical distributer, a rotating cylindrical sieve encircling such distributer, and forming an open unobstructed space between such distributer and cylindrical sieve and throughout the interior length of the cylindrical sieve, a wall encircling such cylindrical sieve, a helix located in close proximity to the inside face of such cylindrical sieve and within such open space and intermediate of the distributer and

cylindrical sieve and means for operating such distributer and cylindrical sieve, for the purpose set forth.

5. In a drier, the combination of a rotating distributer, a rotating cylindrical sieve encircling such distributer and forming an unobstructed space between such distributer and cylindrical sieve and throughout the interior length of the cylindrical sieve, an inner main shaft on which such cylindrical sieve is carried and an outer tubular shaft on which the distributer is carried with means for operating such shaft, a wall encircling such cylindrical sieve, a rotatable helix in the form of an open helix freely working within such open space above and intermediate of the distributer and cylindrical sieve and the periphery of which is located in close proximity to the inside face of such cylindrical sieve and means for operating such distributer, cylindrical sieve, and helix, for the purpose set forth.

6. In a drier, the combination of a conical distributer secured rigidly upon a hollow shaft, a cylindrical sieve, encircling such distributer secured rigidly to a shaft partially within such hollow shaft and forming an unobstructed open space between such distributer and cylindrical sieve and throughout the interior length of the cylindrical sieve, a stationary wall encircling such cylindrical sieve, a rotatable open helix freely working within such open space and intermediate of the distributer and cylindrical sieve and connected to such hollow shaft, the periphery of such helix being located in close proximity to the inside face of such cylindrical sieve, and means for operating such distributer, cylindrical sieve and helix, for the purpose set forth.

DAVID AIKMAN.

Witnesses:
WILL P. MCFEAT,
FRED. J. SEARS.