J. MOHR.

EXTENSION TABLE.

APPLICATION FILED MAY 20, 1909.

1,056,569.

Patented Mar. 18, 1913.

7 SHEETS—SHEET 1.

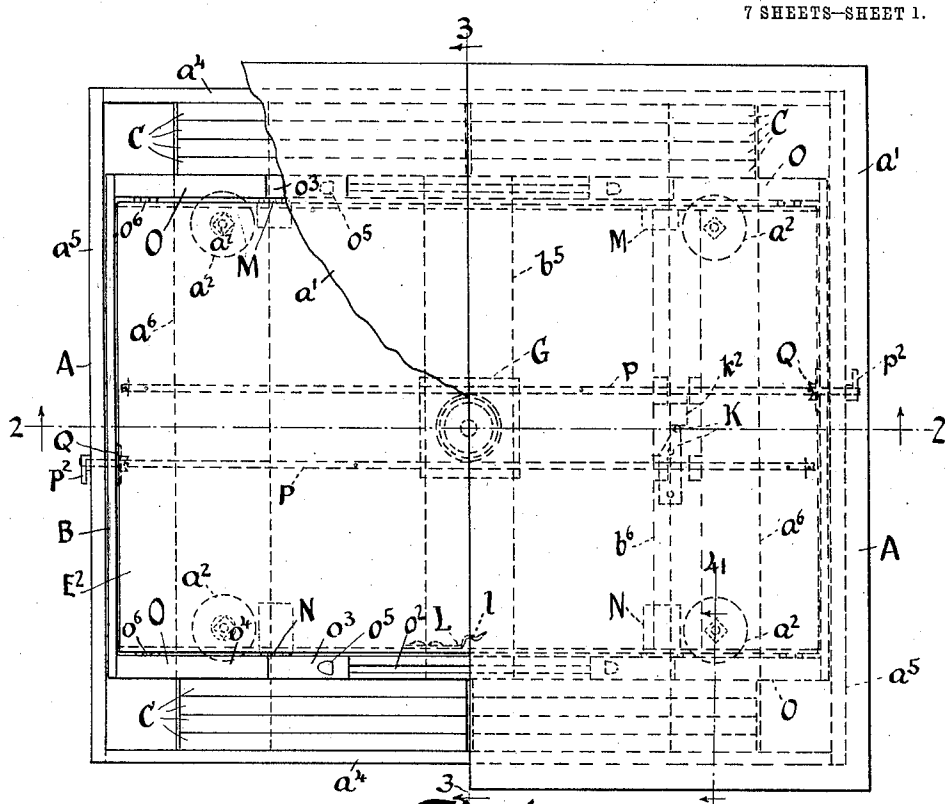

Fig. 1

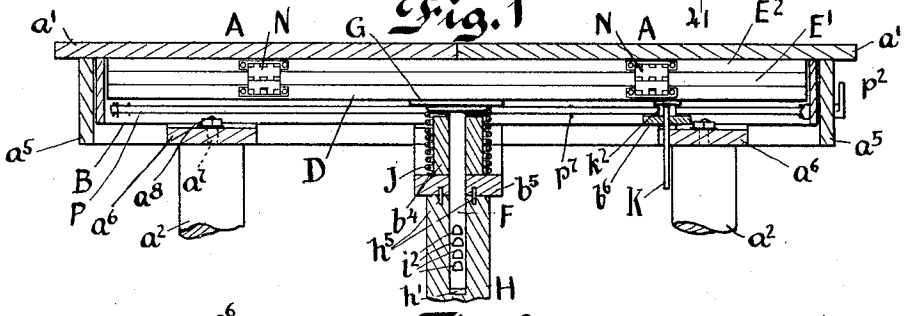

Fig. 2

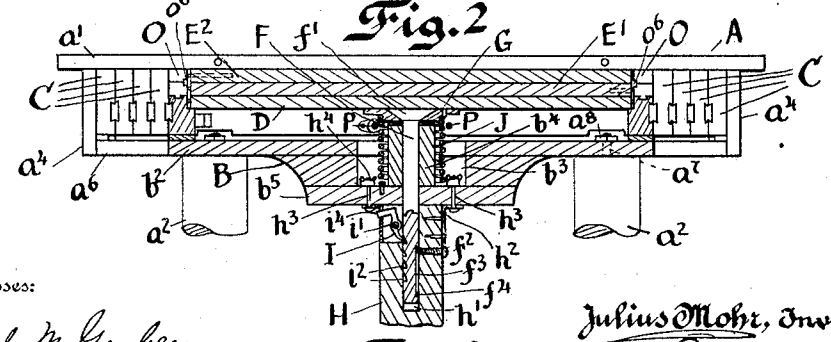

Fig. 3

Witnesses:

Joseph M. Gruber

Wilhelmina D. Schinbein

Julius Mohr, Inventor

By George Patnor Lee Attorney

COLUMBIA PLANOGRAPH CO., WASHINGTON, D. C.

J. MOHR.

EXTENSION TABLE.

APPLICATION FILED MAY 20, 1909.

1,056,569. Patented Mar. 18, 1913.

7 SHEETS—SHEET 2.

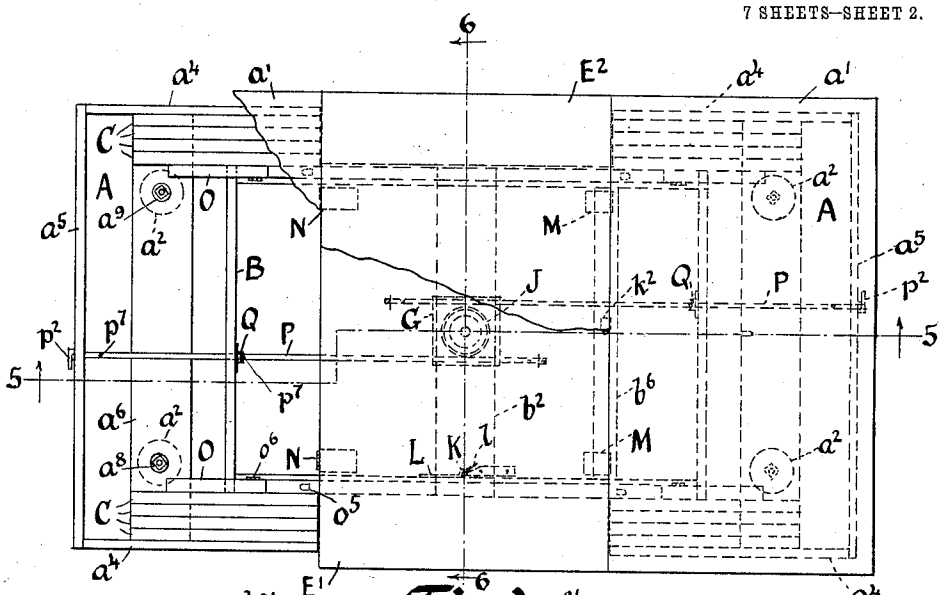

Fig. 4

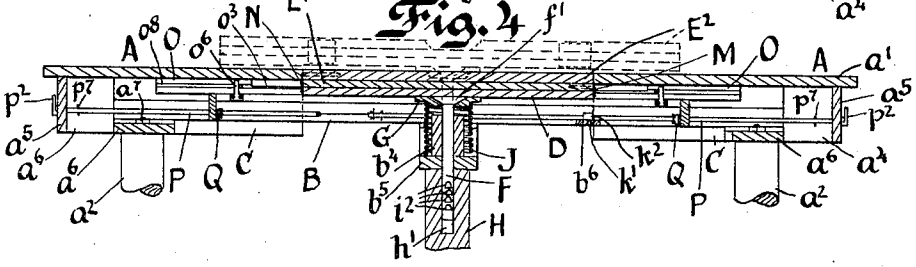

Fig. 5

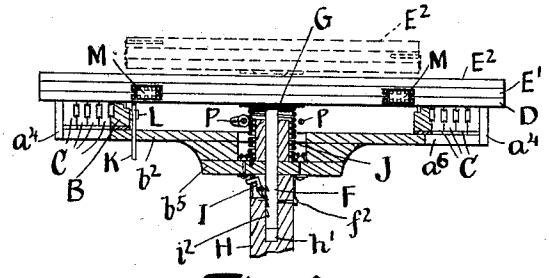

Fig. 6

Julius Mohr, Inventor

Witnesses:

Joseph M. Gruber

Wilhelmina D. Scheinbein

By George Peabody Colles

Attorney

COLUMBIA PLANOGRAPH CO., WASHINGTON, D. C.

J. MOHR.

EXTENSION TABLE.

APPLICATION FILED MAY 20, 1909.

1,056,569.

Patented Mar. 18, 1913.

7 SHEETS—SHEET 3.

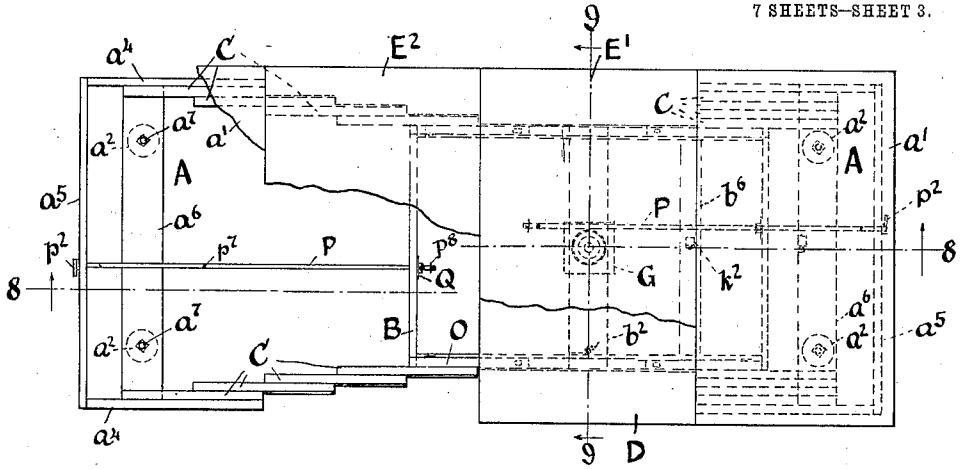

Fig. 7

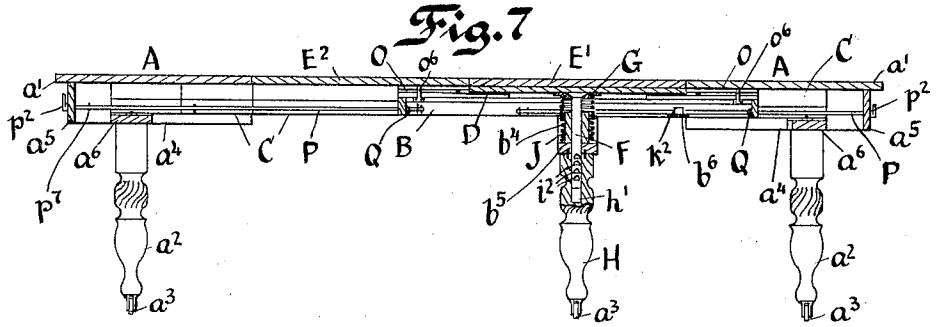

Fig. 8

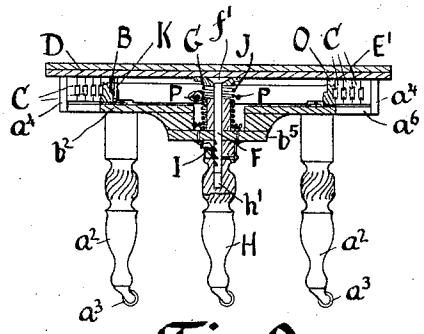

Fig. 9

Julius Mohr, Inventor,

Witnesses:

Joseph M. Gruber.

Wilhelmina D. Schinbein

By George Wetmore Colles

Attorney

COLUMBIA PLANOGRAPH CO., WASHINGTON, D. C.

J. MOHR.

EXTENSION TABLE.

APPLICATION FILED MAY 20, 1909.

1,056,569.

Patented Mar. 18, 1913.

7 SHEETS—SHEET 4.

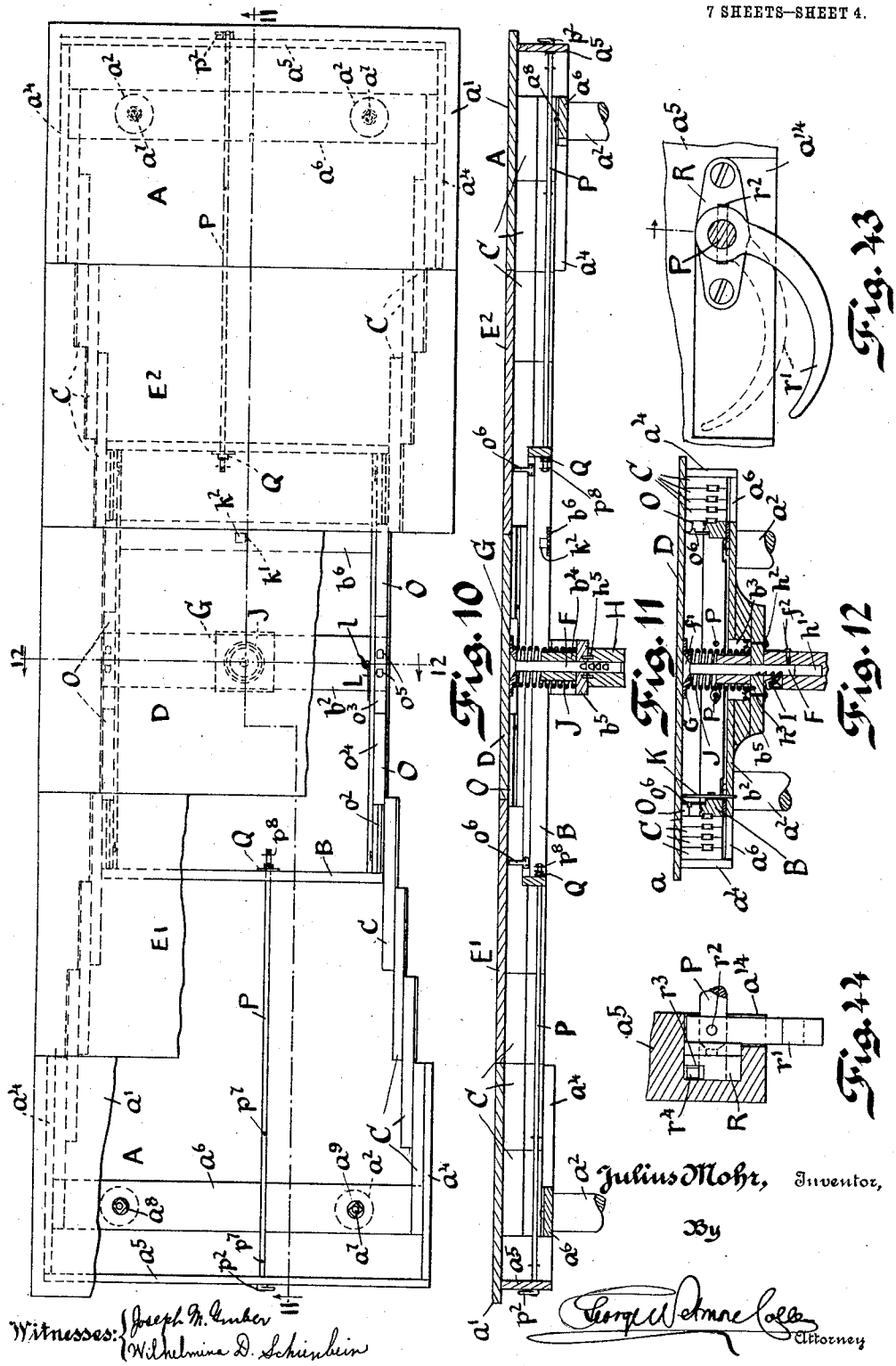

Fig. 10

Fig. 11

Fig. 12

Fig. 13

Fig. 14

Witnesses: Joseph M. Gruber, Wilhelmina D. Schinbein

Julius Mohr, Inventor,

By George Wetmore Colles Attorney

COLUMBIA PLANOGRAPH CO., WASHINGTON, D. C.

J. MOHR.

EXTENSION TABLE.

APPLICATION FILED MAY 20, 1909.

1,056,569. Patented Mar. 18, 1913.

7 SHEETS—SHEET 5.

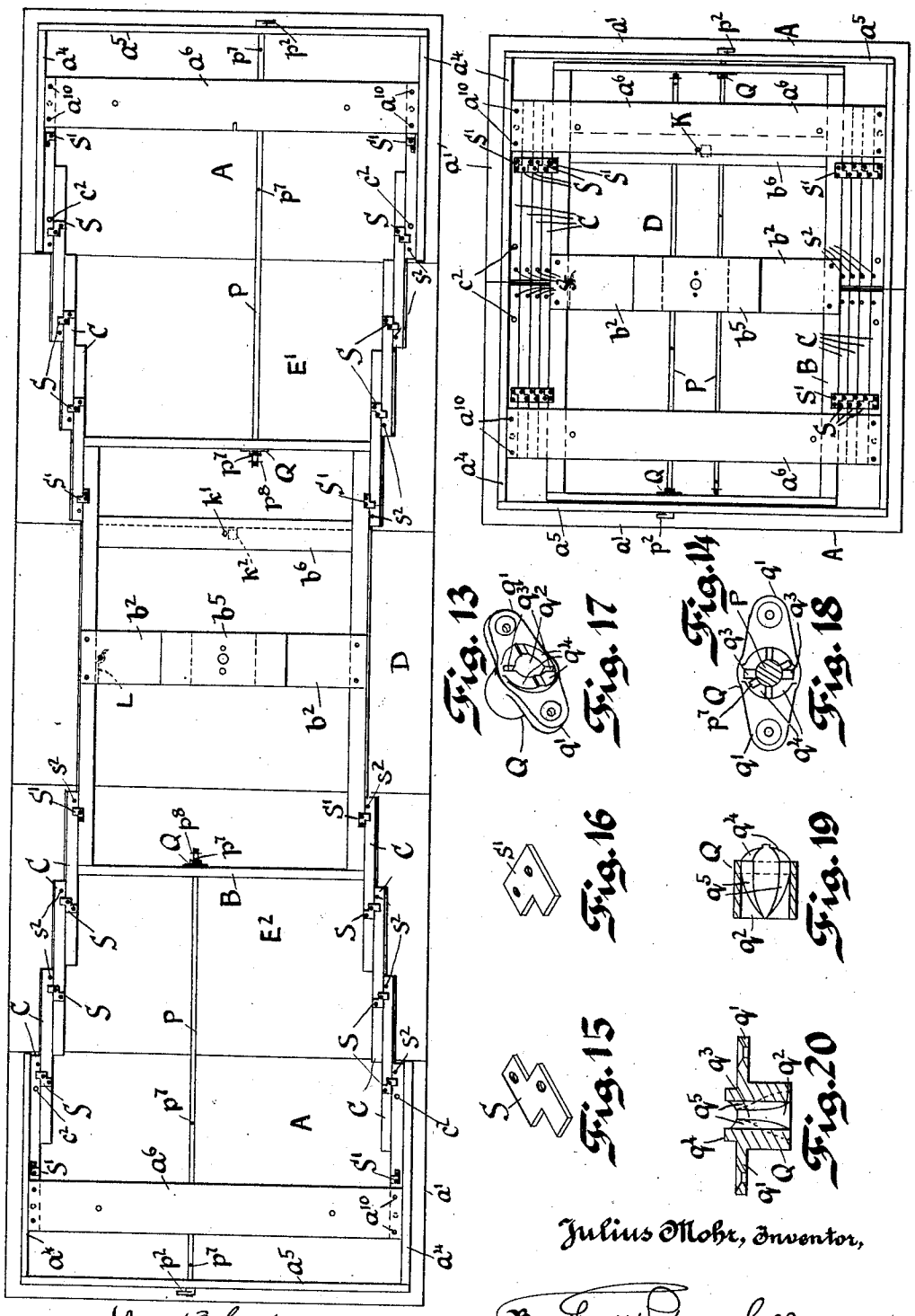

Julius Mohr, Inventor,

By George Wetmore Calle Attorney

Witnesses: Joseph W. Gruber, Wilhelmina D. Schienbein

COLUMBIA PLANOGRAPH CO., WASHINGTON, D. C.

J. MOHR.

EXTENSION TABLE.

APPLICATION FILED MAY 20, 1909.

1,056,569. Patented Mar. 18, 1913.

7 SHEETS—SHEET 6.

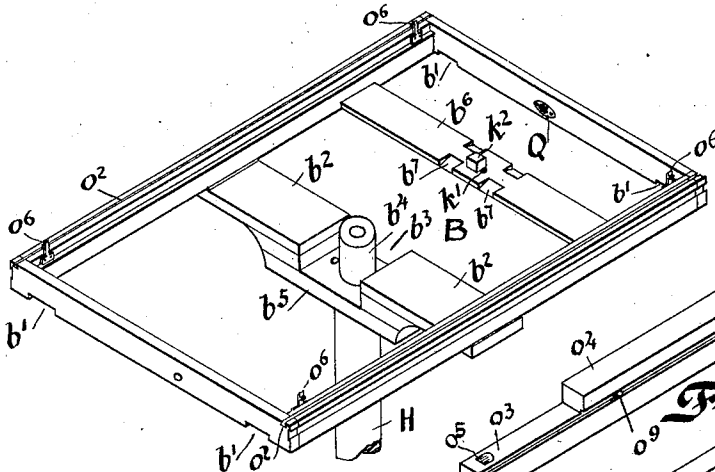

Fig. 21

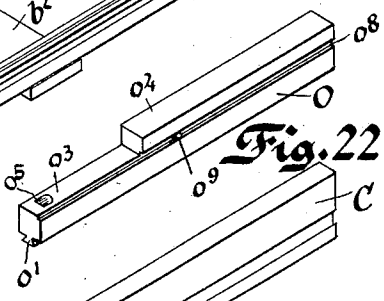

Fig. 22

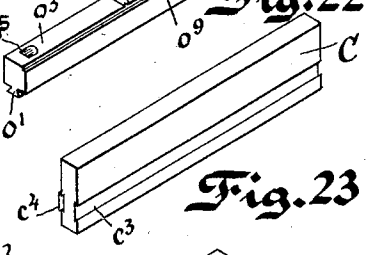

Fig. 23

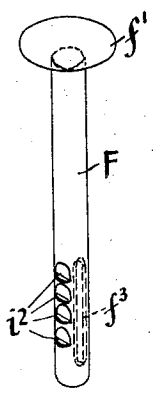

Fig. 24

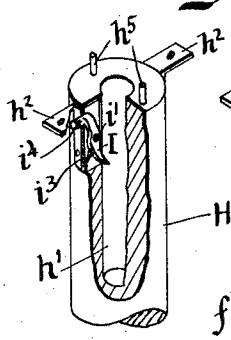

Fig. 25

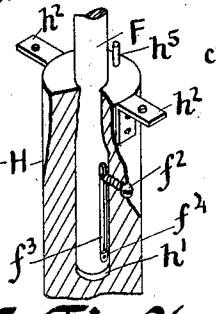

Fig. 26

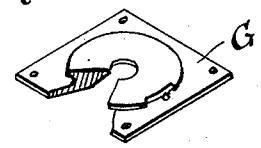

Fig. 27

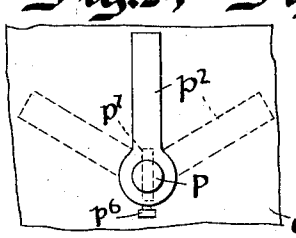

Fig. 28

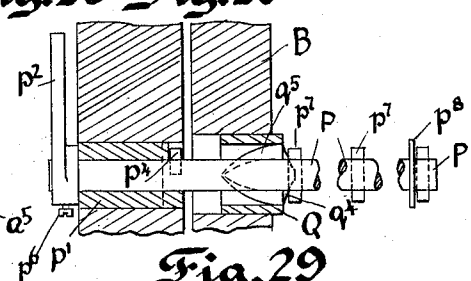

Fig. 29

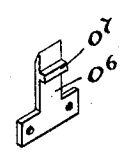

Fig. 33

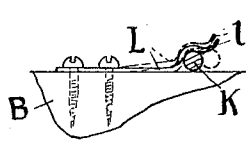

Fig. 32

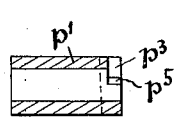

Fig. 30

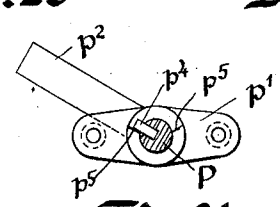

Fig. 31

Witnesses: Joseph M. Gruber. Wilhelmina D. Schienbein

Julius Mohr, Inventor,

By George Petmore Colles Attorney

COLUMBIA PLANOGRAPH CO., WASHINGTON, D. C.

J. MOHR.

EXTENSION TABLE.

APPLICATION FILED MAY 20, 1909.

1,056,569. Patented Mar. 18, 1913.

7 SHEETS—SHEET 7.

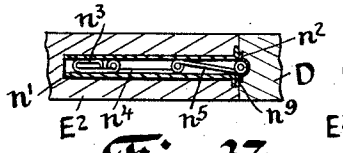

Fig. 37

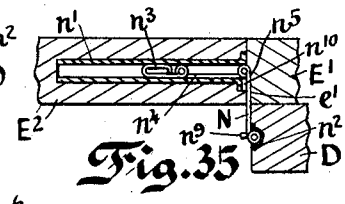

Fig. 35

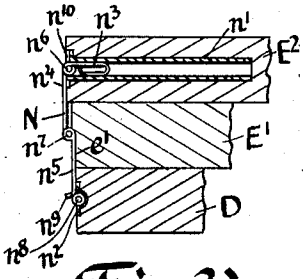

Fig. 34

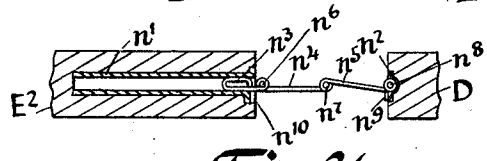

Fig. 36

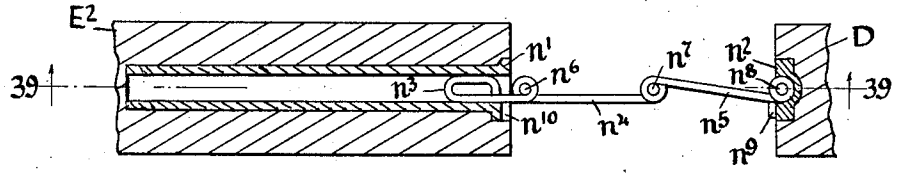

Fig. 38

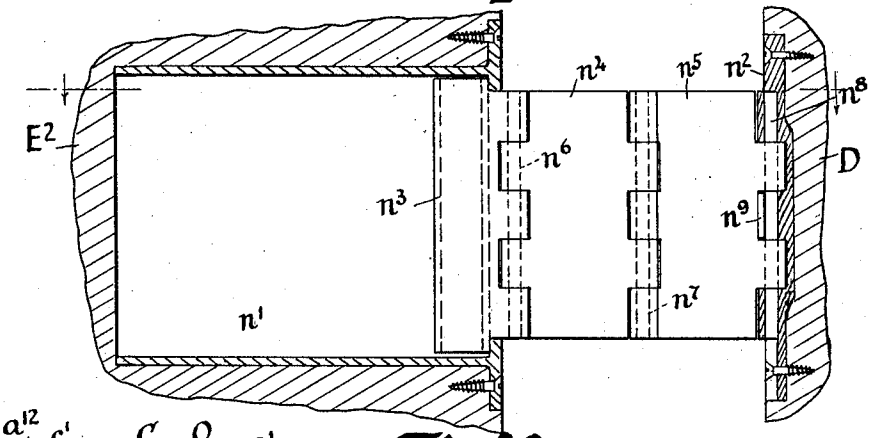

Fig. 39

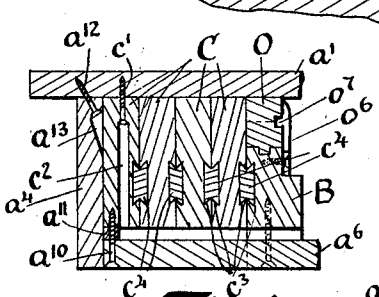

Fig. 41

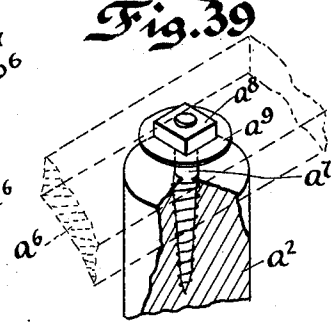

Fig. 42

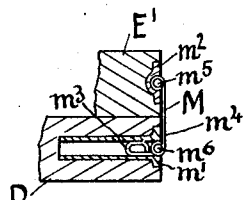

Fig. 40

Witnesses:

Joseph M. Gruber.

Wilhelmina D. Schienbein

Julius Mohr, Inventor.

By George Vernon Collins

Attorney

COLUMBIA PLANOGRAPH CO., WASHINGTON, D. C.

UNITED STATES PATENT OFFICE.

JULIUS MOHR, OF MILWAUKEE, WISCONSIN.

EXTENSION-TABLE.

1,056,569. Specification of Letters Patent. Patented Mar. 18, 1913.

Application filed May 20, 1909. Serial No. 497,261.

To all whom it may concern:

Be it known that I, JULIUS MOHR, of Milwaukee, Wisconsin, have invented an Extension-Table, of which the following is a specification.

This invention relates to tables of the folding or extensible type, wherein a table is made longer or shorter according to the wishes of the user as the demand for same may arise, the table being made up of two main members which may be pushed together closely or separated to a greater or less extent, the space between them when so extended being taken up by one or more removable leaves.

The object of the invention is to provide an improved arrangement and construction over that already patented by me in conjunction with Charles Mosch on December 1, 1908, Patent No. 905,342, so as, first, to provide a greater range of adjustability; secondly, to simplify and strengthen certain details of construction; thirdly, to enable the table to be easily dismounted and set up; and fourthly, to lock the table automatically in whatever position it may be set.

The aforesaid patent comprises, combined with the two body-members which are united in a sliding manner, a central frame or basket and a set of three folding-leaves which are disposed in said basket below the table-top when not in use, and when desired can be raised and used in two positions of extension, two of said extension-leaves acting together and being half the width of the other leaf, so that in effect the arrangement gives but two extended positions of the table. In my present invention I provide the same number of leaves as before, but these leaves are all of the same width, and means are arranged whereby one, two, or all of the leaves may be used, thus providing three positions of extension; and this number may be multiplied if desired.

Another feature of my invention consists in the means whereby the folding-leaves, when they are automatically raised and rotated by the spring, are caught and held as they swing around into position, and thus inconvenient rebounding is avoided. This is effected by means of a spring-clip which catches upon a stop-pin on the under side of the bottom-leaf.

An important feature of the invention consists in an improved lock-rod which is adapted to automatically catch and hold the table rigidly in each position of extension, so that the table may be moved around by grasping one end thereof without danger of its opening out, which is a common defect of extension-tables. This lock-rod device is a very cheap and simple affair, which, while it adds but a trifling sum to the cost of the table, infallibly accomplishes its purpose.

Another important feature of my invention consists in the triple-jointed hinge which, in conjunction with the double-jointed hinge described by me in my aforesaid patent, enables me to use the three leaves in the three several positions above referred to. The nature of this hinge will appear hereinafter.

Other features of my invention consist in the details of construction and the various combinations which will be hereinafter more specifically described and pointed out in the claims.

For the better understanding of my invention I have shown in the accompanying drawings a rectangular table built with my improvements; and herein Figure 1 is a plan view of the table in its closed or shortest position, a part of the left-hand top-board being broken away; Fig. 2 is a longitudinal section of the table on the plane 2, the legs being broken away and the extension-leaves shown in elevation; Fig. 3 is a transverse central section on the plane 3; Fig. 4 is a plan view of the table in its first position of extension (one extension-leaf being used), a part of the extension-leaf and left-hand top-board being broken away; Fig. 5 is a longitudinal section through the table in the same position, on the stepped plane 5; Fig. 6 is a transverse, central section through the same on the plane 6, the leaves being shown in elevation; Fig. 7 is a plan view of the table in its second position of extension (two extension-leaves being used) a part of each extension-leaf and of the left-hand top-board being broken away; Fig. 8 is a longitudinal section of the table in the same position, on the stepped plane 8; Fig. 9 is a transverse central section of the table in the same position, taken on the plane 9; Fig. 10 is a plan-view of the table in the fully extended position (all three leaves being used), a part of the middle and left-hand extension-leaves and the left-hand top-board being broken away; Fig. 11 is a longitudi-

nal section through the table in the same position on the stepped plane 11; Fig. 12 is a transverse central section of the same taken on the plane 12; Fig. 13 is a bottom plan-view of the table in its fully extended position with the legs removed, to illustrate the locking-devices and stops for the table-slides; Fig. 14 is a similar view of the table in its closed position; Figs. 15 and 16 are perspective views of the stop-plates for the slides; Fig. 17 is a perspective view of the socket or locking-block for the lock-rod; Figs. 18, 19 and 20 are respectively a front view, a vertical axial section and a horizontal axial section of the same; Fig. 21 is a perspective view of the central frame or basket for the extension-leaves; Fig. 22 is a perspective view of one of the sliding-rests for the leaves; Fig. 23 is a perspective view of one of the extension-slides; Fig. 24 is a perspective view of the sliding swivel-post; Fig. 25 is a similar view partly broken away through the center-leg of the table; Fig. 26 is a similar view of the same from the opposite side, showing the swivel-post in position therein; Fig. 27 is a perspective view partly cut away of the swivel-plate for the center-leaf; Fig. 28 is an end or face-view of the lock-rod and operating-handle therefor; Fig. 29 is a longitudinal view of the lock-rod, operating-handle, bearing-block and locking-block, parts of the rod being broken away; Fig. 30 is a lonigtudinal section through the bearing-block of the same; Fig. 31 is an inside end-view of the bearing-block and handle, showing the lock-rod in section; Fig. 32 is a plan view of the spring-clip for holding the leaves after they have swung around showing the stop-pin in section; Fig. 33 is a perspective view of the stop-piece for the slide-rests; Figs. 34, 35, 36 and 37 are longitudinal sections through the triple-jointed hinge in its successive positions from the completely closed to the completely extended position of the table; Fig. 38 is a view similar to Fig. 36 but on a larger scale; Fig. 39 is a bottom-plan section through the hinge on the plane 39 of Fig. 38; Fig. 40 is a sectional elevation of the double-jointed hinge; Fig. 41 is a fragmentary transverse section of the table on the plane 41 (Fig. 1); Fig. 42 is a perspective view of the end of one of the corner table-legs, showing the manner of removably attaching it to the table; Fig. 43 is an inside elevation of the end-board of the table as provided with an internal operating-handle for the lockrod; and Fig. 44 is a side elevation of the same arrangement, the end-board being shown in section in the plane of the axis of the lockrod.

In these drawings the same part is designated by the same reference letter or numeral in each figure.

Because I have herein shown a rectangular table it does not follow that the improvements, or many of them, cannot be used upon other shapes of tables; nor that because I have shown three extension-leaves, a greater or less number cannot be used consistently with my invention.

The table comprises two extensible or end-members A which are connected together in slidable relation with a rectangular center-frame B by means of a plurality of extension-slides C. Upon the center-frame B are articulated, in a manner which will be hereinafter described, the central-extension-leaf D, and two lateral extension-leaves E′ and E².

Each of the members A comprises a top-board a', a pair of legs a^2 which may or may not be provided with casters a^3, side-boards a^4 and end-boards a^5; and the legs a^2 are removably secured to a cross-plank a^6 by the novel means shown in detail in Fig. 42. A headless lag-screw a^7 is screwed longitudinally into the end of the leg and its end is threaded to receive a nut a^8 and washer a^9, said nut being inserted through a suitably placed hole in the plank a^6 and the nut a^8 being thereafter screwed down over the plank as shown, thus enabling the legs to be removed and set up without difficulty and without disturbing the operation of the table.

The extension slides C are disposed in symmetrical sets on each side of the center as in the patent hereinbefore referred to, the outermost slide of each set being secured in a suitable manner to the end-member of the table. The preferred manner of securing it thereto is by means of screws c' passed through tubular bores c^2 extending upward from the bottom of the slide, said screws entering and securing the slide to the top-board a' of the end-piece. The cross-pieces a^6 to which the legs are secured are in turn fastened by screws a^{10} to the outer or fixed slides as shown, the spacing-pieces a^{11} being inserted between them so as to hold the cross-pieces apart from the slides and center-frame B. The side-pieces a^4 are independently secured to the top-boards a' by screws a^{12} set diagonally through recesses a^{13}.

I have succeeded in considerably simplifying the arrangement of the slides C as shown in the patent above referred to, for instead of the T-shaped tenons and mortises formed on the slides, I arrange a dovetailed groove c^3 on each side of each slide and a plurality of double dovetailed tenon-strips c^4, one half of each of which fits in one of two opposing grooves (see Figs. 23 and 41). The sides of the center-frame B are grooved in like manner to receive the tenon-strips c^4, and the transverse end-bars of the frame are cut out if necessary as shown at b' in Fig. 21 to avoid interference with the nuts a^8.

The central extension-leaf D is rotatably

mounted upon the upper end of a swivel-post F which has a flattened conical head f' engaged by a cupped swivel-plate G secured to the under side of the leaf, substantially of the form shown in the patent above referred to. Said swivel-post is socketed in a bore h' in the upper end of the center-leg H, and it will be observed that I have considerably simplified the construction by making the swivel-post entirely of metal. Said post is held from turning by means of a screw f^2 driven into the side of the center-leg and the end of which projects into a groove f^3, the end of said groove also acting as a stop to limit the rise of the leaves and being provided with a rubber cushion f^4. A pivoted finger-pawl I pivoted upon a pin i' has a tongue which extends into one of four notches i^2 corresponding to the four optional changes in size of the table. A light plate-spring i^3 holds the nose of the pawl pressed into engagement with said notches, and a press-button i^4 permits its withdrawal therefrom by the finger. The cross-plank b^2, which forms the means for uniting the center-leg H to the frame B, is made in composite form, with a central recess b^3 adapted to receive the coiled compression and torsion-spring J and cylindrical guide-block b^4; said spring having one end secured to the plank b^5 on which it rests and the other end to the swivel-plate, exactly as described in my aforesaid patent. The leg H is removably secured to the cross-piece b^5, which is the central component member of the plank b^2, by means of a pair of angle-pieces h^2 mounted on the sides of the leg and secured to the plank by bolts h^3 having wing-nuts h^4.

The spring J being under compression, the release thereof by pressing the button i^4 after the two halves of the table have been separated causes the leaves to be raised to the limit of their movement, which is so placed that the leaves clear the top-boards, as shown by the dotted-line positions of Figs. 5 and 6; and the spring J, being also under torsion, will act after raising the leaves to swing them around upon the axis of the swivel-post I. In order to limit the turning-movement to a right-angle, a depending vertical pin K is mounted on the under side of the leaf D, in position to enter a hole k' in a cross-board b^6 of the frame B when the leaves are depressed, a block k^2 being set against one side of this hole to prevent any turning-movement beyond that position or in that direction. In the middle of the adjacent side of the frame B, and on the inner side thereof, is mounted a spring-clip L, the same consisting of a resilient plate having a socket l adapted to receive, grasp and hold the pin K when the latter, carried by the insertion-leaves, is swung around into position of use. This spring-clip L therefore prevents any rebound on the part of the leaves and prevents them from occupying any but the correct position for insertion in the table.

The means by which the leaves E', E^2, fold one over the other, and are articulated to the leaf D so as to permit of this action and to permit not only of the member E' occupying when unfolded a position on a level with the leaf D, but also to permit of the upper leaf E^2 occupying when unfolded a position either on a level with the folded leaf E', or with the center-leaf D, forms a special feature of my invention which is shown on Sheet 7 of the drawing (Figs. 34 to 40 inclusive). The leaf E' is hinged to the leaf D by the double-jointed hinge M, the same as shown in my aforesaid patent, being composed of a deep casing or pocket m' mounted in the edge of the leaf D in a recess therein, a joint-base m^2 mounted on the edge of the leaf E', a sliding-member m^3 mounted within the pocket m', and the hinge-leaf m^4 which is pivotally connected by the pintles m^5, m^6 to the joint-base m^2 and sliding-member m^3 respectively. In the case of the leaf E^2 however, three positions are required instead of two, and to this end I have devised my triple-jointed hinge N, the construction of which is as follows. A deep-casing or pocket n' is mounted in a recess in the edge of the leaf E^2, and a joint-base n^2 is mounted on the edge of the leaf D, and a sliding-member n^3 is slidably mounted within the pocket n'; these three members being substantially the same as the members m', m^2 and m^3 respectively of the double-jointed hinge M, except that the pocket n' is deeper. The sliding-member n^3 is connected with the base n^2 by means of two members n^4, n^5, which I will here term links and which are pivotally united by the pintles n^6, n^7 and n^8. The construction is such as to allow each of the three successive positions of the hinge shown in Figs. 34, 35 and 37; in the first of which the two hinge-links are both drawn out; in the second the first hinge-link n^4 is pushed into the pocket n'; and in the third both hinge-links are in said pocket. The position shown in Fig. 36 shows the act of bringing the leaf into the third position and before the hinge-links n^4, n^5 have been pushed into the pocket, and to prevent them from dropping down in this position and hold them rigidly extended, a small tab n^9 is turned down from the metal between two pintle-lugs on the link n^5, said tab resting against the joint-base n^2 and being received in a recess n^{10} upon the edge of the pocket n' when the leaves are pushed together. It will be observed that, to avoid unnecessary notching on the edge of the leaf E', to make room for the hinge, said leaf is made slightly narrower than the leaf

E^2 as shown in Fig. 34, being cut away slightly only on one side of the edge as shown at e', so that only when this leaf E′ is unfolded, that is to say in the fully extended position of the table, does the notching appear upon the surface of the table.

In order to support the leaves in the several positions I arrange a set of stepped sliding-rests O which have dove-tailed tenons o' engaged in dove-tailed grooves o^2 in the edges of the side-members of the frame B; said rests having two rest-surfaces o^3 and o^4, the first being the thickness of a leaf above the side-edges of the frame B and the second the thickness of a leaf above the surface o^3. A notch o^5 is conveniently provided whereby the rests may be drawn together, and a metal-clip o^6 is mounted at the corner of the frame B on the inner side of the rest, which clip has a tongue o^7 engaging in a groove o^8, and a pin o^9 is set in said groove which limits the outward movement thereof. This is an important and simplified construction over that shown in the aforesaid patent, because it enables the rest to be shaped as continuous molding and requires no special cutting other than the step o^3.

In the first position of extension, in which only the leaf E^2 is used, the slides O are naturally pulled apart, as shown in Figs. 4, 5 and 6, so that the three leaves rest directly upon the edges of the frame B. In the second position of extension, in which the leaf E^2 is open and rests on a level with the leaf E′ as in Figs. 7, 8, 9, and 35, the rests O are drawn in part way until the leaves D, E′ rest upon the rest-surfaces o^3, while the unfolded leaf E^2 rests upon the rest-surfaces o^4, and the slides C. When the table is fully extended, the slide-rests are drawn in until the center-leaf D rests upon the rest-surfaces o^4 and the other leaves upon the slides C, as shown in Figs. 10, 11, 12 and 37. Suitable dowels will ordinarily be placed upon the edges of the leaves as shown in my aforesaid patent, but are not here shown as they form no essential part of my invention.

For the purpose of locking the table in any of the positions in which it may be placed so as to prevent it from opening out when pulled from one end, a simple and effective locking-device is very much to be desired. For this purpose I introduce at each end of the table a lockrod P, which is pivoted in a bearing-box p' set in a hole bored in the end-board a^5 of the table. The lockrod has on one end an operating-handle or arm p^2, and the opposite end of the bearing-piece p' is recessed at p^3 to receive the projecting-end of a pin p^4 set in the lockrod, whereby the lockrod is prevented from endwise movement and the rotation thereof is also limited by the shoulders p^5 at the ends of recess p^3. It is not essential to my invention that the handle p^2 should be placed on the outside of the end-board, and if desired the handle p^2 and pin p^4 may be interchanged in position. The handle is secured against turning upon the rod in any suitable manner, as by a set-screw p^6.

The free end of the rod P passes through a locking-block Q, which is set in a hole in the end-board of the frame B, as shown in Figs. 10, 11, 12, 13, 14, 21 and 29; said locking-block (see Figs. 17 to 20) has screw-ears q' or other means of attachment to the frame B, and a bore q^2 fitting the rod and acting as a journal-bearing therefor; and on opposite sides are a pair of notches or recesses q^3 adapted to pass any one of a number of pins p^7 which are set upon the rod P is positions corresponding to the several extensions of the table. To prevent the rod from being drawn completely out, a washer p^8 may be mounted on the end of the rod, and the edges of the cross-plank b^6 may be beveled off, as at b^7, to avoid the catching of this washer on the edges thereof. On the inner face of the block, and on each side of the recesses q^3 are formed oblique cam-faces q^4 (see Figs. 17, 18 and 19) which are engaged by any of the pins p^7 after it has passed through the recesses q^3 and is then rotated, so that by proper placing of the pin p^7, the rotation of the rod tends to draw the table up tightly into position and to compensate for any irregularity in the width of the leaves or the setting of the pins upon the rod. It will be observed, as shown in Figs. 19 and 20, that the recesses q^3 are narrowed to the size of the protruding ends of the pin p^7 at the cam-face of the block Q, and that inside the bore they open out obliquely, forming cam-faces q^5, so that when in the pushing together of the table one of the pins p^7 enters the bore of the block its ends will be engaged laterally by the cam-faces q^5 and turned into the position in which it passes completely through the notches, when it will drop over the cam-faces q^4 by reason of the weight of the handle p^2. Thus there is no resistance encountered to the pushing together of the table, and when pushed up to the locking position it will lock automatically.

In handsome or ornamental tables it will often be preferable to place the operating-handle of the lockrod out of sight, and for this purpose I may adopt the alternative arrangement shown in Figs. 43 and 44. On the inner face of the end-board a^5 of the table a recess a^{14} is cut (this would be unnecessary in cases where a space is left between the frame B and the end-board in the closed position of the table, see Fig. 14) and the bearing-block R set therein to receive the end of the rod P. An operat-

ing-handle r' is fixed upon the rod adjacent to the bearing-block and within the recess a^{14}, as by means of a pin r^2, said handle having a limited angle of movement sufficient to release the pins p^7 from the locking-block Q when the handle is moved into the dotted line position, and the weight of the handle otherwise holding the pin p^7 in engagement with the cam-faces q^4 of the locking-block. Means are provided for preventing endwise movement of the rod in the bearing-block and also limiting its angular movement, as for example a notch r^3 on the inner end of the block which is engaged by a pin r^4.

For the purpose of limiting the extension of the slides I provide improved means consisting of a series of stepped plates S S′ mounted on the bottom-edges of the slides and interlocking with each other in the closed position as shown in Fig. 14. Each plate (except those on the outermost slide and the frame B) has an end projecting over the adjacent slide, and projecting-pins s^2 are set near the inner ends of the slides to limit the extension, said pins striking upon the stop-plates when the table is fully drawn out.

Having thus described my invention, what I claim as new and desire to secure by Letters Patent is:

1. In an extension-table, the combination with the end-pieces slidably connected and each having one or more supporting-legs and a top-board, of a central frame slidably connected with said end-pieces and having a bar across the center thereof, said bar having a depending offset in the center with a recess in its upper side, an extension-leaf pivotally mounted on said central frame and adapted to occupy a position therein below the top-boards of the end-pieces, and a spring adapted to raise said extension-leaf and seated in said recess.

2. An extension-table comprising, in combination with the end-pieces and central frame slidably connected one with the other, a rising and falling swivel-post centrally mounted in said central-frame, an extension-leaf rotatably mounted on the upper end of said swivel-post, a spring adapted to raise said leaf to a position above the level of the top-boards, a second-leaf hingedly connected to the first and foldable thereover and of substantially the same width, and a third leaf hingedly connected with the first and foldable thereover and of substantially the same width; both of said last-named leaves being adapted when unfolded to occupy positions on a level with and adjacent to and on opposite sides of said first leaf; and said hinge-connection of said top-leaf with the bottom-leaf permitting also of the alinement of said top-leaf on a level with and adjacent to said second leaf.

3. An extension-table comprising, in combination with the end-pieces and central frame slidably connected one with the other, a rising and falling swivel-post centrally mounted in said central-frame, an extension-leaf rotatably mounted on the upper end of said swivel-post, a spring adapted to raise said leaf to a position above the level of the top-boards, a second-leaf hingedly connected to the first and foldable thereover and of substantially the same width, and a third leaf hingedly connected with the first and foldable thereover and of substantially the same width; both of said last-named leaves being adapted when unfolded to occupy positions on a level with and adjacent to and on opposite sides of said first leaf; and said hinge-connection of said top-leaf with the bottom-leaf permitting also of the alinement of said top-leaves on a level with and adjacent to said second leaf, and a set of stepped sliding-supports mounted on the upper edge of said central frame and slidable toward and from the center; the edge of said central frame being adapted when said sliding-supports are drawn out to support said extension-leaves in a position with the top leaf folded and level with the top-board; when moved part way in to support on the intermediate step thereof the second leaf level with the top-boards, and when moved all the way in to support the bottom-leaf on a level with the top-boards.

4. In an extension-table, the combination with an extension-leaf and a swivel-mounting permitting the raising and depressing and rotation thereof, a spring adapted to rotate said leaf, a pin depending from the under side of said leaf, and a clip adapted to catch and hold said pin when said leaf has been swung around into transverse position to the table by said spring.

5. In an extension-table, in combination with the end-pieces and central frame slidably connected one with the other, a rising and falling swivel-post, an extension-leaf rotatably mounted on the upper end of said post, a coiled compression and torsion spring mounted on said frame and secured to the under side of said extension-leaf and adapted to raise the same above the top-boards of the table and rotate in through an angle of 90 degrees, and a pin depending from the underside of said leaf and extending into a hole in said frame when depressed whereby said leaf is prevented from rotating until it has risen to the top of its movement and is clear of the top-board of the table.

6. In an extension-table, the combination of an extension-leaf, a second extension-leaf hingedly united at one edge to the adjacent edge of the first-named leaf and foldable immediately thereover and adapted to lie

on a level with said first-named leaf when unfolded; and a third extension-leaf hingedly connected at its edge to the adjacent edge of said first-named leaf and adapted to lie when folded immediately over and upon said second leaf and when unfolded having two positions at the option of the user, in the first of which it is on a level with said second leaf in the folded position, and has its hinged edge abutting against the free edge of said second leaf, and in the second lies on a level with the first-named leaf and having its hinged edge abutting against the edge of said first-named leaf.

7. In an extension-table, the combination of an extension-leaf, a second extension-leaf and a triple-jointed hinge uniting one edge of said second leaf to one edge of said first-named leaf; said triple-jointed hinge permitting at the option of the user of three positions of said second leaf with respect to said first-leaf, in the first of which positions said second-leaf lies on a level with said first leaf with the two hinged edges abutting one against the other, and in the second of which positions said second-leaf lies immediately above the first position at a height above the first position equal to the thickness of the leaf, and in the third of which positions said second leaf is reversed bottom side up with respect to the first and second positions and lies directly over said first leaf.

8. In an extension-table, the combination of three extension-leaves foldably superposed one over the other and unfoldable to lie on the same level; a hinge connecting the bottom-leaf with the middle leaf and embodying a pocket set in the edge of one of said leaves, a sliding-member in said pocket, and a connecting-element pivotally connecting said sliding-member with the other leaf and receivable in said pocket; and a second hinge uniting the bottom-leaf to the top-leaf and comprising a pocket set in the edge of one of said leaves, a member sliding in said pocket, and a connecting-element between said sliding-member and the other leaf pivoted to both and adapted to be received into said pocket when the upper leaf is unfolded and moved into a position adjacent to and on a level with the bottom-leaf.

9. In an extension-table, the combination of three extension-leaves folding one over the other, said extension-leaves having pockets formed in their hinged edges between the two faces of the leaf and leaving the material of the leaf intact upon the two faces thereof; and hinges adapted to be received into said pockets and having a sliding articulation therewith connecting the three leaves together in a manner permitting the leaf on one end to be folded over the middle leaf, and the leaf on the other end to be folded over both the other leaves, and permitting the three leaves when unfolded to lie flush with and abut against each other at the edges.

10. In an extension-table, the combination of three extension-leaves folding one over the other, said extension-leaves having pockets formed in their hinged edges between the two faces of the leaf and leaving the material of the leaf intact upon the two faces thereof; and hinges connecting the three leaves together in a manner permitting the leaf on one end to be folded over the middle leaf, and the leaf on the other end to be folded over both the other leaves, and permitting the three leaves when unfolded to lie flush with and abut against each other at the edges; said hinges embracing a row of links adapted to slide into and out of said pockets.

11. In an extension-table the combination of three extension-leaves folding one over the other, and having pockets in their marginal edges lying between the two flat faces of the leaves, and hinges connecting each of the upper leaves with the bottom leaf, and permitting them when folded to lie flush with the bottom leaf; said hinges having a sliding movement in said pockets and adapted to be received completely thereinto.

In witness whereof I have hereunto set my hand this 17th day of May 1909.

JULIUS MOHR.

Witnesses:
T. A. BRODESSER,
CHARLES MORF.

Copies of this patent may be obtained for five cents each, by addressing the "Commissioner of Patents, Washington, D. C."