Dec. 15, 1942. C. H. NICKELL 2,305,317

ROTARY COMPRESSOR

Filed April 9, 1938 3 Sheets-Sheet 1

Fig. 1.

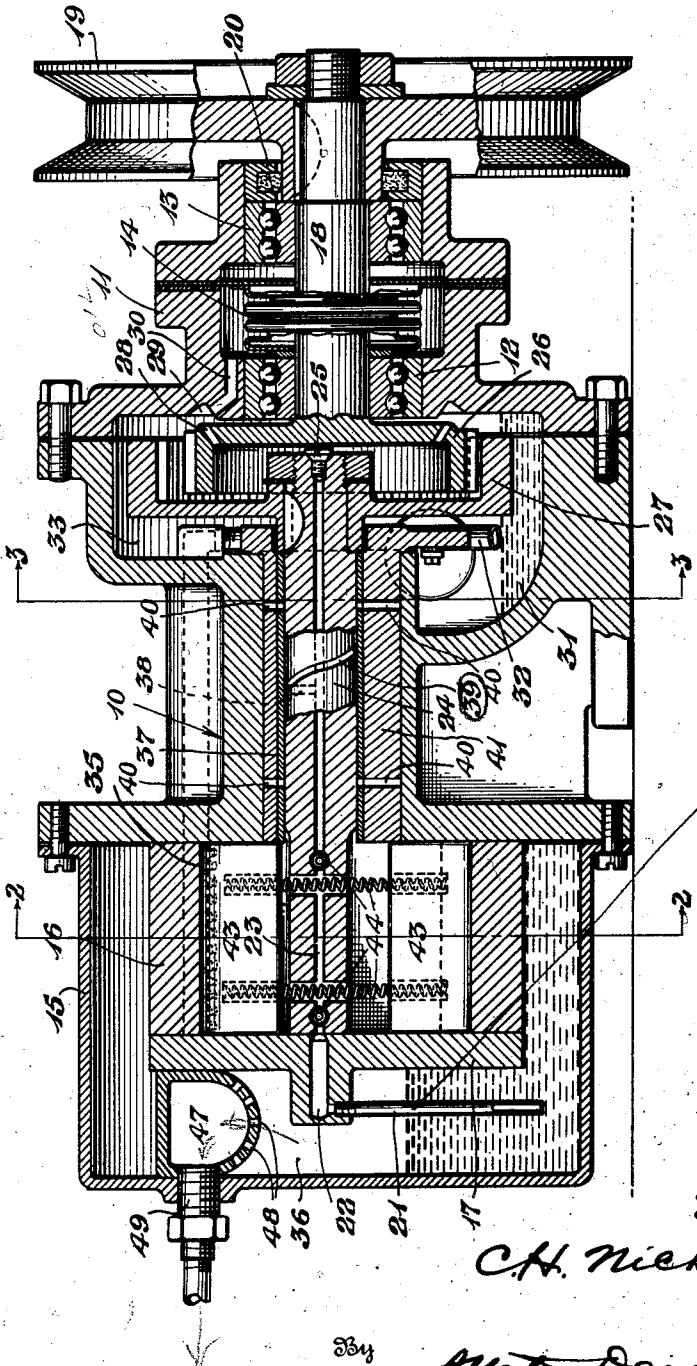

oil drains up thru tubes and delivery thru grove 39 by centrifugal force to shaft bearing

Inventor

C. H. Nickell

By A. Yates Dowell

Attorney

Dec. 15, 1942. C. H. NICKELL 2,305,317

ROTARY COMPRESSOR

Filed April 9, 1938 3 Sheets-Sheet 2

Fig. 2.

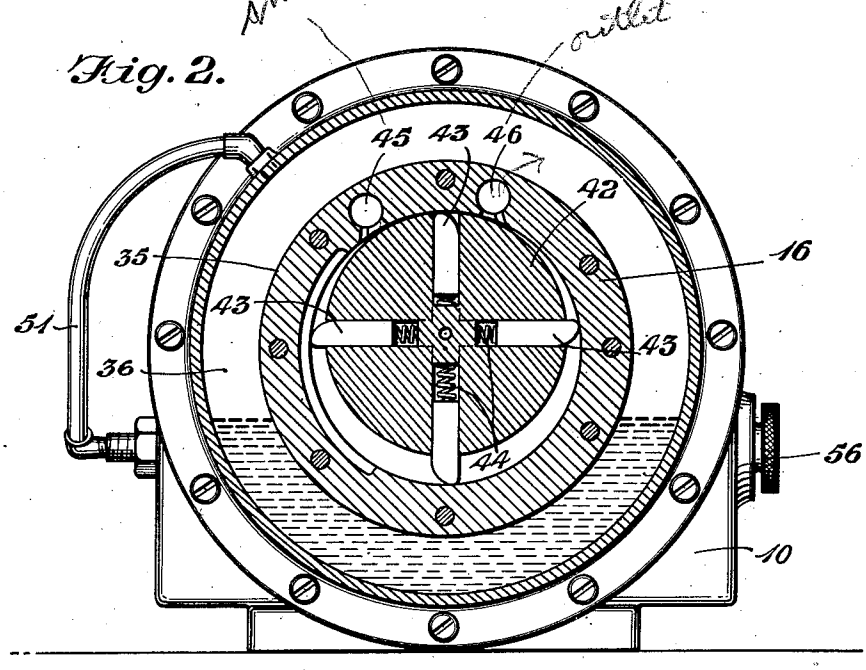

Fig. 3.

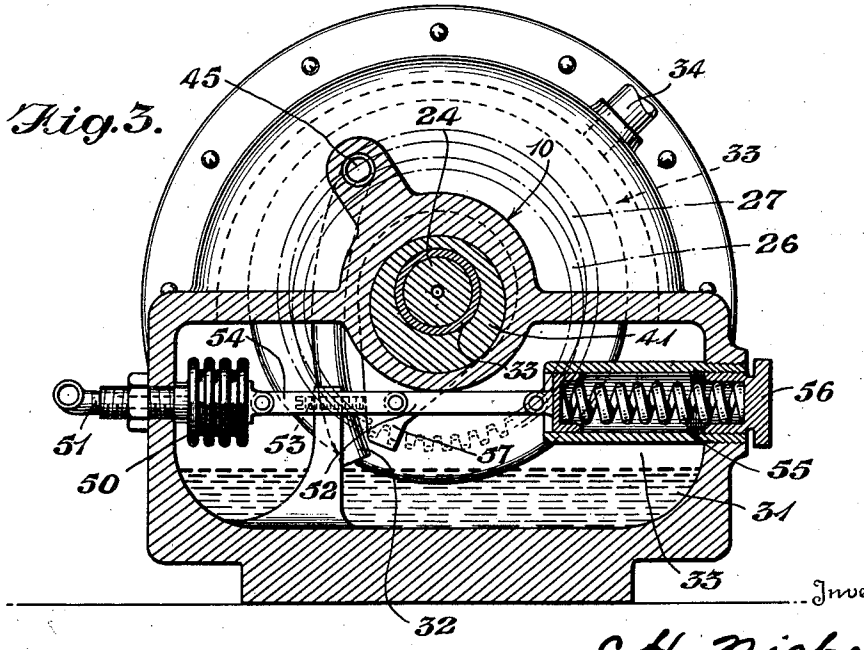

Inventor

C. H. Nickell

By A. G. Dowell

Attorney

Dec. 15, 1942. C. H. NICKELL 2,305,317

ROTARY COMPRESSOR

Filed April 9, 1938 3 Sheets-Sheet 3

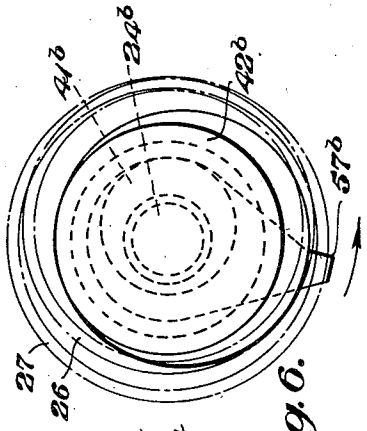

Fig. 6.

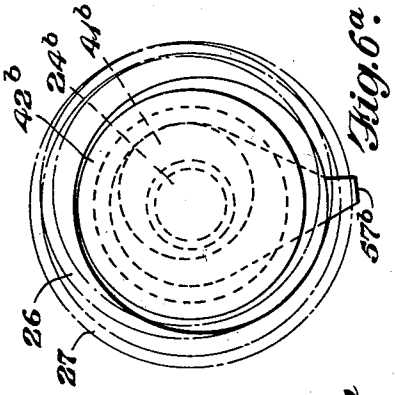

Fig. 6a.

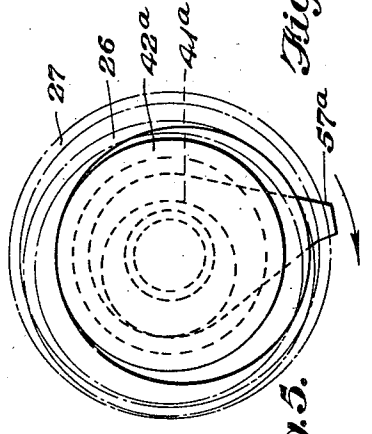

Fig. 5.

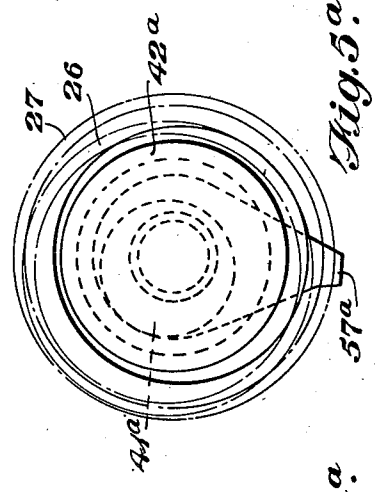

Fig. 5a.

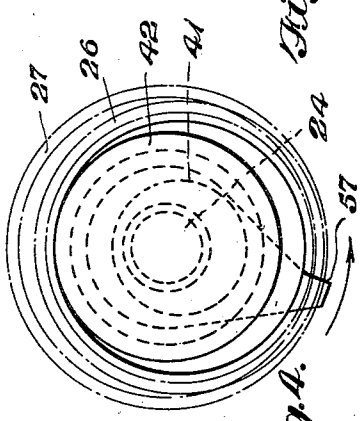

Fig. 4.

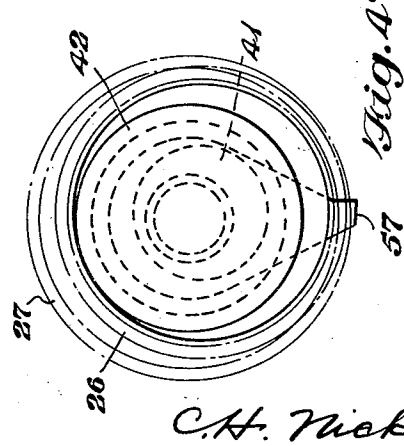

Fig. 4a.

Inventor

C. H. Nickell

By A. Yates Dowell

Attorney

UNITED STATES PATENT OFFICE

2,305,317

ROTARY COMPRESSOR

Claude H. Nickell, New Castle, Ind.

Application April 9, 1938, Serial No. 201,165

2 Claims. (Cl. 230—207)

This invention relates to compression apparatus and more particularly to a compressor of the rotary type.

Prior to my invention it has been customary to utilize various expedients in the control of the capacity of compressors. In those installations where the compressor is driven by a motor operating at constant or various speeds, and where it is desired that the compressor deliver a constant pressure, it has been proposed that unloaders comprising spring pressed valves, be incorporated in a by-pass between the discharge end of the compressor and its intake whereby when the compressor is driven relatively fast, the compressor will be unloaded and excessive pressure avoided, and when the compressor is driven relatively slow or at a normal speed the by-pass will be closed and the compressor will act at full capacity. This arrangement has been found to be relatively inefficient and excessive energy is required to drive the compressor to effect the desired results, it being necessary for the compressor to act against the spring operated valve at all times when the compressor is rotating at more than normal speed, at normal speed, or at less than normal speed.

It is the object of my invention to provide a simple, rugged, inexpensive, variable capacity rotary compressor for operation at constant variable speed conditions.

It is a further object of my invention to provide a variable capacity rotary compressor of high efficiency requiring a minimum of power under all conditions.

Other objects and the nature and advantages of the invention will be apparent from the following description taken in conjunction with the accompanying drawings, wherein:

Fig. 1 is a view in cross section of a preferred form of my invention;

Fig. 2 is a sectional view taken along line 2—2 of Figure 1, looking in the direction of the arrows;

Fig. 3 is a sectional view taken along line 3—3 of Figure 1, looking in the direction of the arrows;

Figs. 4 and 4a are diagrammatic illustrations of the preferred form of control incorporated in my device;

Figs. 5 and 5a are diagrammatic illustrations of a modified form of control construction; and

Figs. 6 and 6a are diagrammatic illustrations of another modified form of control construction.

Referring to the drawings, the casting 10 comprising the bearing support for my new compressor unit, is associated at one of its ends with a supplementary casting 11 which houses a pair of ball bearings 12 and 13 and a bellows type seal 14. At the other end of the casting 10 a bell shaped casing 15 is associated therewith and among other functions attributed to it, houses the compressor cylinder 16 and end plate 17.

Though the shaft 18 may be arranged to be directly driven by an electric motor or other prime mover I have here shown a pulley 19 secured to the shaft 18, which pulley is adapted to be driven by a V belt which is associated with the driving shaft of an electric motor or gasoline engine not shown. The bearing 13 and grease seal 20 are arranged to receive lubricant from a source external to the system described in a conventional manner such as, for example, from a grease cup not shown.

To provide lubrication for the remaining parts, the lower portion of the bell casing 15 is supplied with oil when the compressor is first set up for duty, which oil is arranged to be under the discharge pressure of the compressor and in normal operation is forced up through tube 21 through the center bore 22 of end plate 17, then through the bore 23 within the driven shaft 24, through metering plug 25, which permits only a measured quantity of lubricant to pass therethrough, and then onto gears 26 and 27. By centrifugal force lubricant is thrown outwardly and some of it passes through the openings 28 within gear 26 and is caught in the depression 29 from whence it flows through bore 30 to the bellows seal 14 and ball bearing 12, effecting lubrication of same. The remainder of the oil which is not caught in crevice 29, falls to the sump 31 and collects therein until its level reaches the lower portion of suction tube 32, at which time it is sucked upwardly together with the gas to be compressed which finds its way into chamber 33 through inlet 34, to the suction side of the compressor 35 wherein gas is compressed and is discharged together with lubricant to the chamber 36 within the casing 15.

To insure thorough lubrication of the external surface of the driven shaft 24 as it rotates within bearing 37 which may be made of bronze, Babbitt metal, or any suitable bearing material, a passage or bore 38 is arranged within the driven shaft 24 leading from the bore 23 to the external surface of the driven shaft 24, where by means of spiral grooves 39, lubricant is conveyed to passages 40 thereby lubricating the external surface of the eccentric bushing member

41 which cooperates with the internal surface of the casting 10.

The compressor 35, shown in Figure 2, comprises a cylinder 16 and a rotor element 42 cooperating therewith and provided with spring pressed vanes 43 which are urged outwardly to the inner surface of cylinder 16 by springs 44. The cylinder 16 is provided with an inlet conduit 45 and a discharge outlet 46, whereby when the rotor element 42 is rotated, gas to be compressed enters a space between the rotor element 42, the cylinder 16, and the two adjacent sliding vanes 43 and when the two mentioned sliding vanes are then rotated to a position adjacent the discharge passage 46, the gas is compressed and forced out of the cylinder 16. This action repeats itself and is continuous as long as the rotor rotates. When lubricant within the sump 31 reaches the bottom of the suction tube 32, lubricant is sucked therethrough into the inlet conduit 45 which leads to the compressor 35, as shown by the horizontal dotted lines in the upper central portion of Fig. 1. When the lubricant level within the sump 31 is below the lower part of the suction tube 32, mere refrigerant to be compressed is sucked therethrough and reaches the compressor 35 by means of the conduit 45. The discharge outlet 46 communicates with the chamber 36, already referred to, permitting the oil to separate from the compressed gas and drop to the bottom of the casing 15 from whence it may be again picked up through the tube 21 and circulated through the system. The released compressed gas then finds its way up into the dry pipe 47 through openings 48 in the bottom thereof, through check valve 49 to a place of use or a storage tank, not shown. While it is conceivable that the apparatus might be used as an air compressor, or other gas or liquid compressor or pump, it has been especially designed for use with volatile refrigerants, such as methyl chloride, for example.

It is found in practice that in installations utilizing compressed gaseous fluid and incorporating continually operated compressors, for certain periods at least, continued full load operation of the compressor is unnecessary and wasteful of power. In the instant apparatus I have provided a control to affect the capacity of the compressor, though continuously operating same, which comprises a bellows 50, see Figure 3, one end of which is connected by a pipe 51 to the discharge side of the compressor whereby the bellows is responsive to the discharge pressure. This bellows 50 is operatively associated with horizontally movable link 52, the movement of which toward the bellows 50 is to some extent controlled by the position of the adjustable stop screw 53, to effect a predetermined relative position of the rotor 42 with respect to the cylinder 16, as will be later described. Control of the movement of the bellows 50 is effected by means of a spring 55 which directly engages the link 52 and is mounted within the casting 10 for adjustment by means of knurled screw 56 which is manually operable as shown in Figure 3, or may be automatically controlled by means of a thermostat (not shown) which effects the compression of the spring 55 in accordance with the temperature of the air cooled by an evaporator of a system incorporating my compressor as an element thereof. It is conceivable, of course, that other automatic controls not shown might be utilized to effect the compression of the spring 55.

Horizontal movement of the link 54 effects oscillation of the member 57 with corresponding partial rotation of the eccentric bushing 41 which varies the location of the center of driven shaft 24, which in turn affects the capacity of the compressor 35 by shifting the rotor 42 from the position shown in Figure 4 to that shown in Figure 4*a*. This shifting of the rotor increases the volume on the discharge side of the compressor thereby cutting down compression and at the same time cutting down the energy required to drive the compressor under this varied location of the compressor element 42 with respect to the cylinder 16.

This mode of operation of the control to affect the capacity of the compressor is attributable to the contours and arrangement of the eccentric bushing element 41.

To effect a similar result, that is, to vary the output of the compressor in accordance with the pressure conditions within bellows 50, I may construct and arrange the eccentric bushing element 41*a* as illustrated in Figures 5 and 5*a* whereby when the member 57*a* is oscillated in response to pressure conditions, the rotor 42*a* is moved directly downwardly from its sealing position as illustrated in Figure 5 to that shown in Figure 5*a*.

In a further modified form the output or capacity of the compressor is varied in accordance with pressure conditions within the bellows 50 by a construction and arrangement of the eccentric bushing element 41*b* as shown in Figures 6 and 6*a*. In this embodiment, upon oscillation of the element 57*b* the driven shaft 24*b* is moved to a position such that the rotor 42*b* is moved both down from its sealing position and also away from same in a counter-clockwise direction to effect a position between that illustrated in Figures 4*a* and 5*a*.

Though the driving shaft 18 transmits its motion through the medium of gears 26 and 27, it is to be understood that I may utilize other transmission means, such as for example, a pair of universal joints which will transmit rotation from the shaft 18 to the shaft 24, though they are out of alignment. With the arrangement as illustrated in Figure 1, however, positive driving means is effected in every position of the shaft 24 with respect to the shaft 18, and meshing engagement takes place between a section of the teeth of gear 26 with the corresponding section of the teeth of gear 27 though these sections vary with the position of the eccentric bushing 41, which in turn is controlled by the pressure within the bellows 50 and may be modified by an adjustment of the compression of the spring 55 either manually, as by adjustment of knurled screw 56, or by automatic means not shown but described.

It will be seen from the above disclosure that the compression apparatus described is capable of efficient operation under many varying conditions and produces desired results. In practise it has been found that when the compression apparatus is driven at various speeds ranging from as low as 200 R. P. M. or even lower, to as high as 6000 R. P. M. or even higher, a substantially constant pressure was evolved with the expenditure of a minimum of energy, the controls effecting the desired relation between the rotor and the cylinder. These characteristics are especially desirable when the compression apparatus is associated directly with an internal combustion engine, such as, for example, the

motor of a conventional automobile. Though, of course, the same characteristics are particularly desirable when the apparatus is associated with other drives, such as, for example, constant speed engines or continuously operating motors.

The construction of my device is found to be advantageous in that the parts are especially rugged and so associated with each other under varying conditions of control as to make for a minimum of wear of moving parts. This last mentioned advantage may, in part, be attributed to the particularly desirable lubricating system inherent in the design of the apparatus. Not only is the apparatus efficient and long lived, but it requires a minimum of attention during operation, the controls being within the apparatus and automatic.

Under different conditions of duty, various cooling means may be associated with the compression apparatus such as, for example, systems involving cooling water, volatile refrigerants, or merely fins about which air may be arranged to pass.

It will be obvious to those skilled in the art that various changes may be made in this device without departing from the spirit of the invention and therefore the invention is not limited to what is shown in the drawings and described in the specification but only as indicated in the appended claims.

I claim:

1. In a compression apparatus, a rigid non-jointed driving shaft and a rigid non-jointed driven shaft, means for effecting relative movement of said shafts in a direction perpendicular to their axes to affect the capacity of said apparatus, continuous transmission means between said shafts comprising a pair of multi-position engaging gears, one of which being associated with said driving shaft and the other of which being associated with the driven shaft, a compressor including a cylinder and a compression element operatively mounted in said cylinder and driven by said driven shaft, said compressor also including an oil reservoir, means for subjecting said reservoir to compressor discharge pressure, oil conduit means connecting said oil reservoir with said transmission means, a bearing and a seal associated with said driving shaft, and means responsive to operation of said transmission means for effecting transfer of said oil from said reservoir to portions of said transmission means, said bearing, and said seal.

2. In a compression apparatus, a rigid non-jointed driving shaft and a rigid non-jointed driven shaft, a rotary piston mounted on said driven shaft, a stationary cylinder about said piston, transmission means between said shafts comprising a pair of multi-position engaging gears, one of which being associated with said driving shaft and the other of which being associated with said driven shaft, said compression apparatus including an oil reservoir, a bearing and seal associated with said driving shaft, means for subjecting said oil reservoir to compressor discharge pressure, conduit means connecting said oil reservoir to the exterior of said driven shaft and portions of said transmission means, passage means adjacent said transmission means for receiving oil therefrom and conducting oil to said bearing and said seal, means for returning excess lubricant from said transmission means to said oil reservoir, means for varying the position of the axis of the driven shaft to affect the capacity of said compressor and simultaneously change the position of engagement of said gears within said transmission.

CLAUDE H. NICKELL.