PCT WORLD INTELLECTUAL PROPERTY ORGANIZATION
International Bureau

INTERNATIONAL APPLICATION PUBLISHED UNDER THE PATENT COOPERATION TREATY (PCT)

(51) International Patent Classification 7 : A61F 2/06 — A1

(11) International Publication Number: **WO 00/10487**

(43) International Publication Date: 2 March 2000 (02.03.00)

(21) International Application Number: PCT/IB99/01435

(22) International Filing Date: 19 August 1999 (19.08.99)

(30) Priority Data:
09/139,957 25 August 1998 (25.08.98) US

(71) Applicant *(for all designated States except US)*: BOSTON SCIENTIFIC CORPORATION [US/US]; One Boston Scientific Place, Natick, MA 01760–1537 (US).

(71)(72) Applicant and Inventor: PARODI, Juan Carlos [AR/AR]; Blanco Encalada 1547, 1428 Capital Federal, Buenos Aires (AR).

(74) Agents: PRESTIA, Paul, F. et al.; Ratner & Prestia, 301 One Westlakes (Berwyn), P.O. Box 980, Valley Forge, PA 19482–0980 (US).

(81) Designated States: AE, AL, AM, AT, AU, AZ, BA, BB, BG, BR, BY, CA, CH, CN, CR, CU, CZ, DE, DK, DM, EE, ES, FI, GB, GD, GE, GH, GM, HR, HU, ID, IL, IN, IS, JP, KE, KG, KP, KR, KZ, LC, LK, LR, LS, LT, LU, LV, MD, MG, MK, MN, MW, MX, NO, NZ, PL, PT, RO, RU, SD, SE, SG, SI, SK, SL, TJ, TM, TR, TT, UA, UG, US, UZ, VN, YU, ZA, ZW, ARIPO patent (GH, GM, KE, LS, MW, SD, SL, SZ, UG, ZW), Eurasian patent (AM, AZ, BY, KG, KZ, MD, RU, TJ, TM), European patent (AT, BE, CH, CY, DE, DK, ES, FI, FR, GB, GR, IE, IT, LU, MC, NL, PT, SE), OAPI patent (BF, BJ, CF, CG, CI, CM, GA, GN, GW, ML, MR, NE, SN, TD, TG).

Published
With international search report.

(54) Title: GRAFT DEVICE FOR TREATING ABDOMINAL AORTIC ANEURYSMS

(57) Abstract

A stent graft device for locating inside an aorta affected by an aneurysm causing the aorta having an inner diameter smaller than the sum of inner diameters of the iliac arteries, the graft having an upper main tubular portion dividing into two pending graft limbs capable of accommodating together within the restricted inner diameter of the aorta without the restriction of the aorta affecting the diameter of the limbs, the limbs having respective distal end portions having diameters larger than the diameters of the graft limbs so as to be accommodated and retained within the iliac arteries.

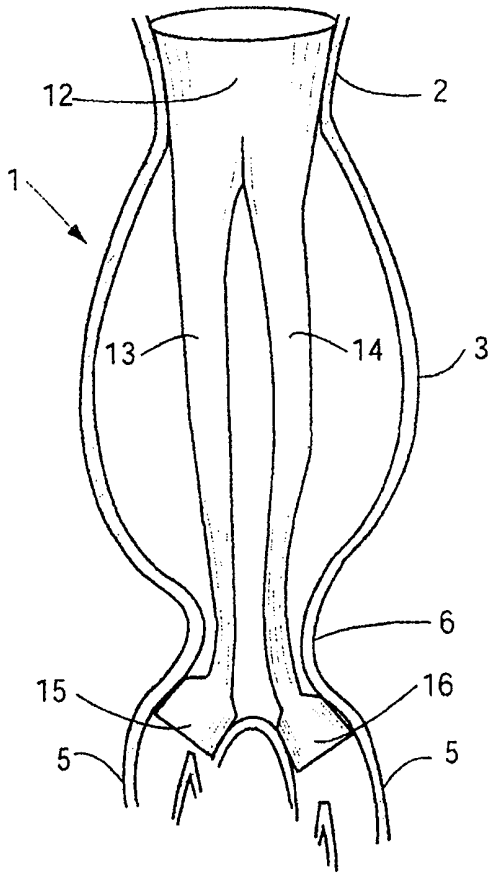

FOR THE PURPOSES OF INFORMATION ONLY

Codes used to identify States party to the PCT on the front pages of pamphlets publishing international applications under the PCT.

AL	Albania	**ES**	Spain	**LS**	Lesotho	**SI**	Slovenia
AM	Armenia	**FI**	Finland	**LT**	Lithuania	**SK**	Slovakia
AT	Austria	**FR**	France	**LU**	Luxembourg	**SN**	Senegal
AU	Australia	**GA**	Gabon	**LV**	Latvia	**SZ**	Swaziland
AZ	Azerbaijan	**GB**	United Kingdom	**MC**	Monaco	**TD**	Chad
BA	Bosnia and Herzegovina	**GE**	Georgia	**MD**	Republic of Moldova	**TG**	Togo
BB	Barbados	**GH**	Ghana	**MG**	Madagascar	**TJ**	Tajikistan
BE	Belgium	**GN**	Guinea	**MK**	The former Yugoslav Republic of Macedonia	**TM**	Turkmenistan
BF	Burkina Faso	**GR**	Greece			**TR**	Turkey
BG	Bulgaria	**HU**	Hungary	**ML**	Mali	**TT**	Trinidad and Tobago
BJ	Benin	**IE**	Ireland	**MN**	Mongolia	**UA**	Ukraine
BR	Brazil	**IL**	Israel	**MR**	Mauritania	**UG**	Uganda
BY	Belarus	**IS**	Iceland	**MW**	Malawi	**US**	United States of America
CA	Canada	**IT**	Italy	**MX**	Mexico	**UZ**	Uzbekistan
CF	Central African Republic	**JP**	Japan	**NE**	Niger	**VN**	Viet Nam
CG	Congo	**KE**	Kenya	**NL**	Netherlands	**YU**	Yugoslavia
CH	Switzerland	**KG**	Kyrgyzstan	**NO**	Norway	**ZW**	Zimbabwe
CI	Côte d'Ivoire	**KP**	Democratic People's Republic of Korea	**NZ**	New Zealand		
CM	Cameroon			**PL**	Poland		
CN	China	**KR**	Republic of Korea	**PT**	Portugal		
CU	Cuba	**KZ**	Kazakstan	**RO**	Romania		
CZ	Czech Republic	**LC**	Saint Lucia	**RU**	Russian Federation		
DE	Germany	**LI**	Liechtenstein	**SD**	Sudan		
DK	Denmark	**LK**	Sri Lanka	**SE**	Sweden		
EE	Estonia	**LR**	Liberia	**SG**	Singapore		

GRAFT DEVICE FOR TREATING ABDOMINAL AORTIC ANEURYSMS

BACKGROUND OF THE INVENTION

1. Field of the Invention.

The present invention relates to the field of percutaneous transluminal treatment of blood vessels aneurysms and, particularly refers to a modular graft device for treatment of an Aorta aneurysm by replacement or encasement of the affected Aorta wall with the inventive graft device.

2. Description of the Prior Art.

As it is well known in the art, an aneurysm is a widening or dilation of a blood vessel, artery or vein, caused by thinning of the vessel wall. The rupture of the vessel wall is a lethal complication as long as it results in massive hemorrhage. Aneurysms usually occur in arteries but may also be seen in the heart after local damage, or in veins.

Arterial aneurysms are more common than venous and they may be caused by congenital thinning of the muscular portions of the artery, during atherosclerotic degeneration

of the aorta or of the carotid or basilar arteries, by trauma to a vessel wall, by infectious injury, or by degeneration from other causes. The likelihood of rupture is increased by high blood pressure.

An aneurysm in the largest artery in the human body, the aorta, will therefore result in a very important situation. The aorta is the primary vessel carrying blood from the heart to the rest of the circulatory system. The aorta arises from the base of the left ventricle of the heart and arches over and backward to the left front side of the vertebral column, or spine. Then, it passes downward along the spine and divides into the common iliac arteries, which supply blood to the extremities.

For descriptive purposes, the aorta is usually divided into the ascending aorta, the aortic arch, the thoracic descending aorta, and the abdominal aorta. The renal arteries, mesenteric arteries, and many other branches arise from the abdominal aorta.

The walls of the aorta are quite thick and consist primarily of strong, elastic connective tissue. The distensibility of the aorta and its major branches is such that this central reservoir acts as a second heart pump.

A widely used technique for treating a patient harboring an aneurysm is the percutaneous transluminal angioplasty, generally used in the treatment of coronary heart diseases, which technique involves the widening of

the arteries that have been dangerously narrowed under the effects of the atherosclorosis, that is, by the buildup of deposits called plaque on their interior walls. A flexible tube, or catheter, is first inserted through a skin incision into an artery. The catheter is manipulated transluminally until it reaches the constriction site. A small balloon at the end of the catheter is then inflated, compressing the plaque and widening the passage. Although this procedure has been largely used since the 1970s, the PTA has been generally restricted to some vessels, coronary arteries, for example, but the use of balloons has not been entirely successful in larger vessels like the aorta because of, among other things, the strong calcification of the plaques.

In addition to the foregoing, with a ruptured aneurysm, a person my be treated with reduction of blood pressure and replacement of the weakened vessel by a graft or encasement in plastic, or mechanically stopping blood flow to or through the aneurysm.

The use of graft devices has been found successful in the treatment of abdominal aorta aneurysms where a graft device comprising an upper main portion and two pending limbs is inserted into the aorta with the main portion retained in the proximal end of the aorta and respective distal ends of the limbs are inserted and retained into the respective iliac arteries, thus replacing the aorta walls

by the graft. However, the aortic aneurysms are very often heavily calcified and strongly narrowed by the atherosclerotic plaques. Under these circumstances, and perhaps due to a side effect, the diameter of the iliac arteries tend to dilate with the result that, frequently, the diameter of the aorta, in the zone harboring the aneurysm, that is the distal aorta, is smaller than the sum of the diameters of both iliac arteries. In the practice, for example, if the distal aortic diameter is 20 mm and the iliac artery diameter exceeds 11 mm, a 12 mm iliac graft device is necessary to have the distal ends of the graft limbs inserted and retained into the respective iliac arteries. Thus, each graft limb must have a diameter of 12 mm, the graft limbs being extending into and along the distal aortic aneurysm of 20 mm, which, in addition, as stated above, is heavily calcified and rigid. Therefore, the graft limbs with 24 mm (12mm + 12mm) will be constrained under the restricted section of the aneurysm. More particularly, the exceeding 4 mm in the diameter will be compressed by the aneurysm. While the graft construction and the materials used in its manufacture make the graft device to be flexible enough to be located into the distal aorta, through the restricted section thereof, angulation and compression of the graft limbs could be responsible of the occurrence of limb occlusion and the resulting ischemia of the limbs.

In view of the foregoing it would be desirable to have a graft device capable of being easily inserted and located into a distal aorta with aneurysm, but capable also of being accommodated to the restricted section without being impaired by the smaller diameter available at the restricted section of the aorta.

3. Summary of the Invention.

It is therefore one object of the present invention to provide a stent graft device for locate inside an aorta affected by an aneurysm causing the aorta having an inner diameter smaller than the sum of inner diameters of the iliac arteries, the graft having an upper main tubular portion dividing into two pending graft limbs capable of accommodating together within the restricted inner diameter of the aorta without the restriction of the aorta affecting the diameter of the limbs, the limbs having respective distal end portions having diameters larger than the diameters of the graft limbs to be accommodated and retained within the iliac arteries.

It is still another object of the present invention to provide a stent graft device of the type to be located within an Aorta and its bifurcation into Iliac arteries, the graft comprising a proximal main tubular portion to be retained within an upper portion of the aorta, the proximal main tubular portion having a first diameter and dividing

into two tubular limbs each limb having a second diameter and a distal end portion to be located inside an associated iliac artery and held against an inner surface of the iliac artery, the distal end portion defining a third diameter larger than the second diameter, the distal end portion being merged with the associated graft limb through a transition flared portion.

The above and other objects, features and advantages of this invention will be better understood when taken in connection with the accompanying drawings and description.

BRIEF DESCRIPTION OF THE DRAWINGS

The present invention is illustrated by way of example in the following drawings wherein:

FIG. 1 shows a partial cross-sectional view of an abdominal Aorta affected by an aneurysm and including a graft device of the prior art;

FIG. 2 shows a perspective elevation view of an stent graft device devised according to the present invention;

FIG. 3 shows a partial cross-sectional view of an abdominal Aorta, similar to Fig. 1, but treated with the graft device of Fig. 2, according to the invention;

FIG. 4 shows a side view of a distal end portion of a graft limb according to the invention, with a flared

transition portion merging the limb to the distal end portion; and

FIG. 5 shows a side view, similar to Fig. 4, of a distal end portion according to another embodiment of the invention, with a conical transition portion being illustrated between the limb and the distal end portion.

DESCRIPTION OF THE PREFERRED EMBODIMENTS

Now referring in detail to the drawings it may be seen from FIG. 1 that an abdominal aorta 1 comprises an upper proximal portion 2, a distal portion 3 affected by an aneurysm 4, the aorta dividing, at the lower part thereof, into two iliac arteries 5, with a restricted section being formed at 6. To treat the affected patient, a known graft device 7 is inserted and retained into the aorta, the graft having a proximal main tubular portion 8 to be retained, by any know technique in the art, within upper portion 2 of the aorta. Portion 8 divides into two tubular limbs 9, pending from portion 8 and each limb 9 ends in a distal end 10 capable of being retained within the iliac arteries and against inner surfaces of these arteries.

As it is clear from the drawing, the restriction 6 constrains the two limbs 9 of graft 7 causing a limb occlusion and ischemia of the limb. To overcome this drawback of the prior art, the inventor has developed a new graft device as shown in Fig. 2.

According to the invention, the graft device 11, shown in Figs. 2 and 3, has a proximal main tubular portion 12 with a first diameter D1. Portion 12 divides into two tubular limbs 13, 14, pending from portion 12, each limb 13, 14 defining a second diameter D2 and ending in an enlarged distal end portion 15, 16, respectively, capable of being located and firmly retained inside an associated iliac artery 5, so as to be held against an inner surface of the iliac artery. Each portion 15, 16 defines a third diameter D3 at a larger, preferably cylindrical tubular wall thereof.

Diameter D1 generally is determined by the size and available section at portion 2 of aorta 1, as well as from the aneurysm size. The same occurs with diameters D2, D3, which are also determined based on the iliac sizes and aneurysm restriction. The graft, however, is manufactured in a limited plurality of sizes which must be accommodated to the aorta under treatment, without the different diameters being capable of being varied in a graft. To facilitate accommodation of the graft inside the aorta and to avoid the constraining situation at restriction 6, diameter D2, according to the invention, is reduced as compared to the diameters used in the prior art grafts while a new distal end portion 15, 16 is added at the end of the limbs to define a diameter D3 which is larger than diameter D2. Generally speaking, the shape of portion 15,

16 may be called as having an "Elephant Foot" appearance, with the transition between the limb diameter D2 to end portion diameter D3 being shaped in any generic flared configuration.

As it is shown in Fig. 4, a first embodiment shows that the transition or merging between a limb 13 and its distal end portion 15 may be devised through a curved trumpet-shaped transition portion 17. Fig. 5 shows another embodiment where the transition portion is a conical portion 18. In any case, distal end portion 15, 16 may be cylindrical or may have any shape provided that the end portion is sized and configured to be efficiently retained into the corresponding iliac artery, as shown in Fig. 3. The material from which the graft device of the invention may be manufactured may be the same used for the graft devices of the prior art.

While preferred embodiments of the present invention have been illustrated and described, it will be obvious to those skilled in the art that various changes and modifications may be made therein without departing from the scope of the invention as defined in the appended claims.

I CLAIM:

1. A stent graft device of the type to be located within an Aorta and its bifurcation into Iliac arteries, the graft comprising a proximal main tubular portion to be retained within an upper portion of the aorta, the proximal main tubular portion having a first diameter and dividing into two tubular limbs each limb having a second diameter and a distal end portion to be located inside an associated iliac artery and held against an inner surface of the iliac artery, the distal end portion defining a third diameter larger than the second diameter, the distal end portion being merged with the associated graft limb through a transition flared portion.

2. The stent graft device of claim 1, wherein the graft is to be located inside an aorta having an inner diameter smaller than the sum of inner diameters of the iliac arteries, the two graft limbs accommodating together within the restricted inner diameter of the aorta without the restriction of the aorta affecting the second diameter of the limbs, while the distal end portions being accommodated and retained within the iliac arteries.

3. The stent graft device of claim 1, wherein the flared transitional portion is conical.

4. The stent graft device of claim 1, wherein the distal end portion is cylindrical.

5. The stent graft device of claim 2, wherein the flared transitional portion is conical.

6. The stent graft device of claim 2, wherein the distal end portion is cylindrical.

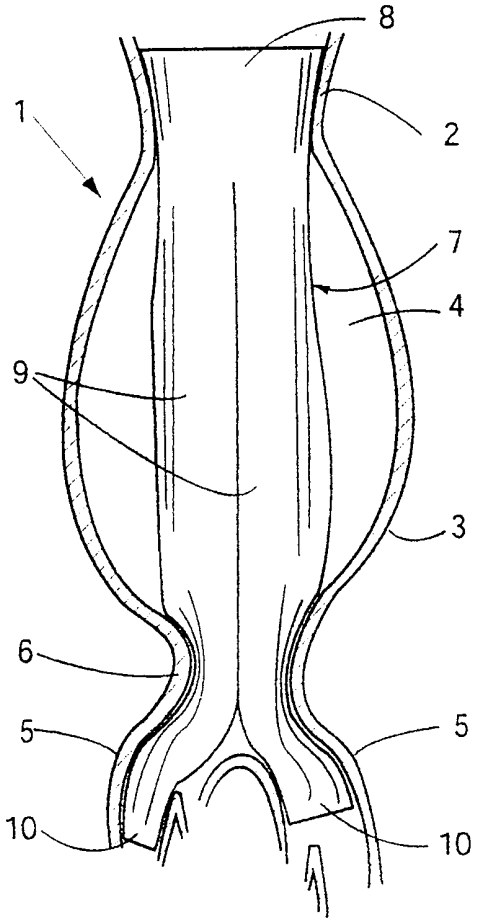

FIG. 1
PRIOR ART

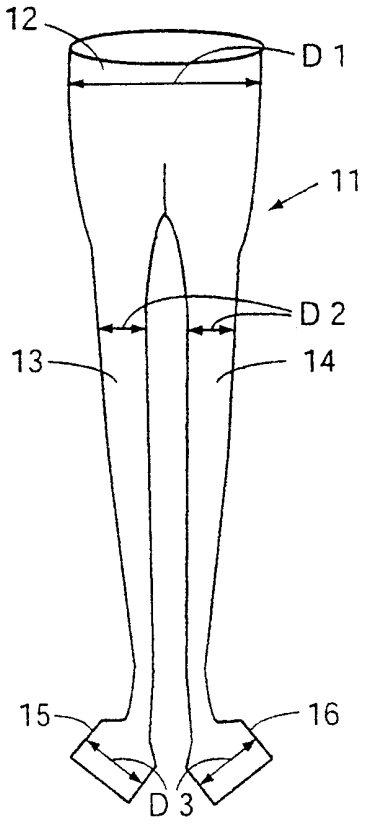

FIG. 2

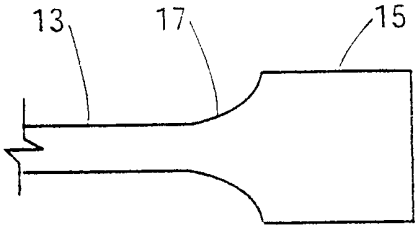

FIG. 4

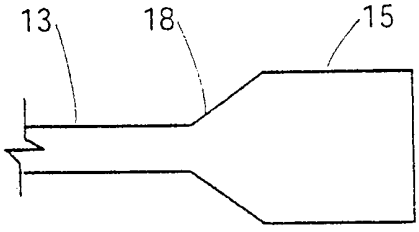

FIG. 5

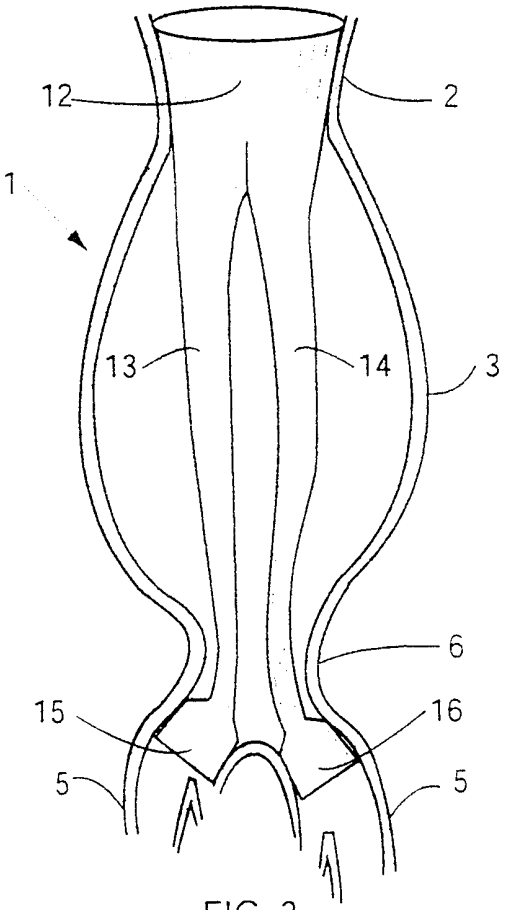

FIG. 3

INTERNATIONAL SEARCH REPORT

In' ıtional Application No
PCT/IB 99/01435

A. CLASSIFICATION OF SUBJECT MATTER
IPC 7 A61F2/06

According to International Patent Classification (IPC) or to both national classification and IPC

B. FIELDS SEARCHED

Minimum documentation searched (classification system followed by classification symbols)
IPC 7 A61F

Documentation searched other than minimum documentation to the extent that such documents are included in the fields searched

Electronic data base consulted during the international search (name of data base and, where practical, search terms used)

C. DOCUMENTS CONSIDERED TO BE RELEVANT

Category °	Citation of document, with indication, where appropriate, of the relevant passages	Relevant to claim No.
X	WO 97 17910 A (ENDOGAD RESEARCH PTY LIMITED ;WHITE GEOFFREY H (AU); YU WEIYUN (AU) 22 May 1997 (1997-05-22) figure 9 page 8, line 12 - line 27	1-6
X	FR 2 756 173 A (MARCADE JEAN PAUL) 29 May 1998 (1998-05-29) figures 16,20,21 page 9, line 1 - line 23 claims 6-11,13,15	1,2,5,6
A	WO 98 27895 A (PROGRAFT MEDICAL INC) 2 July 1998 (1998-07-02) figure 29A page 45, line 24 -page 46, line 12	1,2,4

☐ Further documents are listed in the continuation of box C.

☒ Patent family members are listed in annex.

° Special categories of cited documents :

"A" document defining the general state of the art which is not considered to be of particular relevance

"E" earlier document but published on or after the international filing date

"L" document which may throw doubts on priority claim(s) or which is cited to establish the publication date of another citation or other special reason (as specified)

"O" document referring to an oral disclosure, use, exhibition or other means

"P" document published prior to the international filing date but later than the priority date claimed

"T" later document published after the international filing date or priority date and not in conflict with the application but cited to understand the principle or theory underlying the invention

"X" document of particular relevance; the claimed invention cannot be considered novel or cannot be considered to involve an inventive step when the document is taken alone

"Y" document of particular relevance; the claimed invention cannot be considered to involve an inventive step when the document is combined with one or more other such documents, such combination being obvious to a person skilled in the art.

"&" document member of the same patent family

Date of the actual completion of the international search	Date of mailing of the international search report
1 November 1999	09/11/1999

Name and mailing address of the ISA	Authorized officer
European Patent Office, P.B. 5818 Patentlaan 2 NL – 2280 HV Rijswijk Tel. (+31–70) 340–2040, Tx. 31 651 epo nl, Fax: (+31–70) 340–3016	Mary, C

1

Form PCT/ISA/210 (second sheet) (July 1992)

INTERNATIONAL SEARCH REPORT

Information on patent family members

International Application No
PCT/IB 99/01435

Patent document cited in search report	Publication date	Patent family member(s)	Publication date
WO 9717910 A	22-05-1997	AU 7486296 A	05-06-1997
		AU 706084 B	10-06-1999
		AU 7486396 A	05-06-1997
		AU 7486496 A	05-06-1997
		WO 9717911 A	22-05-1997
		WO 9718006 A	22-05-1997
		CA 2236602 A	22-05-1997
		CN 1207658 A	10-02-1999
		CN 1207659 A	10-02-1999
FR 2756173 A	29-05-1998	WO 9822043 A	28-05-1998
WO 9827895 A	02-07-1998	AU 5791798 A	17-07-1998