May 2, 1933. R. H. VANSANT 1,907,021

WINDOW CLOSURE

Filed Oct. 27, 1930 4 Sheets-Sheet 1

Fig. 1.

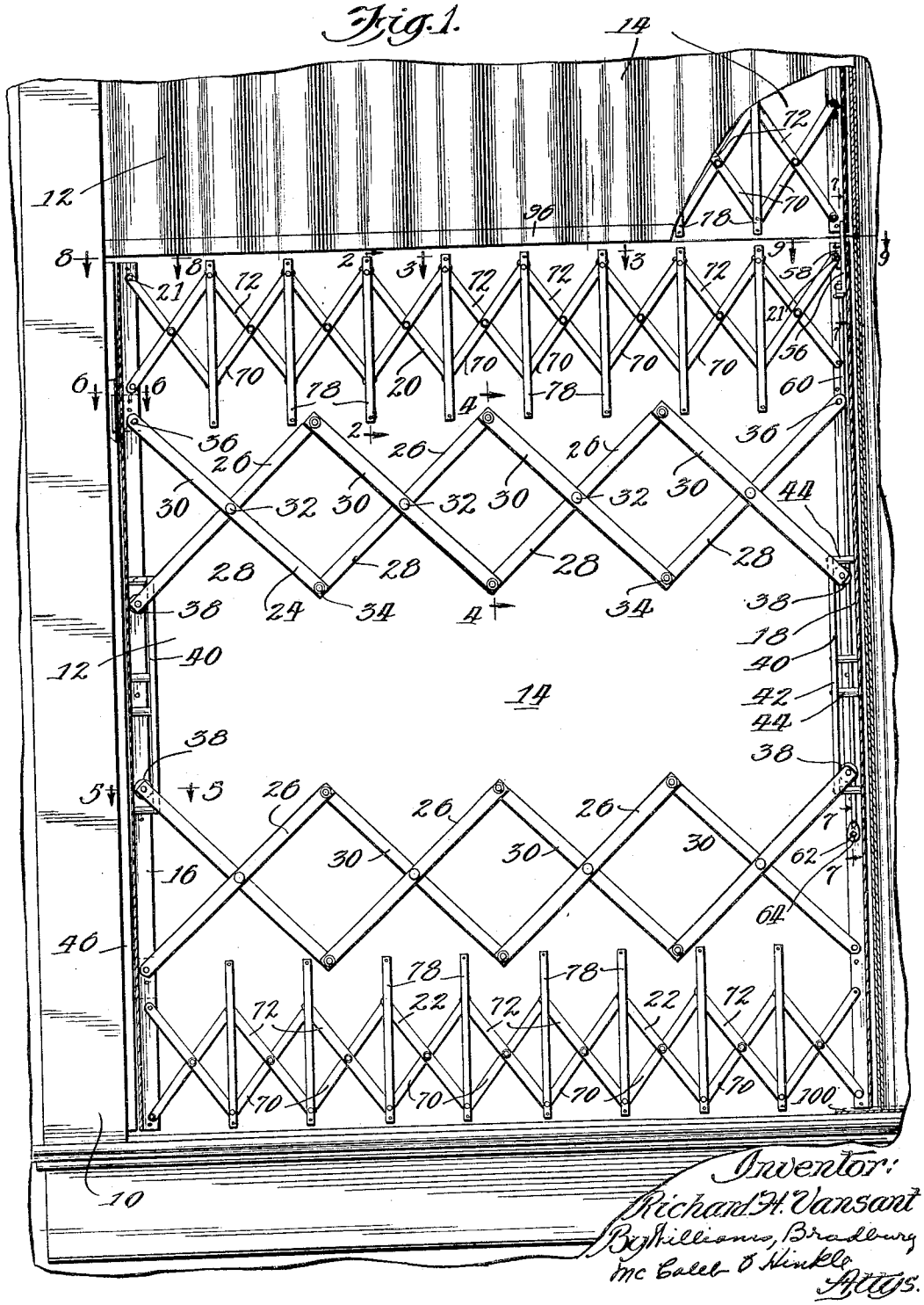

Inventor:
Richard H. Vansant
By Williamson, Bradbury
McCall & Winkler
Attys.

May 2, 1933. R. H. VANSANT 1,907,021

WINDOW CLOSURE

Filed Oct. 27, 1930 4 Sheets-Sheet 2

Fig. 2.

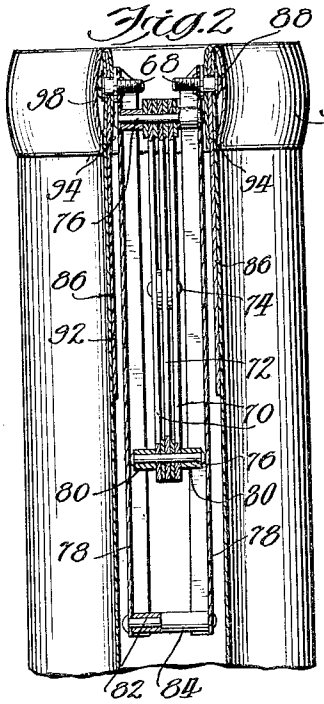

Fig. 4.

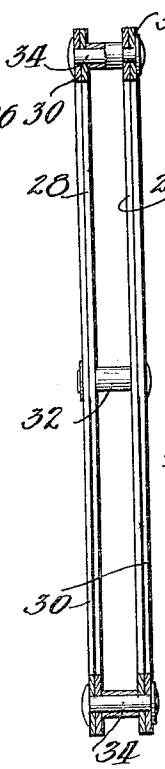

Fig. 5.

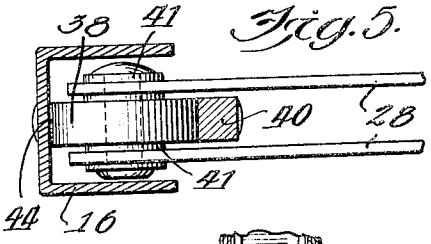

Fig. 7.

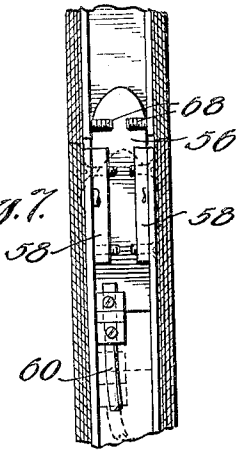

Fig. 3.

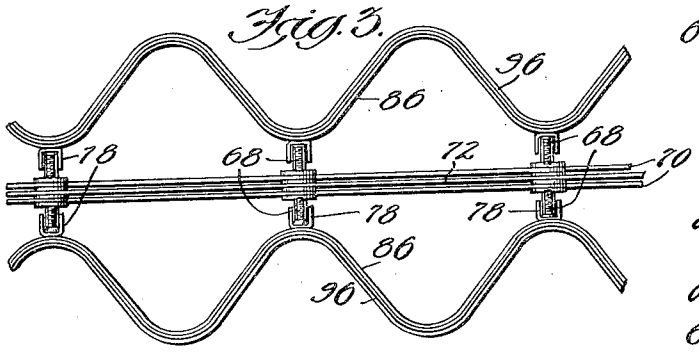

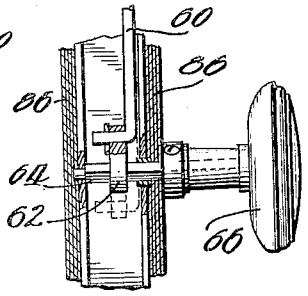

Fig. 6.

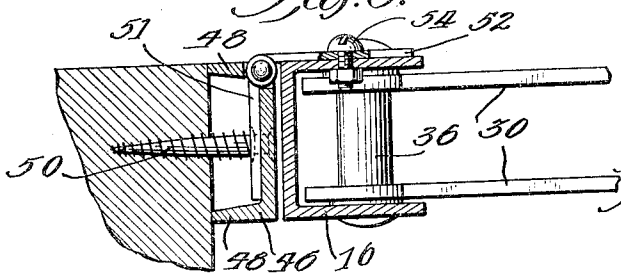

Inventor:
Richard H. Vansant
By Williams, Bradbury
McCaleb & Hinkle.
Attys.

May 2, 1933. R. H. VANSANT 1,907,021

WINDOW CLOSURE

Filed Oct. 27, 1930 4 Sheets-Sheet 3

Fig. 8.

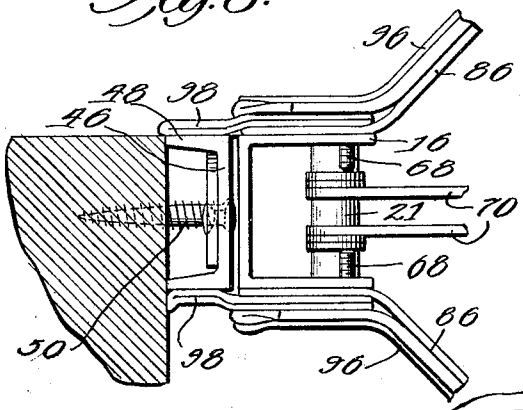

Fig. 9.

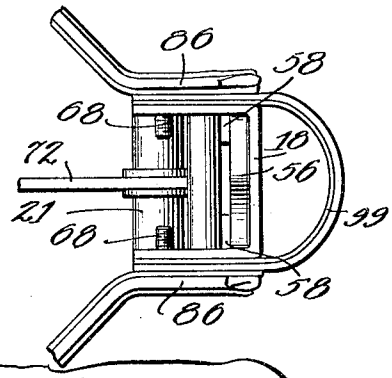

Fig. 14.

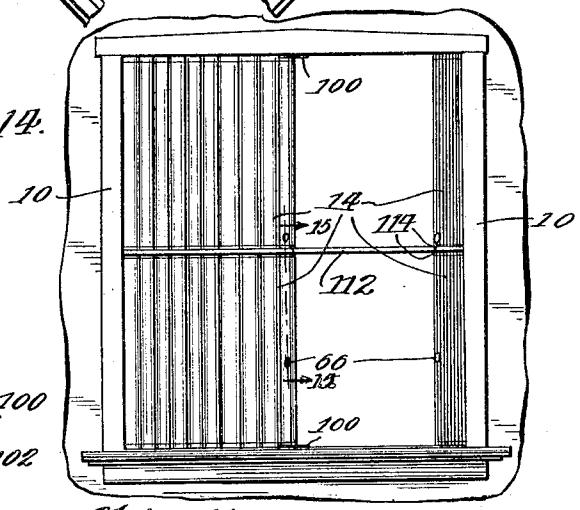

Fig. 10.

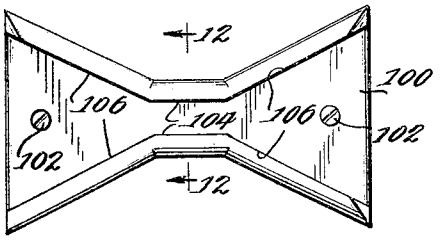

Fig. 11.

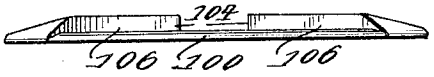

Fig. 13.

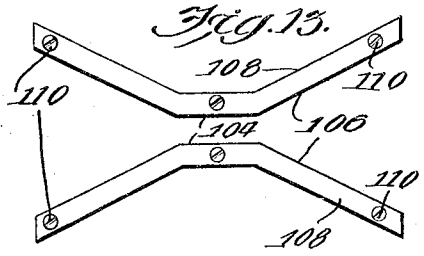

Fig. 12.



Inventor:
Richard H. Vansant
By Williams, Bradbury
McCaleb & Hinkle
Attys.

May 2, 1933. R. H. VANSANT 1,907,021

WINDOW CLOSURE

Filed Oct. 27, 1930 4 Sheets-Sheet 4

Fig. 16.

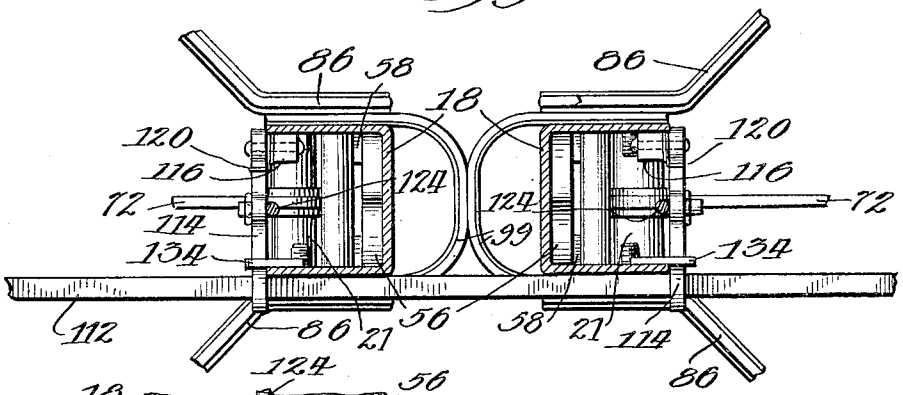

Fig. 15.

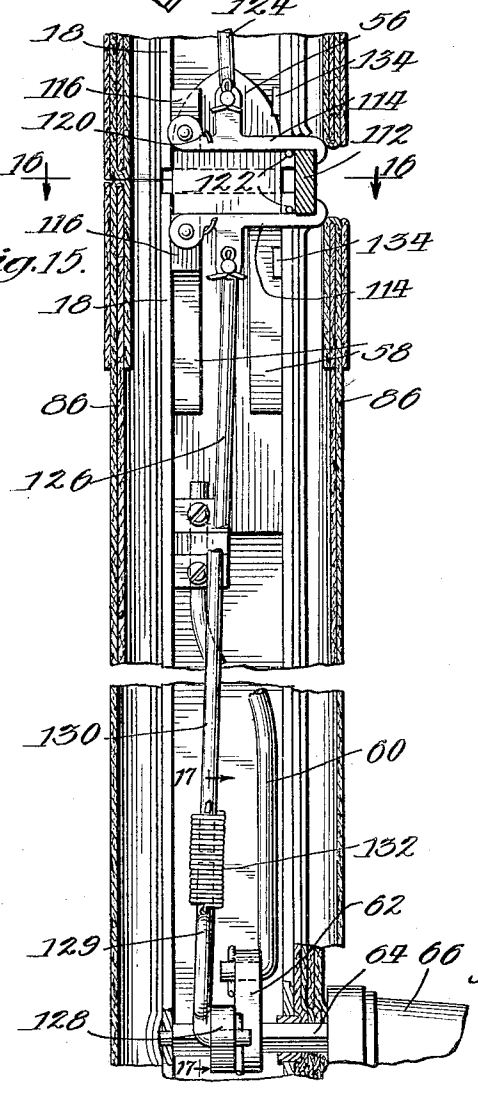

Fig. 17.

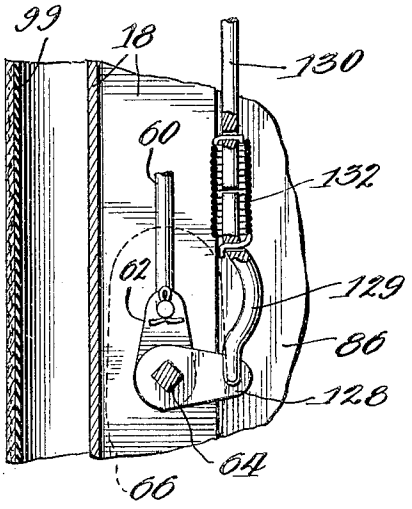

Inventor:
Richard H. Vansant
By Williams, Bradbury,
McCaleb & Hinkle.
Attys.

Patented May 2, 1933 1,907,021

UNITED STATES PATENT OFFICE

RICHARD H. VANSANT, OF CHICAGO, ILLINOIS

WINDOW CLOSURE

Application filed October 27, 1930. Serial No. 491,389.

The present invention relates to window closures, and is more particularly concerned with the provision of collapsible window closures provided with decorative coverings adapted to harmonize with the color scheme of the surroundings.

One of the principal features of my invention lies in the fact that the window closures may be pivotally swung outwardly or inwardly as desired or they may readily be folded or collapsed into a very small space when it is desired to have the entire window frame uncovered.

In providing window closures for large windows such as those used in department stores, gymnasiums, office buildings, churches, etc., it is frequently desirable to attach the window closures along the lateral walls of the window frame so that they may be extended toward the center to provide a complete closure for the window.

In window closure installations of this type it is desirable to extend the decorative covering of the window closure frame above and below the edges of the framework. Because of the fact that the window closures are collapsible or foldable, it has been found very impractical to place a decorative covering over the upper or lower end of the closure member, and as a result thereof the extensible framework which may comprise a collapsible link mechanism would ordinarily be plainly visible when the closure is swung outwardly in an extended or partially extended position. To present a more attractive appearance I have provided an improved fastening for the decorative covering which extends beyond the edges of the extensible link mechanism and conceals the same from view.

It is an object of my invention to provide a new and improved closure for windows.

It is a further object of my invention to provide, in a window closure installation having closure members mounted above each other, means associated with one closure member for connecting with the other closure member to move both closure members as an integral unit.

It is a further object of my invention to provide means associated with the window frame for rigidly supporting said closure members against pivotal movement in an extended position.

A further object of my invention is the provision of guide and locking means associated with the window frame for preventing movement of the closures in an extended position without manual effort.

A further object of my invention is the provision of means operable only from the inside of the room for releasing the closure members in an extended or partially extended position for pivotal movement.

A further object is the provision of improved locking means for foldable closures.

Other objects and advantages will be more readily apparent from the following description and from the accompanying drawings, in which similar reference characters indicate similar parts throughout the several views.

Referring to the drawings, of which there are four sheets:

Fig. 1 is a front elevational view of a fragment of a window illustrating one of the closure members of my invention with the outer covering removed and a fragment of another with a portion of the covering removed;

Fig. 2 is an enlarged vertical sectional view taken on the line 2—2 of Fig. 1 through the upper extensible link mechanism and associated parts;

Fig. 3 is a fragmentary plan view of one of the window closures;

Fig. 4 is a vertical sectional view through an intermediate supporting linkage taken on the line 4—4 of Fig. 1;

Fig. 5 is a horizontal sectional view taken on the line 5—5 of Fig. 1;

Fig. 6 is a horizontal sectional view taken on the line 6—6 of Fig. 1, illustrating the manner in which the closure member is hingedly secured to the window frame;

Fig. 7 is a fragmentary vertical sectional view through an extended frame member taken on the line 7—7 of Fig. 1 and illustrating the lock details;

Fig. 8 is an enlarged fragmentary plan view of the portion of the window closure adjacent the hinge;

Fig. 9 is an enlarged fragmentary plan view of a portion of the window closure adjacent the extended end;

Fig. 10 is a plan view of the guiding and holding means secured to the window sill;

Fig. 11 is a side elevational view thereof;

Fig. 12 is a sectional view thereof taken on the line 12—12 of Fig. 10;

Fig. 13 is a plan view of a modified form of guiding and holding means;

Fig. 14 is an elevational view of a window frame provided with four closure members;

Fig. 15 is an enlarged fragmentary vertical sectional view taken on the line 15—15 of Fig. 14.

Fig. 16 is a fragmentary plan sectional view taken on the line 16—16 of Fig. 15; and

Fig. 17 is a fragmentary vertical sectional view taken on the line 17—17 of Fig. 15.

Referring now more particularly to the drawings, in Fig. 1 I have shown a window frame 10 which is preferably rectangular in shape, in which are hingedly mounted a plurality of window closures 12. Each of the window closures 12 may include generally an outer covering 14 which may be mounted on either or both sides of the framework. The framework of the window closure member may comprise the back frame U-shaped side frame member 16 and the front frame U-shaped side frame member 18, connected at their upper and at their lower ends by a pair of supporting linkages 20 and 22.

To provide the extreme rigidity which a closure of this type requires, an additional pair of supporting links 24 and 26 are provided between the upper and lower supporting linkages. The supporting links 24 and 26 may comprise a plurality of links pivoted at their midpoint or at similar points to form pivoted parallelogram linkages and may be of a suitable size to furnish the required rigidity for the closure, depending entirely upon the size and weight of the closure for which they are to be employed. Generally these linkages may consist of the pairs of parallel links 28 and 30 pivotally secured together at their mid points and at their ends upon the pivots 32 and 34. As shown on the drawings, the upper ends of the links 28 and 30 are pivotally mounted on the end frame members 16 and 18 upon the pivots 36. The lower ends of the end links 28 and 30 are each provided with a roller 38 mounted on a bearing pin 39 and lying between the pair of links suitably spaced by washers 41.

Roller 38 is arranged to be guided in a vertical plane throughout its movement upon the track 40. The track 40 is securely supported upon the inside face of the frame member 16, and the frame member 18 and may comprise a bar 42 positioned in the path of roller 38 and spaced away from the end frame member the desired distance by the spacers 44.

As is readily apparent from the drawings, the brace member 26 is similar to the brace member 24, the parts being merely in an inverted position, and the bar 40 is of a sufficient length to provide a track means for both roller 38 of upper brace member 24 and roller 38 of the lower brace member 26. Inasmuch as the brace members are similar, the lower brace member will not be further described in detail.

The back frame member 16 is arranged to be pivotally supported by a channel-shaped upright 46 (Fig. 6), which is placed with its legs 48 facing the window frame, and is secured thereto by screw members 50 suitably placed to rigidly support the upright. A pair of hinges 51 are fastened to the upright 46, being positioned near the lower and upper ends of a window closure 12 and having a hinge plate 52 extending outward from the upright. The back frame member 16 is fastened to hinge plates 52 by suitable bolts 54, and lies adjacent the upright in a normal position.

Thus it will be seen that the window closure may be swung outwardly and lie parallel with the wall if desired.

Means for locking two window closures together are provided and include a lock bolt 56 slidably mounted in guides 58 in the upper end of front frame member 18 of a lower closure member 12. An operating rod 60 is attached to the lower end of lock bolt 56 and extends downwardly and is pivotally secured at its lower end to a plate 62. Plate 62 is eccentrically carried by a non-circular bar 64 which extends through the side walls of frame member 18. An operating handle or knob 66 is fixedly attached to bar 64 on one side of the window closure. By turning the handle 66 to the right or left, the bolt 56 will either be extended beyond the upper edge of frame member 18 or withdrawn. When the bolt is extended, it rises in the lower end of frame member 18 of the upper window closure between the front wall thereof and the covering fastening screws 68, and in this position when the lower closure is moved outwardly or inwardly, it will carry the upper closure member along, thus providing in effect a single closure unit.

The linkages 20 and 22 which are similar may comprise the double link plates 70 and single link plates 72, pivotally secured together at their mid points on pins 74, and at their ends on pins 76. These linkages are pivotally secured to the frame members 16 and 18 upon suitable pivots 21.

The upper pivot pins 76 of the upper linkage 22 and the lower pins 76 of the lower linkage 20 each support on opposite sides a U-shaped combined guide and covering support 78. The opposite end pivots 76 extend into the U-shaped support and are provided

with cylindrical rollers 80 which frictionally bear against the side walls of the support, thus insuring a smooth vertical travel for the pivots. Supports 78 are fastened together at the end opposite to pin 76 by a rivet 82, which carries a spacer washer 84 separating the supports the desired distance.

As shown in Fig. 2, which is a view through the upper extensible link mechanism 20, the supports 78 extend upward beyond the pivots 76. This is to provide a support beyond these pivots for the covering 86. The covering 86 may be leather, velour, or any desirable material that harmonizes with the interior decorating of a room in which it is desired to use the closure members. It is provided with eyelets 88 along its upper and lower edges through which the fastening screws 68 are placed. Screws 68 screw-threadedly engage in tapped holes 90 in the supports 78.

In the particular embodiment shown, the covering 86 may comprise a single thickness of leather, reinforced at its upper and lower ends by a narrow strip of comparatively stiff buckram 92, over which the leather overlaps slightly as at 94. This buckram is folded to the shape it assumes when a closure member is in collapsed position, and being somewhat resilient it will tend to flex the leather in the same lines when the member is collapsed, thus insuring a neat appearing folded closure member. A narrow finish strip 96 is sewed to the covering 86 along its upper and lower border, and after the covering is attached to the supports the edge is sewed to the edge of the covering, giving a finished appearance to the covering and effectively concealing all of the connecting means.

As seen in Figs. 8 and 9, a lateral finish strip 98 is secured to the covering on both sides of the upright 68 which normally conceals the upright from view. Similarly, a U-shaped lateral edge strip 99 is secured to the covering around the outer edge of frame member 18.

Means for guiding and locking the closure members in an extended position are provided, and may comprise a guiding and holding plate 100, secured upon the top of the lower window sill or on the bottom of the top window frame member by suitable screws 102. The plate 100 is formed with parallel upright side walls 104 spaced so that a channel member 18 may slidably fit therebetween. These parallel walls are of a sufficient length so that the extended frame members 18 of a pair of window closures secured on opposite lateral walls of a window frame may be extended and positioned therebetween. Walls 104 are continued toward each side as converging walls 106, and serve to guide the frame member 18 toward walls 104 when a closure member is not extended in a straight line. When the closure members are extended and the frame members 18 are positioned between walls 104, obviously pivotal movement of the closure members is effectively prevented.

A modified form of guide plate is illustrated in Fig. 13, which comprises a pair of similarly shaped bars 108. These bars are secured to the window sill by screw members 110. It can readily be seen that the same walls 104 and 106 are presented by this arrangement and the guide operated in a manner similar to that shown in the modified form. However, with the closure members pivoted to swing only inwardly or only outwardly, only one member 108 may be employed.

In Figs. 14 to 17, I have illustrated means for locking extended or partially extended window closures against positive pivotal movement. This means may include a rigid bar 112 horizontally extending from side to side of the lateral frame members of the window. The bar 112 is positioned on the inner side of the window closures where the window closures are adapted to swing outwardly, as illustrated in the drawings. A latch member 114 is pivotally mounted in each window closure upon a suitable bracket 116 secured to the inner face of one of the legs of the extended frame members 18.

A spring member 120 is provided between each bracket and its corresponding latch member and arranged to normally urge the upper latches 114 downwardly and the lower latches 114 upwardly. Pins 122 secured in the legs of the upright frame members 18 limit the forward movement of each of the latch members. Each latch member of the upper window closure members is arranged to be operated by a rod 124 pivotally secured to the latches 114 and extending upward therefrom where it is suitably connected to a knob 115 which is positioned on the side of the closures. The lower latches 114 are connected through a suitable rod 126 with an actuating lever 128 non-rotatably secured to the shaft 64 of the knob 66. The rod 126 is in two parts, and a resilient connection is provided between the portion 129 and the portion 130 thereof by means of the coil spring 132, for a purpose to be hereinafter described.

With the arrangement shown in the drawings, when it is desired to lock a window against intrusion from the outside, the window is pivotally swung towards the bar 126 and the latch 114 will be cammed over the edge of bar 112 and securely lock the window closure in position. When it is desired to unlock the latch 114 from the bar 112, a slight turn of the handle 66 will rotate lever 128 and through the medium of rod 126 the latch will be lowered away from the bar 112 and the window closure may be swung outwardly. As will be apparent, the rod 126 which operates the latch is operably connected to the door knob 66 through which

the locking bolt 56 is actuated. When the locking bolt 56 is actuated, the knob 66 is rotated to a far greater extent than is necessary to unlock latch 114. Consequently, a resilient connection is required in the operating rod 126 so that the latch 114 will not be rotated an impractical distance during an unlocking operation. I also provide stop members 134 secured to the frame members 18 to limit the outward movement of latches 114. The outer coverings 86 have been foreshortened on the front side of the closures (Fig. 15) to allow the closures to clear the cross bar 112 as they are swung inwardly or outwardly.

From the foregoing description it will be obvious that cross bars 112 may be located both across the center of the window closures, as shown, and at the upper edge thereof or the lower edge thereof, or at all three places or any combination thereof desired. Where a single window closure is provided, it would be preferable to have a single bar either at the top or at the bottom of the closure. It will be seen that by the use of the cross bar 112, the window closure may be effectively locked against outside intrusion and the window closure can also be locked against pivotal movement in any partially extended position.

From the foregoing description it will be apparent that a novel window closure has been provided. In the usual installation in which four closure members are used, it can readily be seen that the pairs of closure members attached to the lateral walls of the window frame may be operated in unison, or the upper window closure may be moved outwardly by the lower window closure and then the lock bolt may be unhooked therefrom and the lower window closure may be collapsed. It will further be apparent that either the upper two closure members may be held against pivotal movement in an extended position or the lower two closure members may be held against pivotal movement, or both upper and lower may be held, closing the window against intrusion from the outside.

While I have illustrated and described a preferred embodiment of my invention, it will of course be understood that modifications and changes may be made without departing from the spirit of the invention, and what I desire to protect by Letters Patent of the United States is:

1. In combination, a supporting frame, a plurality of frame members hingedly positioned therein along lateral walls of said supporting frame, extensible supporting means between the upper and lower ends of said frame members, means operable from the side of said frame members for interlocking pairs thereof, and foldable closure members upon said frame members, said frame members adapted to be swung open laterally or collapsed upon themselves to permit access to said supporting frame.

2. A closure installation comprising a supporting frame, a plurality of extensible closure members pivotally and extensibly mounted above one another upon a vertical side member of said frame, and means on one closure member for interlocking said members to be moved as a unit.

3. A closure installation comprising a supporting frame, a pair of extensible closure members pivotally and extensibly mounted above one another upon a vertical frame, means on one closure member for attachment to the other to lock said members together to be moved as a unit, and guiding and holding means on said supporting frame for supporting said closure members in an extended position against pivotal movement.

4. A closure installation comprising a supporting frame, a pair of extensible closure members pivotally and extensibly mounted above one another upon a vertical frame, means on one closure member for attachment to the other to lock said members together to be moved as a unit, a horizontal bar extending across the supporting frame, and means on said closure members cooperating therewith to lock said closures against pivotal movement in any extended position.

5. A closure installation comprising a supporting frame, a plurality of extensible closure members pivotally and extensibly mounted on the vertical frame members of said supporting frame, and locking means on said supporting frame for securing said closure members in an extended position.

6. A closure installation comprising a supporting frame, a plurality of extensible closure members pivotally and extensibly mounted on the vertical frame members of said supporting frame, and locking means on said supporting frame for securing said closure members against pivotal movement.

7. A closure installation comprising a supporting frame, an upper and a lower extensible closure member pivotally and extensibly mounted on each vertical frame member of said supporting frame and means for locking together the upper and lower closure members mounted on each vertical frame member, to be operated as a single unit.

8. A closure installation comprising a supporting frame, an upper and a lower extensible closure member pivotally and extensibly mounted on each vertical frame member of said supporting frame, and means for securing both sets of closure members in an extended position.

9. In an extensible closure framework, the combination of a pair of rigid lateral frame members with a pair of extensible

frame members, said extensible frame members joining the ends of said lateral frame members to form an extensible framework, a plurality of lateral covering supports carried by said extensible frame members, and a flexible covering attached to said lateral supports.

10. In an extensible closure, the combination of a pair of rigid lateral frame members with a pair of extensible frame members, said extensible frame members joining the ends of said lateral frame members to form an extensible framework, a pair of supporting extensible linkages connecting said lateral frame members spaced between said end extensible frame members, lateral covering supporting members supported by said end extensible frame members, and an extensible covering for said framework comprising a flexible member tensioned between uniformly spaced points of support on said covering supporting members.

11. A framework for a foldable closure comprising a pair of U-shaped upright frame members, a collapsible link mechanism connecting the upper ends of said frame members, a similar link mechanism connecting the lower ends of said frame members, a pair of collapsible cross brace elements secured to said upright frame members between said end link mechanisms, upright supporting members pivotally secured to the upper pivots of said upper link mechanism, and a similar upright supporting member pivotally secured to the lower pivots of said lower link mechanism, and means secured thereto for supporting a flexible covering with its edge above the upper end of said upper link and below the lower end of said lower link mechanism.

12. In a foldable closure member, the combination of upright frame members, an upright supporting post, one of said upright frame members hingedly secured to said post, a collapsible link mechanism connecting the upper ends of said frame members, a similar link mechanism connecting the lower ends of said frame members, a collapsible cross brace member having one end pivotally connected on each frame member, the opposite end of said brace slidable in guides in said frame members, guide means in said frame members, and a flexible covering material enclosing said frame member and attached to supports carried by said upper link mechanism above said link mechanism and to supports carried by said lower link mechanism below said link mechanism and along each frame member.

13. In a closure installation, a supporting frame, a plurality of extensible closure members hingedly mounted on lateral walls of said supporting frame, said closure members including a pair of rigid lateral frame members, a pair of extensible frame members joining the ends of said lateral frame members to form an extensible framework, a pair of bracing linkages connecting said lateral frame members at intermediate points between said extensible frame members and adapted to support the weight of said framework from one edge thereof, an extensible covering for said framework, and a guide element positioned on said supporting frame intermediate the lateral walls of said supporting frame to engage an extended lateral frame member to secure said extensible closure in an extended position.

14. In a closure installation, a supporting frame, a plurality of extensible closure members hingedly mounted on lateral walls of said supporting frame, said closure members including a pair of rigid lateral frame members, a pair of extensible frame members joining the ends of said lateral frame members to form an extensible framework, a pair of bracing linkages connecting said lateral frame members at intermediate points between said extensible frame members and adapted to support the weight of said framework from one edge thereof, an extensible covering for said framework, and a guide element positioned on said frame intermediate the lateral walls of said supporting frame to engage an extended lateral frame member to secure said extensible closure in an extended position.

15. In combination, a supporting frame, closures in said frame comprising a plurality of frame members hingedly positioned therein along lateral walls of said supporting frame, extensible supporting means between the upper and lower ends of said frame members, a lock bolt carried by an extended lateral frame member, an operating handle for said lock bolt positioned on the side of said frame member, said bolt operable by said handle to extend beyond the upper edge of said frame member, and a bolt receptacle in the extended frame member of another closure, engaged by said bolt for extending or collapsing a pair of closures simultaneously.

16. In a closure installation, a supporting frame, a plurality of extensible closure members hingedly mounted on lateral walls of said supporting frame, said closures including a pair of rigid lateral frame members, a pair of extensible frame members joining the ends of said lateral frame members to form an extensible framework, a pair of bracing linkages connecting said lateral frame members at intermediate points between said extensible frame members and adapted to support the weight of said framework from one edge thereof, upright covering fastening means secured to said extensible frame members, an extensible covering for said framework secured thereto, and a guide element positioned on said supporting frame inter-

mediate the lateral walls of said supporting frame to engage a lateral frame member to hold said extended closures against pivotal movement.

17. In a closure installation, a rectangular supporting frame, a plurality of closures pivotally and extensibly secured to lateral walls thereof in pairs, each pair comprising one closure positioned above another, each window closure comprising a pair of upright U-shaped frame members, extensible supporting linkages secured therebetween, a foldable covering supported by said linkages, and a guiding and holding means comprising a plate having a track therein positioned intermediately between the lateral walls of said supporting frame, arranged to guide the upright frame members to their extended positions and support the closures against pivotal movement.

18. In a closure installation, a rectangular supporting frame, a plurality of closures pivotally and extensibly secured to lateral walls thereof in pairs, each pair comprising one closure positioned above another, each closure comprising a pair of upright U-shaped frame members, extensible supporting linkages secured therebetween, a foldable covering supported by said linkages, a guiding and holding means comprising a plate having a track therein positioned intermediately between the lateral walls of said window frame, arranged to guide the upright frame members to their extended positions and support the closures against pivotal movement, and a locking bolt carried by a lower upright frame member for engaging a locking space in an upper frame member for locking an upper and lower closure member together to be moved as a unit.

19. In a foldable closure member, the combination of an extensible frame consisting of side frame members of predetermined length and extensible frame members joining said side frame members, with an attachable outer covering for said foldable closure member comprising a piece of flexible covering material, a comparatively stiff backing strip attached to said covering material along its upper and lower edges, said backing strip adapted to be previously folded along definite flexure lines, a plurality of eyelets secured along the upper and lower edges of said covering material, and a fastening strip secured to said covering material along its upper and lower edges for covering said eyelets.

20. In a foldable closure member, the combination of an extensible frame consisting of side frame members of predetermined length and extensible frame members joining said side frame members, with a removable covering for said foldable closure member comprising a rectangular piece of flexible covering material, a comparatively stiff strip of backing material secured along the upper and lower edges of said covering on the back side thereof, an edge of said flexible covering material folded over the side edges of said backing strip, a plurality of eyelets secured to said covering and said backing, and a finish strip secured to said covering material along its outside upper and lower edges, the edge of said finish strip adapted to be fastened to the edge of said covering material to permit access to said eyelets and to present a neat outer appearance.

21. In a closure, the combination of a supporting frame with a plurality of separate closure units for said frame, each of said closure units comprising an extensible framework and a flexible covering for said framework adapted to be uniformly extended or folded by said framework, two of said units being secured on each of the opposite sides of said frame, whereby the vertical half of said frame may be closed or any of the quarters of said frame may be closed.

22. In a closure, the combination of a supporting frame with a plurality of separate closure units for said frame, each of said closure units comprising an extensible framework and a flexible covering for said framework adapted to be uniformly extended or folded by said framework, two of said units being secured on each of the opposite sides of said frame, whereby the vertical half of said frame may be closed or any of the quarters of said frame may be closed, said units being mounted for pivotal movement on the respective parts of the frame and guide members disposed on the bottom and top of the frame midway between the sides of the frame for engaging the sides of said extensible units to hold the units against pivotal movement when the units are extended into engagement with said guide members.

23. In a foldable curtain, the combination of a flexible covering with a uniformly extensible framework comprising a pair of side frame members and a pair of extensible supporting linkages connecting said side frame members and located in spaced relation to each other, an auxiliary covering supporting linkage located at each end of said framework, said covering supporting linkages each comprising a plurality of links pivoted together to form a parallelogram extensible linkage and guides comprising metallic members pivotally connected to the outermost pivot points of said parallelogram linkages and formed with guide flanges for engaging sliding members carried by the innermost pivots of said parallel linkages, said guides being utilized to support said flexible covering.

24. In a foldable closure, the combination of an extensible frame comprising a pair of frame members of predetermined length, said frame members being joined by a pair of

extensible frame members to form an extensible framework, a foldable closure covering for one side of said framework, adapted to be folded or extended by said framework, and a relatively stiff backing strip carried by said framework and engaging said foldable covering, said stiff backing having a predetermined shape when folded for determining the shape of the folds in said foldable covering, and said covering being secured to said framework at a plurality of spaced points adjacent the edges of said covering and tensioned between spaced points across said stiff backing whereby the backing determines the shape of the folds tensioned across said backing.

In witness whereof, I hereunto subscribe my name this 24th day of October, 1930.

RICHARD H. VANSANT.