April 8, 1952 C. SMITH 2,592,202

PHOTOELECTRIC SORTING DEVICE

Filed Sept. 12, 1947 5 Sheets-Sheet 1

Fig. 1

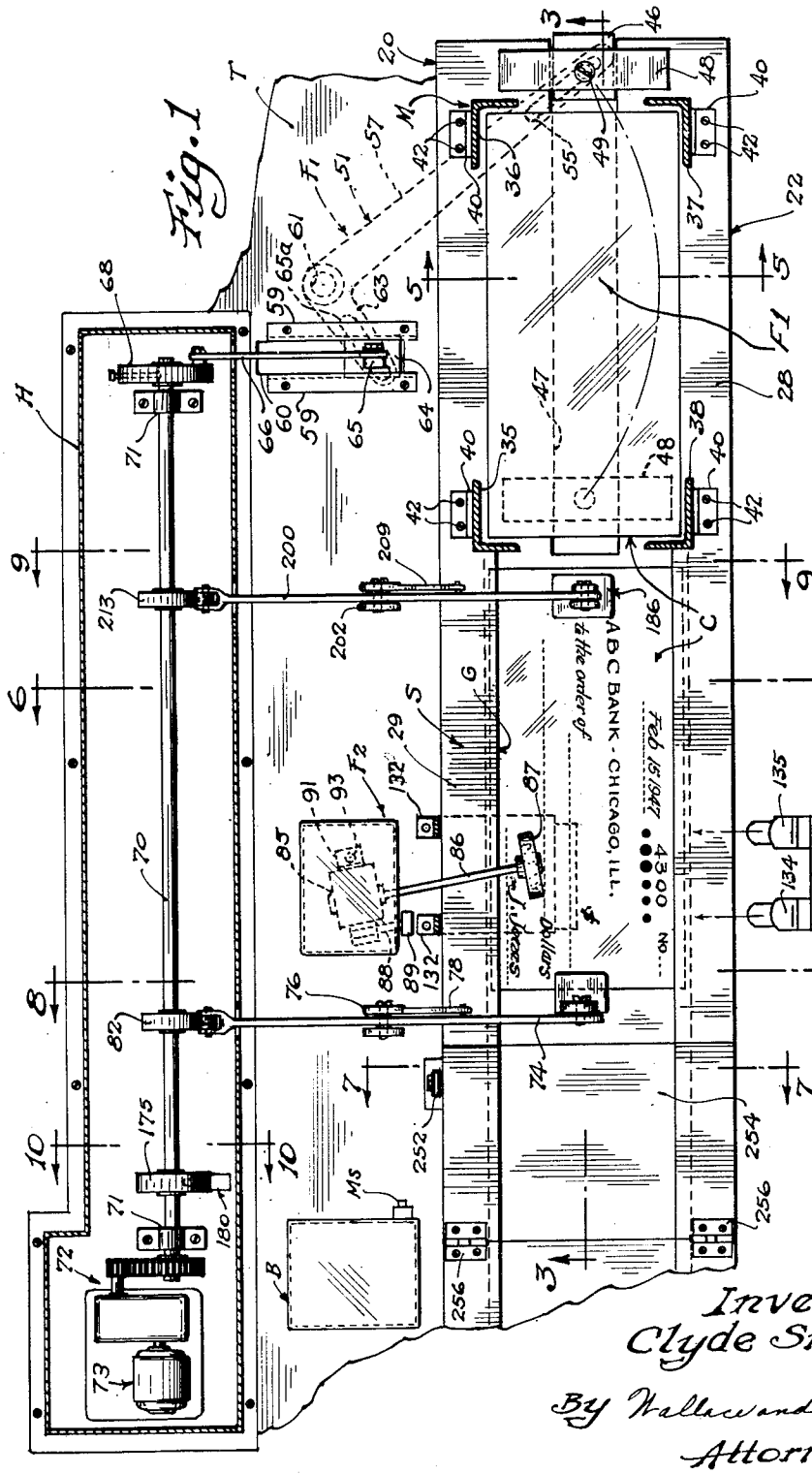

Inventor
Clyde Smith

By Wallace and Cannon
Attorneys

April 8, 1952 C. SMITH 2,592,202

PHOTOELECTRIC SORTING DEVICE

Filed Sept. 12, 1947 5 Sheets-Sheet 2

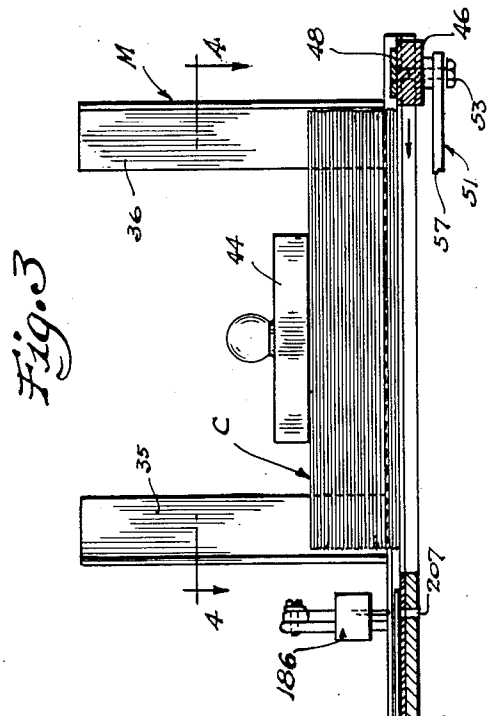

Fig. 3

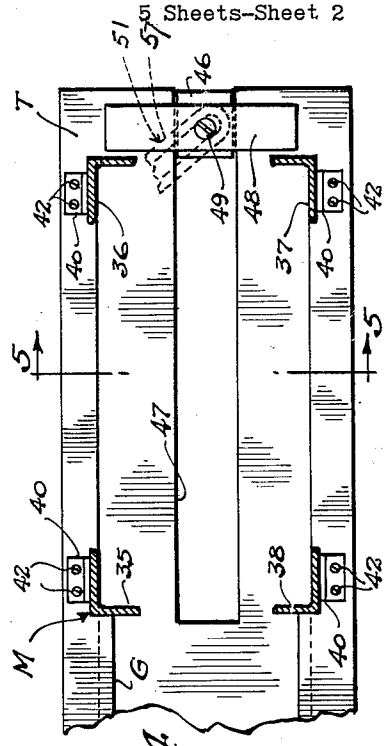

Fig. 4

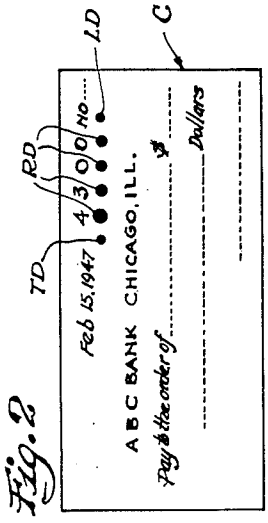

Fig. 2

Inventor
Clyde Smith
By Wallace and Cannon
Attorneys

April 8, 1952 C. SMITH 2,592,202

PHOTOELECTRIC SORTING DEVICE

Filed Sept. 12, 1947 5 Sheets-Sheet 3

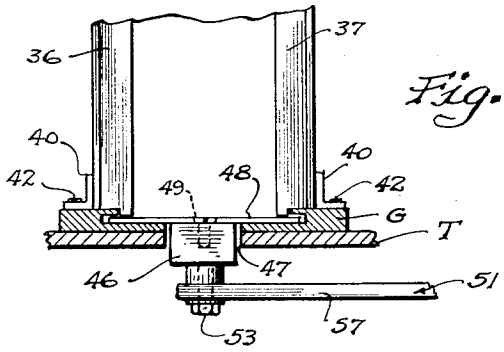

Fig. 5

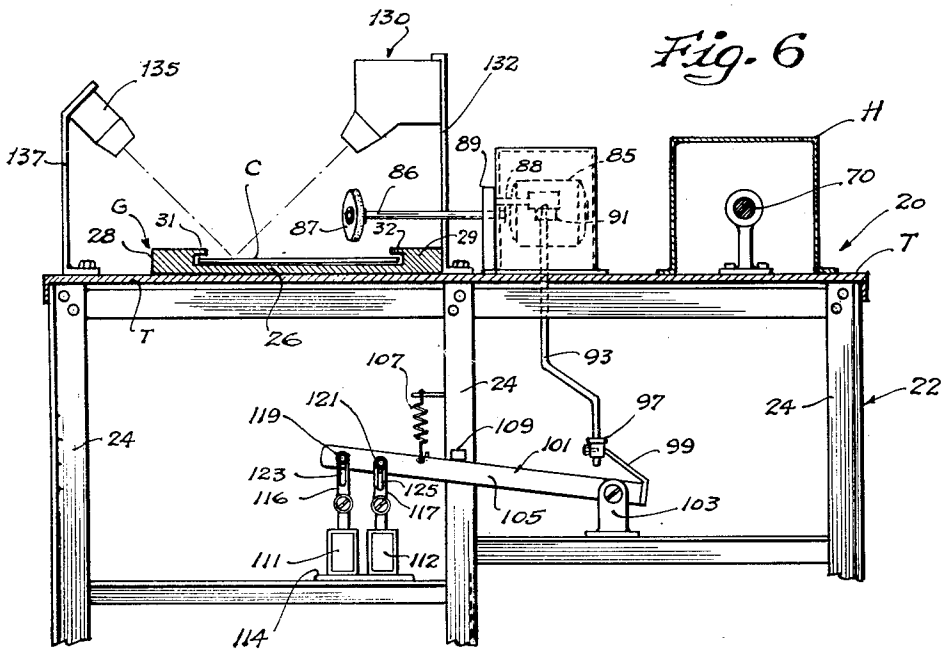

Fig. 6

Inventor
Clyde Smith
By Wallace and Cannon
Attorneys

April 8, 1952 C. SMITH 2,592,202

PHOTOELECTRIC SORTING DEVICE

Filed Sept. 12, 1947 5 Sheets-Sheet 4

Fig. 7

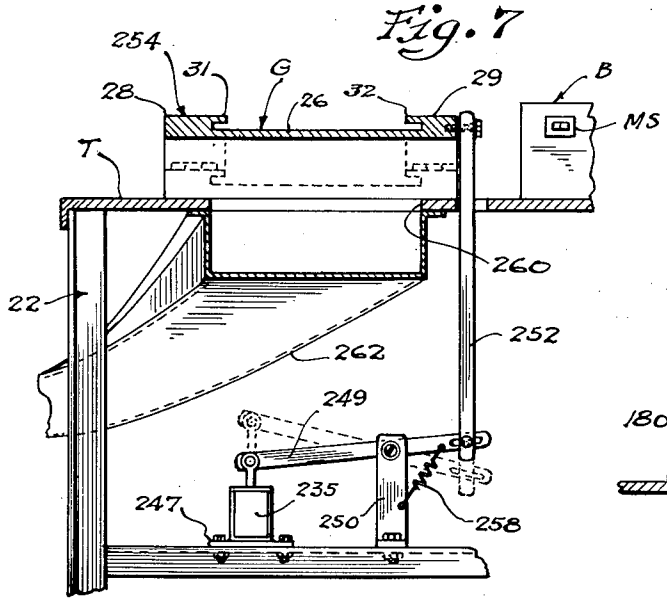

Fig. 10

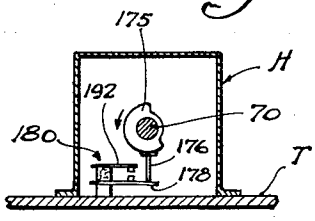

Fig. 8

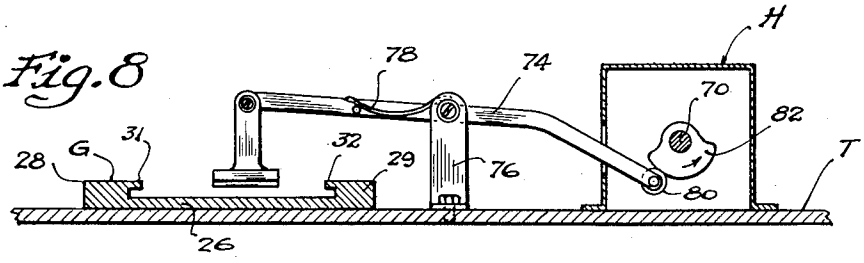

Fig. 9

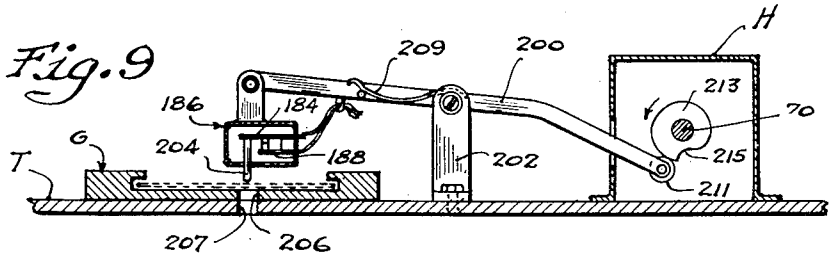

Inventor
Clyde Smith
By Wallace and Cannon
Attorneys

April 8, 1952 C. SMITH 2,592,202

PHOTOELECTRIC SORTING DEVICE

Filed Sept. 12, 1947 5 Sheets-Sheet 5

Fig. 11

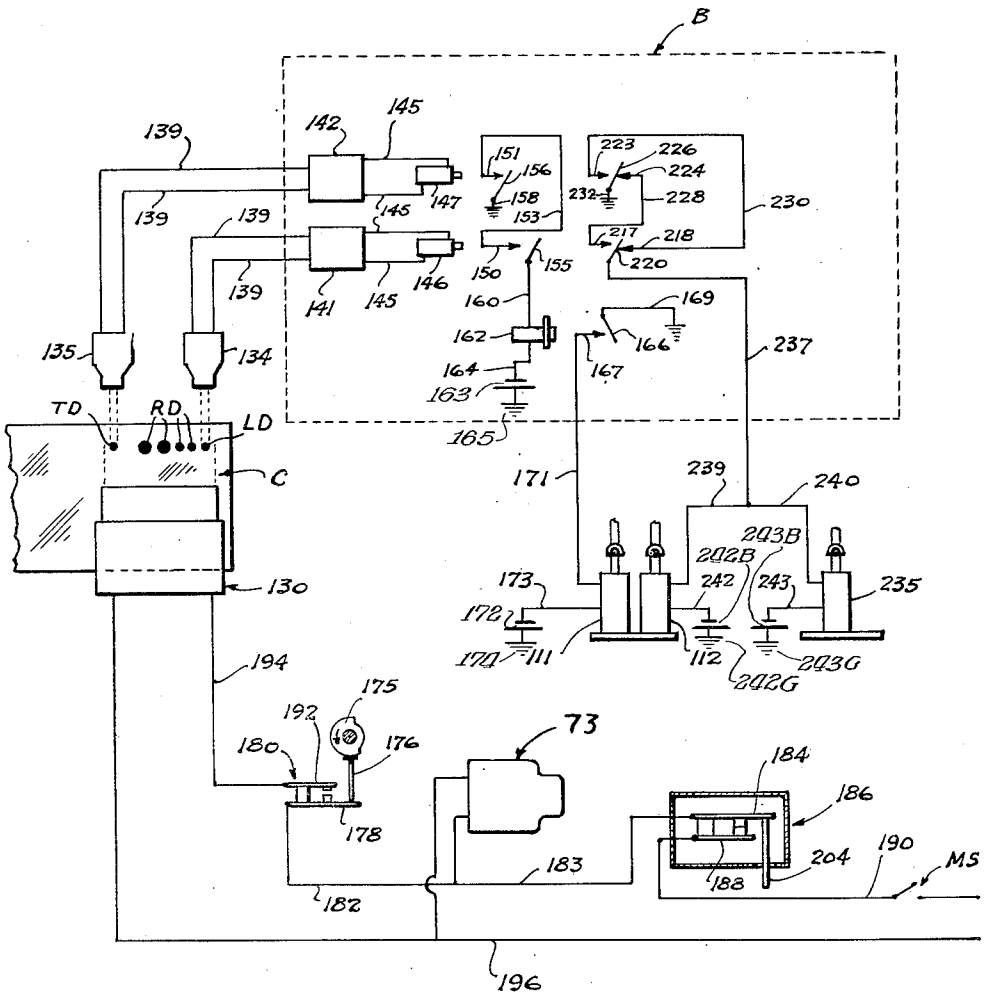

Inventor
Clyde Smith
By Wallace and Cannon
Attorneys

Patented Apr. 8, 1952 2,592,202

UNITED STATES PATENT OFFICE

2,592,202

PHOTOELECTRIC SORTING DEVICE

Clyde Smith, Hopkinsville, Ky., assignor to Addressograph-Multigraph Corporation, Cleveland, Ohio, a corporation of Delaware

Application September 12, 1947, Serial No. 773,607

3 Claims. (Cl. 209—111)

1

This invention relates to sorting machines and more particularly to sheet-sorting machines of the type wherein data representations carried by the sheets to be sorted are sensed while the sheets are stationary in the machine and the sheets are then sorted by the machine according to those representations.

In sorting machines of the type adapted to sort sheets such as, for example, checks, cards and the like, it is common practice to control the sorting operations of the machine according to data representations carried by the sheet to be sorted, and which data representations are sensed by the machine. These data representations, carried by the sheets, may be any one of several types such as, for example, holes punched in the sheet which have certain data representing characteristics and which may be sensed by such devices as feelers embodied in the machine, or light reflective areas having certain data representing characteristics and which may be sensed by such devices as photoelectric devices embodied in the machine. Whichever type of data representations are used, it will be apparent that it is essential that these representations be accurately positioned in the machine when a sensing operation is to be performed thereon, and it is a primary object of my invention to insure that such data representations, carried by a sheet to be sorted in a sorting machine, are accurately positioned in the machine when a data-sensing operation is performed thereon.

A further object of my invention is to enable the position of a sheet in a sorting machine to be sensed by photoelectric means prior to the performance of a data-sensing operation thereon.

An object ancillary to the foregoing is to enable the performance or non-performance of a sensing operation on the data representations carried by such a sheet to be controlled by photoelectric means according to whether the sheet was previously determined by the photoelectric means to be in proper or improper position.

In the operation of sorting machines of the aforesaid type, it is desirable that, if the data representations carried by a sheet to be sorted are in proper position in the machine, the machine be permitted to operate in a normal manner and proceed to sense and properly sort the check. However, if, on the other hand, the data representations carried by a sheet are not in proper position in the machine it is desirable that normal operation of the machine be interrupted so that improper sorting of the sheet will not be unintentionally effected. In this connection it is an

2

object of my invention to enable the position of a sheet in a sorting machine to be sensed by photoelectric means and the normal sorting operation of the machine to be controlled by the photoelectric means in accordance with whether the sheet is, or is not, properly positioned in the machine.

More specifically, it is an object of my invention to enable proper or improper positioning of two spaced locating areas on a sheet in a machine of the aforesaid type to be sensed by photoelectric means and: if the sheet so sensed is in proper position, to permit the normal operation of the machine to continue with subsequent sorting of the sheet; if both of the locating areas are improperly positioned, to automatically stop further sorting operation of the machine until the sheet is manually removed therefrom; and if only one of the locating areas is properly positioned, to automatically effect a special feeding operation whereby the sheet is fed into a special collecting hopper where it may be visually inspected.

Other and further objects of the present invention will be apparent from the following description and claims and are illustrated in the accompanying drawings which, by way of illustration, show the preferred embodiment and the principles thereof and what I now consider to be the best mode in which I have contemplated applying these principles. Other embodiments of the invention embodying the same or equivalent principles may be used and structural changes may be made as desired by those skilled in the art without departing from the present invention and the purview of the appended claims.

In the drawings:

Fig. 1 is a fragmentary top plan view of a sorting machine embodying the principles of my invention;

Fig. 2 is a front view of the face of a sheet on which the locating areas are represented in accordance with my invention;

Fig. 3 is a sectional view taken substantially along the line 3—3 in Fig. 1;

Fig. 4 is a sectional view taken substantially along the line 4—4 in Fig. 3;

Fig. 5 is a sectional view taken substantially along the line 5—5 in Fig. 4;

Fig. 6 is a sectional view taken substantially along the line 6—6 in Fig. 1;

Fig. 7 is a sectional view taken substantially along the line 7—7 in Fig. 1;

Fig. 8 is a sectional view taken substantially along the line 8—8 in Fig. 1;

Fig. 9 is a sectional view taken substantially along the line 9—9 in Fig. 1;

Fig. 10 is a sectional view taken substantially along the line 10—10 in Fig. 1; and

Fig. 11 is a wiring diagram showing certain aspects of my invention.

General description

In the form shown for disclosure in the drawings, my invention is embodied in sorting apparatus comprising a sorting machine **20** having a frame **22** which affords a table-top T supported by legs **24**. A magazine M is mounted on one end portion of the table-top T adjacent to one end portion of, and in effect forms an extension of, a sheet guideway G.

In the operation of my novel machine, as will be discussed in greater detail hereinafter, sheets C, such as, for example, checks or the like, which are to be sorted by the machine, are stacked, face up, in the magazine M and are fed sequentially by a sheet feeder F1 from the bottom of the magazine M along the guideway G into sensing position S, where data representations RD and positionally related position-indicating indicia or marks LD and TD are sensed by photoelectric means P, and are then either held in this position, fed through normal sorting channels by a second sheet feeder F2, or fed through a special sorting channel by the feed mechanism F2, depending on what position each sheet occupies as determined by the photoelectric means P. Such photoelectric means are of course sensitive to varying light intensities reflected from the sensed areas of the sheet C, and insofar as the position-indicating marks LD and TD are concerned, it will be evident that the marks need only be of a contrasting relation with adjacent portions of the sheet. In the present instance such marks are made of a higher reflective value so as to thereby simplify the electrical circuits as will hereinafter appear.

Specific description

As hereinbefore stated, the sorting machine **20** shown in the accompanying drawings comprises the supporting frame **22** which embodies a table-top T supported by the legs **24**. The sheet guideway G comprises the usual base plate **26** with two upstanding side rails **28** and **29** and two flanges **31** and **32** projecting inwardly from the respective side rails **28** and **29** in spaced relation to the base plate **26**, Figs. 1 and 6.

The magazine M comprises four substantially L-shaped posts **35**, **36**, **37** and **38** mounted on the side rails **28** and **29** of the sheet guideway G and secured thereto by any suitable means such as bolts **42** extending through brackets **40**. A plurality of sheets C, such as, for example, bank checks, may be stacked in the magazine M within the confines of the posts **35**—**38**, and a weighted follower **44** may be placed on the stack to thereby press the sheets G toward the bottom of the magazine. The sheet feeder F1 which as previously discussed, is adapted to sequentially feed the sheets C from the bottom of the magazine M into sensing position S in the guideway G, includes a slide **46**, Figs. 1, 3 and 5, reciprocally mounted in a slot **47** formed in one end of the table-top T and the guideway G. A plate **48**, having a thickness slightly less than the thickness of a sheet C, is mounted on the top surface of the slide **46** by any suitable means such as a screw **49**. The slide **46** is attached to a bell crank **51**, Figs. 1 and 5, by a pin and slot connection, a pin **53** carried by the slide **46** extending through a slot **55** formed in one arm **57** of the bell crank **51**. The bell crank **51** is pivotally mounted on a stud **61** carried by the table-top T, and the other arm **63** thereof is attached to a block **64** by a pin and slot connection, a pin **65**, carried by the block **64**, extending downwardly through a slot **65***a* formed in the arm **63** of the bell crank **51**. The block **64** is slidably mounted in suitable supporting tracks **59** within a slot **60** formed in the table-top T, and the upper end portion thereof is attached to one end portion of a link **66**. The other end portion of the link **66** is pivotally attached to a crank **68** fast on a cam shaft **70** rotatably mounted in brackets **71** in a housing H on the upper surface of the table-top T. A motor **73**, which is in constant operation during the normal operation of my novel machine **20**, is mounted in the housing H and is connected to the cam shaft **70** through suitable reduction gearing **72**.

During the normal operation of my machine **20**, the motor **73**, through the reduction gearing **72**, drives the cam shaft **70** through one complete revolution during each sheet-sorting operation of the machine. It will be apparent that upon each revolution of the cam shaft **70**, the crank **68**, through the bell crank **51** and associated mechanism, will cause the slide **46** and the plate **48** to move through one complete reciprocation from the position shown in solid lines in Fig. 1, to the position shown in broken lines therein and back again. In the forward stroke of the slide **46** and the plate **48**, that is, from the solid line position to the broken line position shown in Fig. 1, the plate **48** engages the rear edge of the lowermost sheet C in the magazine M and pushes it ahead of it into the guideway G, a stop finger **74** being effective to stop the sheet in sensing position S, as will be discussed in greater detail hereinafter. On the return stroke of the slide **46** and the plate **48**, the plate **48** slides under the succeeding lowermost sheet C in the magazine M without effecting lateral movement of the latter. When the slide **46** and the sheet **48** have returned to their original position, just outside the magazine M, the next succeeding sheet S is pressed down by the other sheets, and the weighted follower, stacked thereon, into position to be engaged by the plate **48** and to be fed thereby into the guideway G during the next reciprocation of the plate **48**.

The stop finger **74** is, in the present instance, movable between an ineffective upper position and an effective lower position, and when it is in its lower position it lies in the path of the leading edge of sheets moving through the guideway G, the finger being moved into sheet-stopping position during the first portion of each revolution of the cam shaft **70** and remaining there to thereby restrain the sheets against movement from the sensing position S until a predetermined time, later in the cycle of operation, when it is raised out of the path of the sheet to permit the sheet to be fed to the left, as viewed in Fig. 1 in the guideway G. The finger **74** is pivotally mounted on a bracket **76**, mounted on the upper surface of the table-top T, and is constantly urged by a torsion spring **78**, Fig. 8, toward lowered or sheet-stopping position. A roller **80** is carried by the finger **74** and is in engagement with a cam **82** fast to the cam shaft **70**. The cam **82** has such a configuration, and is so positioned on the shaft **70**, that during each rotation of the cam shaft **70**, it holds the stop

finger 74 in raised position, out of engagement with the leading edge of the sheets C, during the time when sheet is to be fed to the left from the sensing position S, and permits the finger 74 to be lowered into sheet-engaging position, and held therein, by the spring 78 when a sheet C is to be held in the sensing position.

The sheet feeder F_2, by which the sheets C may be fed to the left, as viewed in Fig. 1, from the sensing position S, comprises a motor 85 having a drive shaft 86 on which is secured a roller 87. One end of the motor 85 is pivotally supported by a rod 88 from a bracket 89 carried by the table-top T, Figs. 1 and 6. The other end of the motor 85 has a bracket 91 formed thereon which is secured to the upper end portion of a rod 93, which extends downwardly through an opening in the table top T, and the lower end portion of which is adjustably secured in a bushing 97 on the arm 99 of a rocker 101 pivotally mounted on a bracket 103 carried by the frame 22.

The rocker 101 includes an arm 105 to which one end of a spring 107 is connected, the other end of the spring being suitably anchored on the frame 22. The spring 107 normally urges the arm 105 upwardly against a stop 109 carried by the frame 22 and when the arm 105 is held in this position, the rod 93 rocks the motor 85 to a lowered position, as shown in Fig. 6, so that the feed roller 87 raised out of sheet engaging position.

Two solenoids 111 and 112 are mounted on a block 114 carried by the frame 22, and the armatures thereof are pivotally connected to end portions of links 116 and 117, respectively. The other end portions of the links 116 and 117 are connected by pin and slot connections to one end portion of the arm 105 of the rocker 101, two pins 119 and 121, carried by the arm 105, being engaged in two slots 123 and 125, respectively, formed in the links 116 and 117. Either of the solenoids 111 or 112 is effective upon energization thereof to rotate the rocker 101 in a counterclockwise direction, as viewed in Fig. 6, to thereby move the rod 93 upwardly and thereby rock the motor 85 about its pivot rod 88 and move the sheet feed roller 87 down into sheet engaging position. The motor 85 is constantly operating during operation of the machine 20 and, therefore, the sheet feed roller 87, when it is moved into sheet engaging position, is effective to feed a sheet positioned in sensing position S to the left, as viewed in Fig. 1, if the stop finger 74 is in raised position. The solenoids 111 and 112 are controlled in such a manner by mechanism embodied in my machine that they are energized and de-energized in timed relation to the other operations of the machine, as will be discussed in greater detail presently.

In the present embodiment of my invention the machine 20, shown in the drawings, is of the type adapted to sort bank checks C according to the bank on which they were drawn. On checks of the character adapted to be sorted by this machine, an individual coded marking is assigned to each bank and this marking is carried by each check blank issued by the respective bank. Thus, for example, in Figs. 1 and 2 a check blank C of the "ABC bank" is shown and the coded marking for this bank is shown as including the number "4300" printed in the upper right hand corner of the face of the check. In the present embodiment of my invention this number, "4300," is also represented by four datum representing dots RD positioned directly below the respective numerals of the number "4300" and formed as by printing in ink which may be black or of any other color affording effective according to a contrast with the color of the paper of which the check is made. The dots RD are formed in accordance with any predetermined code, so that when the check C is in sensing position S in the machine 20, the code marking, namely, the marking "4300" may be sensed by photo-electric means (not shown) in a manner well known to the art, and the check thereupon be sorted into collecting means for checks of this bank by suitable sorting means. In the present instance the code utilized in imparting the desired numerical significance to the dots RD is based on the size of such dots, but it will be recognized that insofar as the present invention is concerned, the code might be positional and of a single or multiple element type, or it might well be attained in whole or in part by the use of different colors in the dots RD. The sorting means, per se, does not form any part of my invention and, therefore, is not shown in the drawings and will not be discussed herein except insofar as it is pertinent to an understanding of my invention.

It will be seen that when, as here, sensing of the coded marking is dependent on the reading of the amount of light reflected by the marking, it is of primary importance that the coded marking be accurately disposed in proper position in the machine when such a data-sensing operation is performed, and a primary aspect of my invention is the determination, by a preliminary sensing, that such proper positioning of a sheet has been effected and, if not, to interrupt the normal sorting operation of the machine.

For effecting this preliminary sensing, I provide a projector unit 130, Fig. 6, carried by a bracket 132 mounted on the table-top T, and adapted to project individual beams of light at an oblique angle onto two locating dots printed on the sheets C in alignment, or in some other predetermined relationship, with respect to the data representing dots RD. As herein shown, one of these dots, namely, the dot LD is in leading position relative to the dots RD during the movement of the sheets C through the machine 20, and the other dot, namely, the dot TD is in trailing position relative to the dots RD. Two photoelectric cells 134 and 135 are carried by a bracket 137 mounted on the table-top T, and are adapted to receive rays of light reflected by the locating dots LD and TD, respectively, from the projector 130, when a sheet C of the aforementioned type is properly positioned in sensing position S.

The photoelectric cells 134 and 135 are connected in the usual manner by conductors 139 to two amplifiers 141 and 142, respectively, and the amplifiers 141 and 142 are in turn connected by conductors 144 to two multi-contact relays 146 and 147, respectively. Two stationary contacts 150 and 151 of the relays 146 and 147, respectively, are connected together by a conductor 153 and are adapted to engage two normally-open movable contacts 155 and 156, respectively, when the relays 146 and 147 are energized. The movable contact 156 is connected to ground by a conductor 158, and the other movable contact 155 is connected by a conductor 160 to one terminal of a slow-to-energize relay 162, the other terminal of which is connected to one terminal of a battery 163 by a conductor 164, the other

terminal of the battery 163 being grounded at 165. The amplifiers 141, and 142, the relays 146 and 147 and the relay 162 may be mounted in a housing B positioned on the upper surface of the table-top T.

The relay 162 has a movable contact 166 and a fixed contact 167, the movable contact 166 being normally out of engagement with a fixed contact 167, and being connected to ground by a suitable conductor 169. The fixed contact 167 is connected by a conductor 171 to the windings of the solenoid 111 which are connected to one terminal of a battery 172 by a conductor 173, the other terminal of the battery 172 being grounded at 174.

Therefore, it will be seen that when a sheet C, having the two locating dots LD and TD properly disposed thereon, is properly located in sensing position S in the sorting machine 20, and the projector 130 is energized, the intensity of the light reflected by the locating dots is effective through the photoelectric cells 134 and 135 and the amplifiers 141 and 142 to energize the relays 146 and 147 and thereby close the movable contacts 155 and 156 against the fixed contacts 150 and 151, respectively, and thereby complete a circuit through the slow-to-energize relay 162. The slow-to-energize relay being energized, after a slight delay, during which the coded markings are sensed by photoelectric means (not shown), causes the movable contact 166 to close on the fixed contact 167 to thereby complete a circuit from battery through the solenoid 111 to ground and thereby energize the solenoid 111. Energization of the solenoid 111 causes it to pull the rocker 101 down to thereby pivot the motor 85 upwardly so that the roller 87 moves into sheet feeding engagement with the sheet C positioned in the sensing position S. The movement of the roller 87 into feeding engagement with the sheet C takes place at a time when the stop finger 74 is out of sheet engaging position, as will be discussed in greater detail presently, so that the roller 87 upon contact with the sheet C is effective to feed the sheet to the left, as viewed in Fig. 1, from sensing position S into the sorting means (not shown). As previously discussed, the motor 85, and, therefore, the roller 87, are in constant operation during the operation of my machine 20, so that when the roller 87 contacts the sheet C the resultant feeding of the sheet is quickly effected.

A cam 175, made of suitable insulating material such as, for example, impregnated fabric, is fast on the cam shaft 70 and is in engagement with a pin 176, Figs. 1, 10 and 11, carried by the contact member 178 of a normally closed switch 180 mounted in the housing H. As is best seen in Fig. 11, the switch 180 is connected in series with the projector 130, one contact member 192 of the switch 180 being connected by a wire 194 to one side of the projector 130, and the other contact member 178 of the switch 180 being connected by wires 182 and 183 to one contact 184 of a normally closed feeler switch 186, which will be discussed in greater detail presently, the other contact 188 of which is connected by a wire 189 to one side of a master switch MS, the other side of which is connected to a power line 190. The other side of the projector 130 is connected to a power line 196 to complete the circuit therethrough.

The cam 175 is of such configuration, and is so positioned on the cam shaft 70, that it holds the contact 178, through the pin 176, out of engagement with the contact 192 throughout all portions of each revolution of the cam shaft 70 except that portion wherein a sheet C is or should be, disposed in sensing position S in the machine 20 and the code markings CM and the locating dots LD and TD are to be sensed, as will be discussed hereinafter.

It will be remembered that when a sheet C, having the two locating dots LD and TD, is properly located in sensing position S in the machine 20 and a sensing operation is performed thereon, upon illumination of the projector 130, the two locating dots LD and TD are sensed by the photoelectric means and the roller 87 is subsequently lowered into sheet feeding position to thereupon cause the sheet C to be fed from sensing position, after which another sheet C is fed into sensing position S, during the next cycle of operation, and the sensing operation is repeated on the new sheet. This sensing and subsequent feeding operation is repeated sequentially for all the sheets in the magazine M, so long as each of the sheets sensed has the two locating dots LD and TD, and the sheets are properly located in sensing position S in the machine 20 where the preliminary sensing operation is performed thereon. However, it will be apparent that if, during one of these cycles of operation, the sheet sensed does not have the two locating dots LD and TD, or, if the sheet does have the dots but they are obscured, or the sheet is improperly positioned in the machine, light will not be reflected into the photoelectric cells 134 and 135 to activate these cells when the projector 130 is energized and, therefore, neither of the relays 146 or 147 will be energized so the circuit to the solenoid 111 will remain open. This results in the solenoid 111 remaining unenergized so that the roller 87 is not pulled down into sheet-feeding engagement, and, therefore, the sheet C will not be fed to the left, as viewed in Fig. 1, into the sorting mechanism but will remain stationary in the sensing position S. It will be seen that if the machine 20 was permitted to continue normal operation when this condition existed, the feeding means F_1, upon the next rotation of the crank 68, during the next cycle of operation, would eject another sheet C from the magazine M toward sensing position S which would cause this second sheet to be fed onto the sheet still remaining in sensing position and would cause an undesirable condition. To prevent this from occurring I provide the feeler switch 186 carried by a feeler finger 200 pivotally mounted on a bracket 202 mounted on the table-top T. A downwardly extending pin 204 is carried by the contact member 184 of the feeler switch 186, and the feeler finger 200 supports the switch 186 in such a manner that the pin 204 is in axial alignment with two openings 206 and 207 formed in the guideway G and the table-top T, respectively, Fig. 9, which openings are covered by the trailing edge portion of a sheet C when the sheet is disposed in sensing position S in the machine 20. A torsion spring 209 urges the feeler finger 200 in a direction to move the pin 204 toward the openings 206 and 207, and a roller 211 rotatably mounted on the finger 200 is in engagement with a cam 213 which is fast on the cam shaft 70. The configuration of the cam 213 is such, and the cam is so positioned on the shaft 70, that during most of each cycle of operation the cam 213 through its engagement with the roller 211 on the finger 209, holds the pin 204 in raised position above the guideway G, and it is only during the last

portion of each cycle of operation, at which time the sheet feeding operation from sensing position S has normally taken place, that the roller 211 rides up into the depression 215 in the periphery of the cam 213 and permits the switch 186 and the pin 204 to be moved downwardly by the spring 209 in a feeling operation. If, when the pin 204 is moved down in a feeling operation, the sheet or check D, sensed earlier in the cycle, has been fed out of sensing position S by the roller 87, as is normally true, the pin 204 enters the holes 206 and 207 without opening the switch 186, the roller 211 rides back out of the depression 215, the pin 204 and the feeler finger 200 is rocked back to their normal position, and the cycle of operation is completed. However, if, as previously discussed, a sheet C still occupies the sensing position S when the feeling operation of the pin 204 is instituted, the trailing end portion of the sheet is positioned over the openings 206 and 207 so that when the pin 204 is lowered it cannot enter the openings 206 and 207 but, instead, engages the sheet C so positioned and thereby forces the contact member 184 upwardly away from the contact member 186 to thereby open the circuit from the power line 190 through the switch 186, wire 183, motor 73 and power line 196, Fig. 11, to thereby stop the motor 73 and prevent further rotation of the cam shaft 70 so that the sheet feeding means F_1, is automatically prevented from ejecting more sheets C from the magazine M. To restore the machine 20 to operation, the operator may manually remove the offending sheet from sensing position in the machine 20 which will permit the pin 204 to drop down into the openings 206 and 207 so that the switch 186 will again close and operation of the motor M, and, therefore, of the machine 20 will be resumed.

From the foregoing, it will be apparent that when the machine 20 is operating normally, with each of the sheets C, which are fed from the magazine M, having the proper locating dots LD and TD and being properly positioned in sensing position S during the sensing portion, of each cycle of operation, the sheets will be sequentially fed from the magazine M through the sensing position S and on into the sorting mechanism. Also it will be seen that if one of the sheets C which reaches the sensing position S does not have the proper locating dots LD and TD, or if it is not properly located in the sensing position S so that neither of the locating dots are in proper registration with the photoelectric cells 134 and 135, the sheet will remain in sensing position so that when the feeler switch 186 is moved through a feeling operation, at the close of that particular cycle of operation the pin 204 will engage the offending sheet C and the switch 186 will thereby be opened and further operation of the machine will be prevented.

Thus it will be seen that my machine will continue to operate normally if both locating dots LD and TD are sensed by the photoelectric cells 134 and 135 during each cycle of operation, and will be automatically stopped if neither of the locating dots LD or TD are sensed by the photoelectric cells 134 and 135 during any particular cycle of operation. However, in addition to these two conditions, it is also desirable that if, when a sheet C is sensed during a cycle of operation, the photoelectric cells 134 and 135 sense only one of the locating dots LD or TD and not the other, the particular sheet so sensed be made readily available for visual inspection without interrupting the further operation of the machine, and, therefore, I have provided novel means whereby such a sheet will be fed by the feed roller 87 at the usual time in the cycle of operation but, instead of being fed to the sorting mechanism will be fed into a special hopper from which it may be readily withdrawn by the operator and visually inspected.

For the purpose of effecting this special operation of my novel machine, I provide a second set of contacts for the relays 146 and 147, these contacts comprising two stationary contacts 217 and 218 associated with the relay 146 and having a movable contact 220 positioned therebetween, and two stationary contacts 223 and 224 associated with the relay 147 and having a movable contact 226 positioned therebetween. The movable contacts 220 and 226 are normally closed on the contacts 218 and 224, respectively, and are adapted to be moved from engagement with the contacts 218 and 224 into engagement with the contacts 217 and 223 upon energization of the relays 146 and 147, respectively.

In my novel machine, the stationary contact 217 is connected in series with the stationary contact 224 by a wire 228; the stationary contact 218 is connected in series with the stationary contact 223 by a wire 230; the movable contact 226 is connected to ground by a wire 232; and the movable contact 220 is connected in series with the windings of the solenoid 112 and a solenoid 112 and a solenoid 235 by wires 237, 239 and 240, which solenoids are connected in parallel with each other and are connected to battery by wires 242 and 243, respectively. The wire 242 is connected to one terminal of a battery 242B, the other terminal of which is grounded at 242G. Similarly, the wire 243 is connected to one terminal of a battery 243B, the other terminal of which is grounded at 243G. Hence it will be seen that when the two relays 146 and 147 are either both energized, or both unenergized, no circuit is completed from battery through either of the solenoids 112 or 235, but when either one, but not the other, of the relays 146 and 147 is energized a circuit is completed from battery through both of the solenoids 112 and 235. Thus, for example, if the relay 146 is energized, but the relay 147 is not, the contact 220 is moved into engagement with the stationary contact 217 so that circuit is completed from battery through the wires 242 and 243 to the solenoids 112 and 235, respectively, through the wires 239 and 240, respectively, to the wire 237, and from the wire 237 through the movable contact 220, the stationary contact 217, the wire 228, the stationary contact 224, the movable contact 226, the wire 232 and back through ground to battery. If, on the other hand, the relay 147 is energized but the other relay 146 is not, the movable contact 226 is pulled into engagement with the stationary contact 223 while the movable contact 220 remains in engagement with the stationary contact 218 and this completes a circuit from battery through the wires 242 and 243 to the solenoids 112 and 235, respectively, from the solenoids 112 and 235 through the wires 239 and 240, respectively, to the wire 237, and from the wire 237 through the movable contact 220, the stationary contact 218, the wire 230, the stationary contact 223, the movable contact 226, the wire 232 and through ground back to battery. Energization of the solenoids 112 and 235 in this manner, by the energization of either of the relays 146 or 147, is effective to bring about a special feed-

ing of the particular sheet C causing such energization, as will be discussed presently.

The solenoid 235, Figs. 7 and 11, is mounted on a suitable block 247 carried by the frame 22, and the plunger of the solenoid 235 is pivotally connected to one end portion of a lever 249 which is pivotally mounted on a bracket 250, also carried by the frame 22. The other end portion of the lever 249 is connected by a link 252 to one end portion of a gate 254 which forms an integral part of the guideway G, Figs. 1, 3 and 7, and the other end portion of which is attached to the side rails 28 and 29 of the guideway G by hinges 256. It will be apparent that upon energization of the solenoid 235 the lever 249 will be rocked thereby in a counter-clockwise direction, as viewed in Fig. 7, to thereby raise the link 252 and swing the gate 254 upwardly on its hinges 256, as shown in Figs. 3 and 7. A spring 258 having one end attached to the lever 249 and the other arm attached to the bracket 250 is effective to swing the lever back to normal position and thus lower the gate 256 upon deenergization of the solenoid 235. The table-top T is cut away beneath the gate 254 to form an opening 260, Fig. 3, and the upper end portion of an inclined chute 262 is attached to the lower surface of the table-top T in communication with the opening 262, the other end portion of the chute extending through the machine 20 and communicating with a conveniently located special hopper, not shown.

That portion of the guideway G which forms the gate 254 lies just ahead, or, in other words, to the left as viewed in Fig. 1, of the feed roller 87. Therefore, it will be seen that if the feed roller 87 is lowered into feeding engagement with a sheet C, in sensing position S, when the gate 254 is in raised position, the sheet will be fed by the roller down through the opening 260 and, the chute 262 into the special hopper, and this constitutes the special feeding operation effected in my novel machine when one, but not the other, locating dot LD or TD is sensed during a machine operation. The solenoid 112 is provided for the purpose of effecting this feeding operation, this solenoid being energized by the sensing of one locating dot and not the other, as previously described, and when so energized acting in the same manner as previously set forth in detail with respect to solenoid 111, rotating the rocker arm 101 and thereby lowering the roller 87 into feeding engagement with the sheet C located in sensing position and thereby effecting the special feeding of this sheet, whereby the sheet or check is deposited in the special hopper from which it may be withdrawn by the operator and visually inspected.

Operation

In the operation of my invention as embodied in the novel machine shown in the accompanying drawings, a supply of sheets or checks C may be stacked, face up, in the magazine M and the weighted follower 44 placed thereon to press them downwardly therein. The master switch MS, Figs. 1 and 11, may then be closed manually to initiate operation of the machine.

Closing of the master switch MS causes the motor M to be energized to thereby drive the cam shaft 70 and rotate the crank 68 and the cams 82, 175 and 213.

Upon initiation of the rotation of the cam shaft 70 the crank 68 starts to drive the sheet feeder F_1 through a sheet ejecting operation, and early in the cycle of operation the cam 82 is rotated sufficiently to permit the stop finger 74 to be lowered by the spring 78 into sheet engaging position so that the sheet ejected from the magazine M by the sheet feeder F_1 will be stopped by the finger 74 in the sensing position S upon completion of the ejecting movement of the sheet feeder F_1 at the completion of the first half of the rotation of the cam shaft 70 and, therefore, of the crank 68.

During the first half of the cycle of rotation of the cam shaft 70 the larger portion of the cam 175, Figs. 1 and 10, is engaged with the pin 176 on the switch 180 and, therefore, holds the switch open. However, shortly after the first half of the cycle of rotation of the cam shaft 70, the lowermost sheet C having been fed from the magazine M into sensing position S where it is stopped by the finger 74, and the sheet feeder F_1 having started its return stroke, the smaller portion of the cam 175 moves into engagement with the pin 176, thereby permitting the switch 180 to be closed and the projector 130 to be energized. Energization of the projector 130 causes a beam of light to be cast from the projector 130 onto the position in the machine where the locating dots LD and TD and the code markings RD should be located. If the locating dots and code markings are properly present on the sheet C, and the sheet is properly located in the sensing position S, the intensity of the light reflected from the locating dots LD and TD is effective to energize the photoelectric cells 134 and 135 which in turn, through the amplifiers 141 and 142, energize the relays 146 and 147 to close the movable contacts 155 and 156 on the stationary contacts 150 and 151, respectively, to thereby close the circuit from battery, through the wire 164, the windings of the slow-to-energize relay 162, the wire 160, the movable contact 155, the stationary contact 150, the wire 153, the stationary contact 151, the movable contact 156, the wire 158 and back through ground to battery, to thereby energize the slow-to-energize relay. During the delay between the closing of the circuit to the slow-to-energize relay 162 and the energization thereof, the code markings RD are sensed by photoelectric means, not shown, to thereby operate the sorting means in a manner well known to the art, so that when the sheet is fed from sensing position S by the roller 87 the sorting means will be effective to channel it into the proper place corresponding to the particular code markings RD. The specific photoelectric means used for sensing the code markings RD, and the specific sorting means used with my machine do not form a part of my invention, my invention being primarily concerned with determining whether a proper check is suitably disposed in sensing position during a sensing operation and if such a check is so disposed to permit the check to then be fed to the sorting means and if not then to prevent the check from being so fed. Therefore, the specific sorting means used with my machine, and the specific photoelectric means used for sensing the data-representing code markings RD are not shown, it being sufficient for a clear understanding of my invention to state that any one of several types of sorting means which are well known to the art may be used, as may any one of several types of data-sensing photoelectric means which are also well known to the art.

If, as has been hereinbefore discussed, the sheet C which is sensed has the proper locating dots and they have been properly positioned in

sensing position so that the slow-to-energize relay 162 is energized, the energization of the relay 162 causes the movable contact 166 thereof to close on the stationary contact 167 to thereby complete a circuit from battery, through the wire 173, the solenoid 111, the wire 171, the stationary contact 167, the movable contact 166, the wire 169, and through ground back to battery to thereby energize the solenoid 111. Energization of the solenoid 111 causes the rocker 101 to be rotated to thereby lower the roller 87 on the constantly driven motor 85 into engagement with the sheet C and, the stop finger 74 having again been raised by the cam 82, to thereby feed the sheet to the left, as viewed in Fig. 1, in the guideway from the sensing position S into the above mentioned sorting means. Shortly after the sheet C has been fed from the sensing position S, the feeler finger 200 is oscillated by the cam 213 and the spring 209 through a feeling operation, during which, the sheet C not remaining in sensing position S, the pin 204 idly moves into and out of the openings 206 and 207 without opening the switch 186, so the one cycle of operation of the machine is completed without interruption and the next cycle of operation is thereupon initiated wherein the next sheet C is fed from the magazine M into the machine where it is acted upon in a similar manner, and this is sequentially repeated for each of the sheets C in the magazine so long as each sheet has the proper locating dots LD and TD and is properly located in sensing position S when a sensing operation is performed.

However, if a check, not having the locating dots LD and TD is fed into sensing position, or, if a check having the proper locating dots is not properly disposed in sensing position, so that neither of the photoelectric cells 134 and 135 are energized by reflected light from the projector 130, when the projector is energized, the relays 146 and 147 will not be energized and the circuit through the slow-to-energize relay 162 is not completed so that the solenoid 111 will not be energized, and, therefore, the feed roller 87 will not be lowered into sheet engaging position and the sheet C disposed at that time in the sensing position S, will remain in such position at the close of the cycle of operation. When this happens, the pin 204 carried by the feeler switch 186, will engage the offending sheet when, during the closing portion of the cycle of operation, the feeler finger 200 is moved through a feeling operation. Engagement of the pin 204 with the sheet C causes the switch 186 to be opened and thereby opens the circuit from the power lines 190 and 196 through the motor M, and causes the machine to automatically stop. When this occurs the operator can manually remove the offending sheet from the machine which will automatically permit the switch 186 to close and the motor M to resume operation.

In addition to the two above discussed operations, my machine is adapted to perform a third operation when either one, but not the other, of the locating dots LD and TD on a sheet C is sensed by the photoelectric cells 134 and 135. This third operation comprises feeding the particular check through special channels into a special hopper, from which hopper the check may be readily withdrawn and visually inspected.

In connection with this third operation it will be noted that the sensing of one locating dot or the other is effective to energize only one or the of the relays 146 and 147 which is ineffective to close the circuit through the slow-to-energize relay 162 and, therefore, the solenoid 111 remains unenergized. However, energization of one or the other of the relays 146 and 147 is effective to close the respective movable contacts 220 or 226 on the associated stationary contacts 217 or 223, respectively, and thereby ground the wire 237 either through the movable contact 220, the stationary contact 217, the wire 228, the stationary contact 224, the movable contact 226 and the wire 232, or through the movable contact 220, the stationary contact 218, the wire 230, the stationary contact 223, the movable contact 226, and the wire 232. Grounding of the wire 237 through either of these paths is, as best seen in Fig. 11, effective to complete the circuits from battery through the wires 242 and 243, respectively, the solenoid 112 and 235, respectively, and the wires 239 and 240, respectively, to the wire 237 and thus back through ground to battery, to thereby energize the solenoids 112 and 235.

The energization of the solenoid 235 is effective, through the arm 249 and the link 252, to raise the gate 254 into the position shown in Fig. 3, and the energization of the solenoid 112 is effective, through the rocker 101 and the rod 93, to pull the roller 87 down into engagement with the sheet C in the sensing position S, to thereby feed the sheet C under the gate 254 down the chute 262 into the special hopper. Whereupon, during the completion of the cycle of operation of the machine, the feeler finger 200 is actuated through a feeling operation, and the machine is then ready to automatically begin the next cycle of operation.

From the foregoing it will be seen that by my invention the authenticity and the proper positioning of checks in a sorting machine may be readily determined by photoelectric means in a novel and expeditious manner and the operation may be automatically controlled, as a result of this determination by the photoelectric means, so that the machine will continue to operate normally, be automatically shut off, or pass through a special cycle of operation in accordance with the conditions determined by the photoelectric means.

Thus, while I have illustrated and described preferred embodiments of my invention, it is to be understood that these are capable of variation and modification and I therefore do not wish to be limited to the precise details set forth, but desire to avail myself of such changes and alterations as fall within the purview of the following claims:

I claim:

1. In a machine having a sensing station at which sensing operations may be performed on sheets each bearing a data field including index positions at which positionally coded data representations may be afforded and each bearing a pair of spaced position-determining marks of a color contrasting with the color of adjacent portions of the sheet and disposed in predetermined relation to said data field, sheet feeding means for feeding a sheet out of said sensing station, a normally ineffective sheet rejecting guide member, sensing means comprising an illuminating means adapted to direct light onto said marks at a predetermined angle with respect to the face of a sheet, a pair of photosensitive devices focused individually to receive light reflected from the respective areas to be occupied by the position-indicating marks on a sheet when such sheet is in a predetermined position at said sta-

tion, means operable to energize said illuminating means in each machine cycle after feeding of a sheet into said station, means operable under control of said sensing means to disable said feeding means when neither of the marks of a sheet at said sensing station is detected, and means operable under control of said sensing means when but one such mark is sensed to render said feeding means and said sheet rejecting means effective.

2. In a machine having a sensing station at which sheets each bearing a data field including index positions at which positionally coded data representations may be afforded and each bearing a plurality of spaced position-determining indicia in predetermined relation to said data field, may be disposed, sheet feeding means having electrically operated control governing the feeding of such a sheet through such a machine, a plurality of relays, each of said relays having a pair of normally open contacts and being adapted upon energization to close said contacts, said pairs of contacts being connected in series with each other, means affording an energizing circuit for said electrically operated means and including said plurality of pairs of contacts in series so as to energize said electrically operated means when said plurality of pairs of contacts are simultaneously closed, a plurality of photoelectric cells operatively associated with the respective relays to govern energization of said relays, means effective to operate said plurality of cells when such a sheet is disposed in said machine with said position-determining indicia in predetermined positions to thereby close said plurality of pairs of contacts and effect a feeding operation of said electrically operated means, and other means including circuits closed upon operation of but one of said relays to render said sheet feeding means effective, and sheet directing means rendered effective by said other means to direct the sheet discharged from said sensing station along a predetermined path.

3. In a machine having a sensing station at which sensing operations may be performed on sheets each bearing a data field including index positions at which positionally coded data representations may be afforded and each bearing a pair of spaced position-determining marks, means for feeding a sheet out of said sensing station, a sheet rejecting guide member, sensing means comprising an illuminating means adapted to direct light onto said marks, a pair of photo-sensitive devices focused individually to receive light reflected from the respective areas to be occupied by the position-indicating marks on a sheet when such sheet is in a predetermined position at said station, means operable under control of said sensing means to disable said feeding means when neither of the marks of a sheet at said sensing station is detected, and means operable under control of said sensing means when but one such mark is sensed to render said feeding means and said sheet rejecting means effective.

CLYDE SMITH.

REFERENCES CITED

The following references are of record in the file of this patent:

UNITED STATES PATENTS

Number	Name	Date
2,358,051	Broido	Sept. 12, 1944

FOREIGN PATENTS

Number	Country	Date
256,223	Great Britain	Sept. 1, 1927