G. W. FISHER & F. HOYLAND, Jr.

SWITCH MECHANISM.

APPLICATION FILED SEPT. 22, 1908.

930,370.

Patented Aug. 10, 1909.

2 SHEETS—SHEET 1.

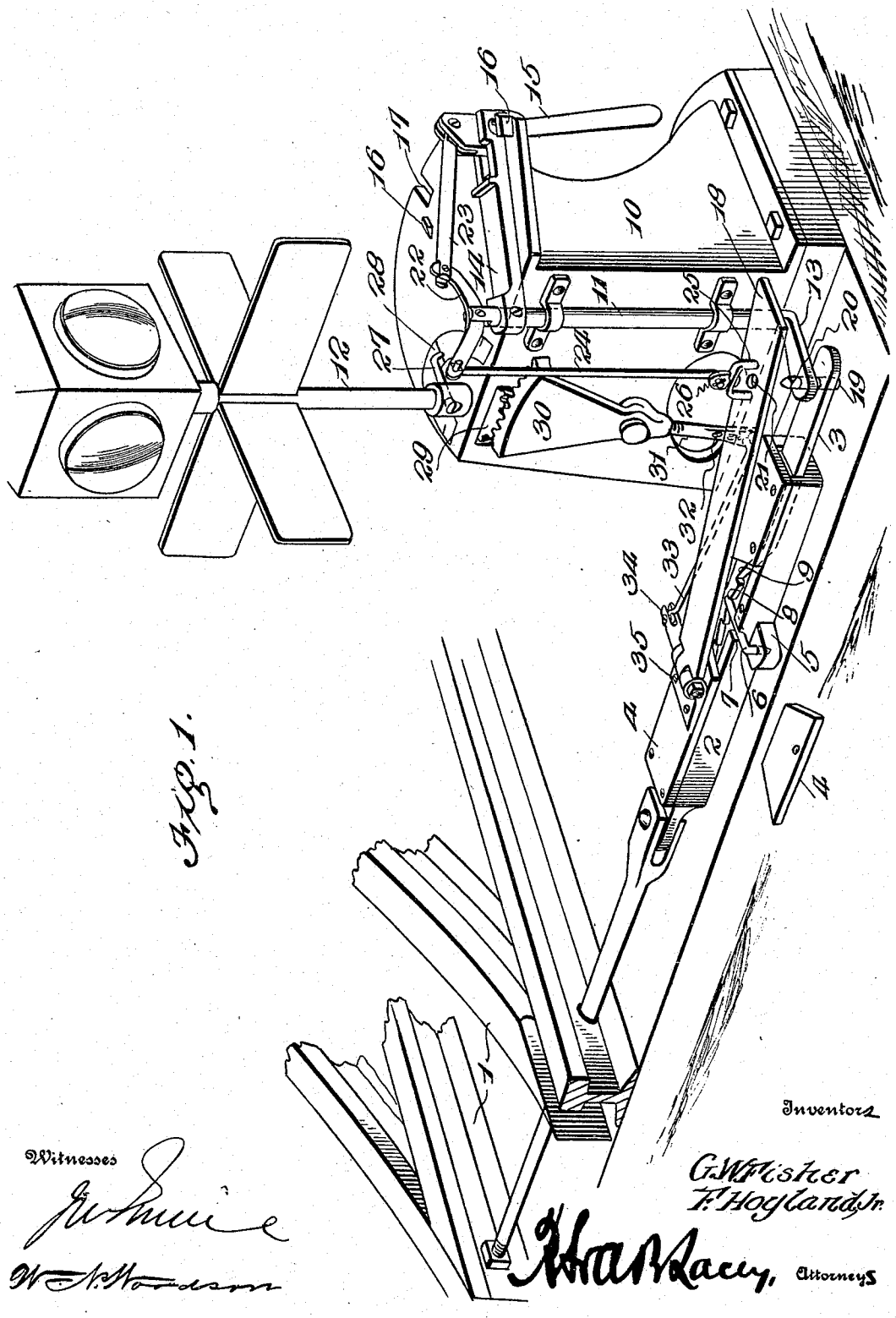

Fig. 1.

Witnesses

Inventors

G. W. Fisher
F. Hoyland, Jr.

Attorneys

ANDREW. B. GRAHAM CO., PHOTO-LITHOGRAPHERS, WASHINGTON, D. C.

G. W. FISHER & F. HOYLAND, Jr.

SWITCH MECHANISM.

APPLICATION FILED SEPT. 22, 1908.

930,370. Patented Aug. 10, 1909.

2 SHEETS—SHEET 2.

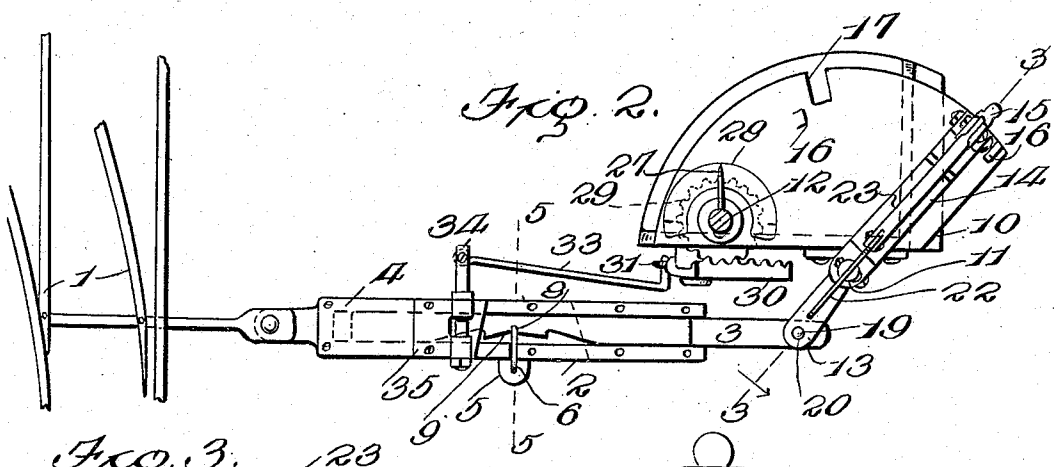

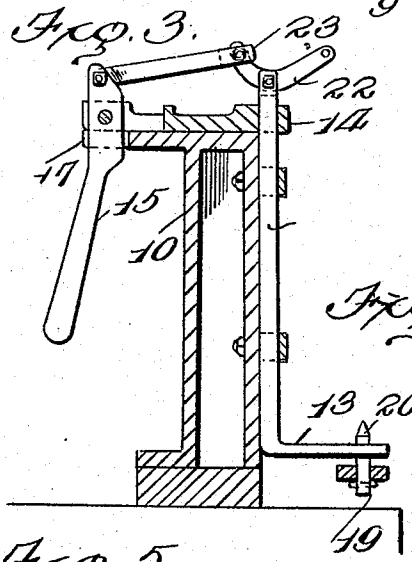

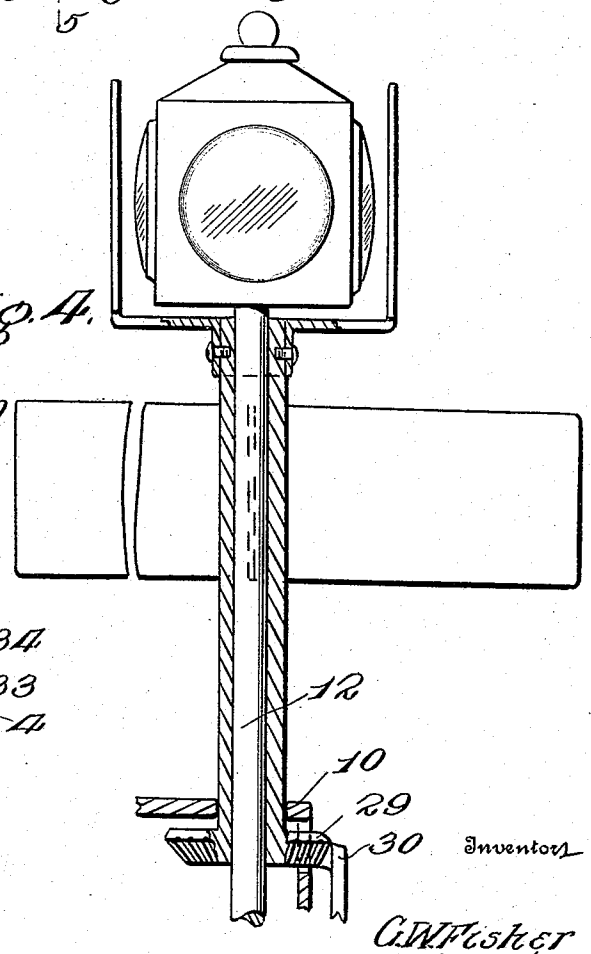

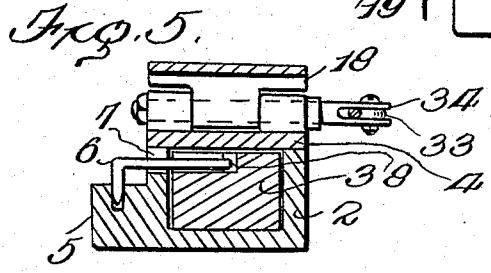

Witnesses

[signature]

W. N. Woodson

Inventors

G. W. Fisher

F. Hoyland, Jr.

By [signature] Attorneys

ANDREW. B. GRAHAM CO., PHOTO-LITHOGRAPHERS, WASHINGTON, D. C.

UNITED STATES PATENT OFFICE.

GEORGE W. FISHER AND FRED HOYLAND, JR., OF JACKSON, MICHIGAN.

SWITCH MECHANISM.

No. 930,370. Specification of Letters Patent. Patented Aug. 10, 1909.

Application filed September 22, 1908. Serial No. 454,201.

To all whom it may concern:

Be it known that we, GEORGE W. FISHER and FRED HOYLAND, Jr., citizens of the United States, residing at Jackson, in the county of Jackson and State of Michigan, have invented certain new and useful Improvements in Switch Mechanisms, of which the following is a specification.

The primary object of this invention is to combine with switch operating means indicating mechanism for showing the true position of the switch at all times, thereby giving warning, should the switch become deranged from any cause or be run through when locked in closed position.

The invention contemplates a switch bar composed of sections and a yieldable fastening between the sections to admit of movement of the switch member even though the stand member is held rigid and immovable.

The invention further contemplates a positive connection between the signaling means, such as the target and lamp and the switch member of the switch bar to insure correspondence of movement between the switch and the signaling means at all times and under all conditions, whereby the engineer may ascertain the position of the switch.

For a full understanding of the invention and the merits thereof and also to acquire a knowledge of the details of construction and the means for effecting the result, reference is to be had to the following description and accompanying drawings.

While the invention may be adapted to different forms and conditions by changes in the structure and minor details without departing from the spirit or essential features thereof, still the preferred embodiment is shown in the accompanying drawings, in which:

Figure 1 is a perspective view of a switch and switch stand embodying the invention. Fig. 2 is a horizontal section of the parts shown in Fig. 1. Fig. 3 is a section on the line 3—3 of Fig. 2, looking in the direction of the arrow. Fig. 4 is a detail view of a modification in which the lantern is stationary. Fig. 5 is a detail section of the switch bar on the line 5—5 of Fig. 2.

Corresponding and like parts are referred to in the following description and indicated in all the views of the drawings by the same reference characters.

The invention is applicable to any type of switch and comprises a switch stand, signaling means, switch operating devices and connecting means for transmitting movement to the operating parts.

The switch illustrated is of the split variety and comprises switch points 1 connected in the accustomed way for simultaneous movement and having connection with the switch stand by means of a switch bar of peculiar formation. The switch bar consists of two members which for convenience are designated as switch member and stand member by reason of their relative position. The switch member 2 is connected to the switch points, whereas the stand member 3 is connected to the switch operating part of the stand. The two members 2 and 3 are connected by yieldable fastening means to admit of the switch member moving under abnormal conditions, as when the switch is run through when closed and locked. The switch member is adapted to move in either direction according to the direction of movement of the switch when thrown from a given position by the passage of a train. The yieldable fastening means are of such formation as to secure the switch when thrown under abnormal conditions, thereby locking the same and preventing any rebound which would tend to throw the switch to an intermediate position. The signaling means having connection with the switch member move therewith and show the position of the switch irrespective of the position of the switch operating lever. The stand member 3 of the switch bar telescopes within the switch member 2, the latter being hollow and of such formation as to receive the member 3. In the specific construction, the switch member 2 is channeled in its upper side, the member 3 being fitted in the channel. A plate 4 closes the upper side of the channel of the member 2. The metal portion of the plate 4 is removable to admit of access being readily had to the fastening means between the members 2 and 3. A lock 5 is provided upon a side of the switch member 2 and is apertured to receive the bent end of a pin 6, the latter having its horizontal portion passed through a notch 7 formed in the upper edge of a side portion of the member 2 bordering upon the channel, The inner end of the pin 6 enters a seat 8 formed in the stand member 3, thereby causing the two members 2 and 3 of the switch bar to move together under normal conditions and to hold the switch member 2 in the required

position. Ratchet teeth 9 are formed in the stand member 3 at opposite sides of the seat 8 to receive the end of the pin 6 and lock the switch member when moved under abnormal conditions, such as by the running of a train through the switch, thereby locking the switch in the position thrown by the train running therethrough. A pin 6, seat 8 and ratchet teeth 9 constitute elements of the fastening or lock means between the switch and stand members 2 and 3 of the bar.

The switch stand 10 may be of any construction and is supplied with a switch operating mast 11 and a signaling mast 12. The switch operating mast 11 is provided at its lower end with a crank 13, and at its upper end with an arm 14, the latter overhanging the top of the switch stand and receiving at its outer end the switch lever 15, which is pivoted thereto so as to swing toward and from the horizontal. The arm 14 has a limited horizontal movement between stops 16 projected upward from the top of the switch stand. Notches 17 are formed in an edge of the switch stand top to receive the switch lever when thrown into a pendent position and thereby lock or secure the switch in the required position. A coupling bar 18 is pivotally connected to the switch member 2 of the switch bar and is adapted to make detachable connection with the crank 13. The crank 13 has connection with the stand member 3. As shown, a stud 19 is pendent from the crank 13 and enters an opening of the stand member 3 and serves as connecting means between the switch bar and the switch operating means.. A stud 20 projects vertically from the crank 13 and is adapted to enter an opening 21 near the free end of the coupling bar 18. The stud 20 is tapered at its upper end to insure its entrance into the opening 21. The coupling bar 18 is thrown into and out of operative position by means of the switch lever 15 with which it has connection. When the switch lever is moved into horizontal position, the coupling bar is lowered or thrown into operative engagement with the crank 13 and when the outer end of the switch lever 15 is thrown downward, the free end of the coupling bar 18 is moved upward or disconnected from the crank 13. A bell crank 22 is mounted upon the mast 11 and a link 23 connects one member thereof with the switch lever 15 and a link 24 connects the other member of the bell crank with the coupling bar. A swivel connection is provided between the link 24 and coupling bar to admit of turning of the mast 11 without straining the parts. As shown, an arch 25 is secured to the coupling bar 18 and spans the opening 21 and a swivel 26 is fitted to the horizontal portion of the arch and receives the lower end of the link 24.

The signaling mast 12 may be provided with the usual means for indicating the position of the switch both by day and by night, and, as shown, is supplied with a target and a lamp. A pointer 27 is movable with the mast 12 and coöperates with a scale 28 to indicate the position of the switch. A gear wheel 29 is fast to the mast 12 and meshes with a segment 30 pivoted to the switch stand. The segment 30 has connection with the switch bar so as to move therewith. A bar 31 is adjustably connected with the segment 30 preferably by means of screw thread. The lower portion of the bar 31 is flattened and formed with a series of openings 32. A link 33 is adapted to make adjustable connection with the bar 31 by having its bent end inserted in any one of the series of openings 32. The opposite end of the link 33 is connected with the switch member 2 of the switch bar. As shown, a pin 34 is passed through knuckles of the coupling bar and a plate 35 secured to the switch member 2, and one end of said pin projects and is slotted to receive the link 33 which is fastened thereto in any manner.

When the switch lever 15 is thrown into horizontal position for operating the switch, the coupling bar 18 is connected to the crank 13, thereby relieving the fastening or lock means between the members of the switch bar of the strain. After the switch has been thrown to the required position, the switch lever 15 is swung downward at its free end to make locking connection with the stand by entering one of the notches 17. As the switch lever is thrown downward, the coupling bar 18 is elevated, thereby disconnecting the same from the crank 13. Should the switch be moved as by the running of a train therethrough, the switch member 2 of the switch bar moves with the switch, the pin 6 giving or yielding to admit of such movement, said pin springing out of the seat 8 and engaging with a ratchet tooth 9 to hold the switch in the thrown position. As the switch member of the switch bar moves, the signaling mast 12 likewise receives a corresponding movement, thereby bringing the target or lamp, or both, into position to indicate to the engineer the exact position of the switch and thereby prevent a casualty by the next train. After the switch has been thrown by a moving train, the switch, cannot be operated by means of the switch lever until the parts have first been readjusted and the members 2 and 3 of the switch bar returned to normal position and secured by the fastening or like means.

In some instances it may be desirable to have the lamp fixed and to have the shield therefor movable, thereby preventing the light being extinguished by jar or shock. Such arrangement is shown in Fig. 4, in which the mast is hollow and carries the shield and target, the lantern being attached

to a fixed rod or bar secured to the switch stand.

Having thus described the invention, what is claimed as new is:

1. In switch operating means, the combination of a switch bar comprising relatively movable members, one of said members having a seat and ratchet teeth at the sides of the seat, and a pin fitted to the other member and normally having engagement with said seat and adapted under abnormal conditions to ride upon the ratchet teeth and interlock therewith to hold the members when moved under abnormal conditions.

2. In switch operating mechanism, the combination of a switch bar, comprising relatively movable members, lock means between said members to secure the same under normal conditions, a signaling mechanism, and connecting means between the signaling mechanism and the member of the switch bar having connection with the switch so as to move with the latter under all conditions and indicate the true position thereof.

3. In switch operating mechanism, the combination of a switch bar, comprising relatively movable members, fastening means between the members for securing the same under normal conditions and admitting of relative movement thereof under abnormal conditions, switch actuating means, and a coupling bar for connecting the member of the switch bar having connection with the switch with the switch actuating means and operated by the latter to be thrown into and out of operative position.

4. In switch operating means, the combination of a switch bar comprising switch and stand members, fastening means between said members, a mast having a crank in connection with the stand member of the switch bar, a coupling bar having connection with the said switch member and switch operating means having the coupling bar connected therewith for throwing said coupling bar into and out of operative position.

5. In switch operating means, the combination of a switch bar, comprising relatively movable members, fastening means between said members, a coupling bar having connection with one of said members, a mast having a crank, studs projected from opposite sides of the crank to make connection with a member of the switch bar and said coupling bar, and switch operating means having connection with the coupling bar for moving the same into or out of engagement with the other stud of said crank.

6. In combination, a switch bar comprising switch stand members having relative movement, fastening means for securing said members under normal conditions, a coupling bar having connection with said switch member, a mast having connection with the stand member of the switch bar, a switch lever for operating said mast, connecting means between said switch lever and coupling bar for throwing the latter into and out of operative position, signaling means, and connecting means between said signaling means and the switch member of said switch bar.

In testimony whereof we affix our signatures in presence of two witnesses.

GEO. W. FISHER. [L. S.]
FRED HOYLAND, JR. [L. S.]

Witnesses:
WM. H. BURNS,
CHAS. G. HILL.