(19) Europäisches Patentamt
European Patent Office
Office européen des brevets

(11) EP 0 554 100 B1

(12) **EUROPEAN PATENT SPECIFICATION**

(45) Date of publication and mention of the grant of the patent:
02.04.1997 Bulletin 1997/14

(51) Int. Cl.[6]: **A24D 3/02**

(21) Application number: **93300646.2**

(22) Date of filing: **28.01.1993**

(54) **Continuous belt**

Fortlaufendes Band

Courroie continue

(84) Designated Contracting States:
AT BE CH DE DK ES FR GB GR IE IT LI LU MC NL PT SE

(30) Priority: **31.01.1992 US 829876**
31.01.1992 US 828423

(43) Date of publication of application:
04.08.1993 Bulletin 1993/31

(73) Proprietor: **Philip Morris Products Inc.**
Richmond Virginia 23234 (US)

(72) Inventors:
- **Bubjinski II, Joseph F.**
Quinton, Virginia 23141 (US)
- **Garthaffner, Martin T.**
Midlothian, Virginia 23112 (US)
- **Atwell, Charles G.**
Mechanicsville, Virginia 23111 (US)
- **Belcastro, Marc D.**
Glen Allen, Virginia 23060 (US)

(74) Representative: **Marlow, Nicholas Simon**
Reddie & Grose
16, Theobalds Road
London WC1X 8PL (GB)

(56) References cited:
DE-A- 1 432 720
DE-A- 3 235 510
FR-A- 2 014 395
US-A- 3 464 324
US-A- 3 623 404
US-A- 4 861 324

Note: Within nine months from the publication of the mention of the grant of the European patent, any person may give notice to the European Patent Office of opposition to the European patent granted. Notice of opposition shall be filed in a written reasoned statement. It shall not be deemed to have been filed until the opposition fee has been paid. (Art. 99(1) European Patent Convention).

EP 0 554 100 B1

Printed by Rank Xerox (UK) Business Services
2.13.17/3.4

Description

The present invention relates to a continuous belt for use with apparatus for high speed delivery of free flowing material.

The present invention according to a first embodiment is directed to a laminated belt for use in a device which delivers free flowing material into receiving spaces separating filter plugs, as the plugs move on a conveyor (in the tobacco art, such a conveyor is called a garniture tape).

The present invention according to a second embodiment includes a pair of parallel endless belts with a series of units called pockets suspended between them. It is particularly useful for delivery of free flowing material in cigarette manufacturing. This invention is used in a device which delivers free flowing material, such as charcoal granules, into receiving spaces separating filter plugs, as the plugs move on a conveyor (in the tobacco art, such a conveyor is called a garniture tape).

Several devices in the prior art which insert free flowing material between filter plugs utilize belts. For example, U.S. 4,285,678 includes a belt. This belt travels around a plurality of wheels. During a portion of this travel; the belt moves parallel with and above the garniture tape. The garniture tape carries a row of axially aligned filter plugs separated by receiving spaces so that:the filter plugs travel between the garniture tape and the belt. The belt includes apertures registered with the receiving spaces separating the filter plugs. These apertures direct the free flowing material into the receiving spaces. The blank portions of the belt screen the filter plugs from exposure to the free flowing material.

Likewise, U.S. 3,464,324 includes a belt which travels over a row of filter plugs transported on a garniture tape(called a travelling folding tape in that patent). Granular material is deposited through apertures in this belt into the spaces between the plugs. The apertures in the belt are timed to register with the receiving spaces between the filter plugs.

Likewise, U.S. 3,464,324 includes an alternative embodiment utilizing a linked chain. This chain includes a web portion provided with a slot which allows the passage of granular material into voids separating filter plugs.

Several devices in the prior art, including one described in U.S. 3,623,404, include a belt or chain consisting of an endless series of links. In such devices, each link is connected to the preceding and following links forming an endless chain. The chain travels around a plurality of wheels or sprockets which provide the chain with drive, tension and position. The chain travels in part parallel with and. adjacent to a garniture tape transporting a series of axially aligned filter plugs separated by spaces.

The links comprising such chains contain channels or funnels capable of channelling particulate matter. As the chain and the garniture tape travel parallel with one another, the links travel adjacent to the axially aligned filter plugs. During this adjacent travel, the funnels within the links register with the spaces between the filter plugs, and a dispenser delivers particulate matter to the funnels within the links. The funnels channel this particulate matter into the adjacent receiving spaces.

The belts in the prior art help screen the filter plugs from exposure to the free flowing material. However, these belts do not hold the filter plugs in a stable position on the rapidly moving garniture tape.

The presently utilized chains can experience loss of tolerance in the connections between the individual links. Loss of tolerance in the connections causes variability in distance between the links, resulting in variability in distance between the apertures within the links. Due to this variability, apertures moving parallel with and adjacent to receiving spaces do not maintain registration with said spaces. This disfunction between apertures and receiving spaces results in inaccurate delivery of particulate material.

It has been desired to provide a laminated belt for use in a device which delivers free flowing material into receiving spaces between filter plugs.

It has further been desired to deliver free flowing material accurately into receiving spaces between filter plugs travelling at high speeds on a garniture tape.

It has also been desired to protect the filter plugs from exposure to the free flowing material.

The present invention, in one embodiment, provides a belt which is a lamination of a metal band and a composition strap. This laminated belt travels around a plurality of wheels on a course in part parallel with and adjacent to that of a garniture tape carrying axially aligned filter plugs. The composition strap conforms to the round shape of the filter plugs carried by the garniture tape. .During their parallel travel, the laminated belt urges the filter plugs against the garniture tape thereby holding the plugs in place.

A plurality of apertures extend completely through the belt. An independent means synchronizes the motion of the laminated belt with that of the garniture tape so that the apertures through the belt register with the receiving spaces between the filter plugs. Likewise, the blank portions of the belt register with the filter plugs, screening the filter plugs from exposure to the free flowing material. By urging the plugs against the garniture tape, the laminated belt holds the plugs securely in this registered configuration. A device known in the art, the charcoal chute, delivers particulate matter through the apertures in the belt into the receiving spaces separating the plugs.

By securely holding the filter plugs against the garniture tape, this laminated belt maintains registry of the belt apertures with the receiving spaces, even as the garniture tape transports the plugs at high speeds. Such stable registry allows for accurate delivery of free flowing material at very high speeds, while the laminated belt masks the filter plugs from exposure to the free flowing material.

It has also been desired to deliver free flowing material accurately into receiving spaces in separating axially aligned filter plugs, as the plugs travel at high speed on a garniture tape.

It has further been desired to provide a device including parallel belts with pockets suspended between them, for delivering free flowing material into receiving spaces between filter plugs.

In another embodiment, the present invention provides a device including two parallel endless belts with a series of units called pockets suspended between them. These pockets contain channels or funnels for channelling free flowing material.

In accordance with a first aspect of the present invention, there is provided a continuous belt for use with apparatus for constructing cigarette filters, which in use moves in synchrony with and in part parallel to a garniture tape conveying filter plugs in axial alignment, the belt having channels therethrough for, in use, channelling free flowing material into spaces between the filter plugs in the garniture tape, characterised in that the surface of the belt which in use opposes the garniture tape has a profile corresponding to that of a filter plug in the garniture tape, so that, in use the filter plugs are urged against the garniture tape.

Preferably, according to a first embodiment of the first aspect of the invention, the continuous belt comprises a metal band and a composition strap laminated onto one side of the metal band such that, in use, the composition strap opposes the garniture tape.

In a preferred form, according to a second embodiment of the first aspect of the invention, the continuous belt comprises a continuous band having a plurality of individual pockets attached thereto such that, in use, the undersurface of the pockets opposes the garniture tape.

In accordance with a second aspect of the present invention there is provided apparatus for inserting free flowing material into receiving spaces between filter plugs for use in constructing cigarette filters, comprising a laminated belt having a metal band with a composition strap laminated on one side, the belt further having apertures and travelling in part parallel with and adjacent to a garniture tape carrying the filter plugs, while the apertures in the belt channel particulate matter into the receiving spaces between the filter plugs and non-apertured parts of the belt mask the filter plugs from free flowing material.

Preferably, the laminated belt travels around a plurality of wheels so that the metal band contacts the wheels, the composition strap being laminated onto the side of the band away from the wheels, in an especially preferred form of the invention, the composition strap contacts the filter plugs as the laminated belt travels parallel with and adjacent to the garniture tape, the composition strap conforming to the shape of the filter plugs and the laminated belt urging the filter plugs against the garniture tape.

In accordance with a third aspect of the present invention there is provided apparatus for inserting free flowing material into receiving spaces between filter plugs for use in constructing cigarette filters, comprising two continuous parallel belts travelling around and between a plurality of sprockets with individual pockets suspended between the belts, said pockets including funnels to receive and channel free flowing material, the belts travelling in part parallel with and adjacent to a garnaiture tape carrying the filter plugs, while the funnels in the pockets channel free flowing material into the receiving spaces between the filter plugs.

Preferably, the under-surface of the pockets contacts the filter plugs as the belts carry the pockets parallel with and adjacent to the garniture tape, said under-surface terminating in a concave shape to accommodate the round shape of the filter plugs. More preferably, the parallel belts move in synchrony with the garniture tape so that the funnels in the pockets register with the receiving spaces between the filter plugs delivered by the garniture tape.

Embodiments of the invention will now be described, by way of example, with reference to the accompanying drawings, in which:-

FIG. 1 is a top plan view illustrating diagrammatically the basic relationship between the laminated belt and the wheels and motor;

FIG. 2 is a full frontal view of the apparatus of FIG. 1;

FIG. 3 is a sectional view on line I of FIG. 2;

FIG. 4 is a frontal sectional view in fragmentary form of the laminated belt of FIGS. 1 and 2, illustrating the basic relationship of the laminated belt to the filter plugs;

FIG. 5 is a perspective view in fragmentary form, illustrating diagrammatically the basis relationship between the laminated belt and a wheel;

FIG. 6 is a sectional view on line II of FIG. 4 illustrating the basic relationship of the laminated belt to the track, the garniture tape and the package;

FIG. 7 is a perspective view of an alternative embodiment of the wheel and the laminated belt of FIG. 2;

FIG. 8 is a perspective view of an alternative embodiment of the wheel and the laminated belt of FIG. 2;

FIG. 9 is a frontal sectional view in fragmentary form of an alternative embodiment of the laminated belt of FIGS. 1 and 2;

FIG. 10 is a sectional view on line III of FIG. 9;

FIG. 11 is a top plan view of an alternative embodiment of the laminated belt of FIG. 9.

FIG. 12 is a perspective view in fragmentary form of the second embodiment of the apparatus, illustrating diagrammatically the basic relationship of the parallel belts to the wheels and to a pocket;

FIG.13 is a side sectional view of the pocket, illustrating diagrammatically the basic relationship of the pocket to the wheel of FIG. 12;

FIG. 14 is a perspective view on fragmentary form

of the belt shown in Figure 12;

FIG. 15 is a perspective view in fragmentary form of the apparatus shown in Figure 12, illustrating diagrammatically the basic relationship of the pocket to the wheel;

FIG.16 is a side view in fragmentary form of the apparatus shown in Figure 12 illustrating diagrammatically the basic relationship of the pocket to the wheel;

FIG.17 is a top plan view in fragmentary form of the apparatus shown in Figure 12 illustrating diagrammatically the basic relationship of the pocket to the wheel;

FIG.18 is a perspective view of the pocket of FIGS. 12, 13, 15-17.

Referring to the drawings, FIGS. 1 through 6 illustrate the laminated belt designated generally by reference numeral 10. Laminated belt 10 travels around a plurality of wheels, including a drive wheel 11 and an idler wheel 12. Motor 15 powers drive wheel 11 which in turn applies power to move belt 10. Idler wheel 12 provides tension and position for laminated belt 10.

Laminated belt 10 is a lamination of metal band 20 and a composition strap 21. Metal band 20 engages directly with wheels 11 and 12. Composition strap 21 is laminated onto the side of metal band 20 opposite the wheels. Composition strap 21 may be formed of neoprene or other suitable composition materials. The neoprene composition strap 21 is molded from liquid neoprene,-which directly bonds to the metal band 20 without the need for adhesive. The composition strap 21 terminates in a concave shape 53. This concave shape 53 closely conforms to the round shape of filter plugs 26 in the partially constructed cigarette filters. Apertures 22 extend through both the metal band 20 and composition strap 21 portions of belt 10.

A flexible conveyor belt, the garniture tape 54, conveys filter plugs 26 separated by receiving spaces 24 along a course parallel with and beneath belt 10. The garniture tape 54 travels through a trough called a garniture 23. Garniture 23 is concave shaped. While garniture tape 54 travels through garniture 23, the garniture tape 54 assumes this concave shape. This concave shaped garniture tape accommodates the round shape of the axially aligned filter plugs 26 it conveys.

During the parallel travel of garniture tape 54 with the laminated belt 10, the composition strap 21 portion of laminated belt 10 contacts the filter plugs 26. During this contact, the composition strap 21 urges the filter plugs 26 against garniture tape 54 thus holding plugs 26 in a stable position.

An independent device known in the art, the synchronous drive, synchronizes the movement of laminated belt 10 with garniture tape 54 so that apertures 22 of belt 10 register with receiving spaces 24 between filter plugs 26. An independent device known in the art, the charcoal chute, delivers free flowing material through apertures 22 into receiving spaces 24. Concurrently, the non-apertured portions 25 of belt 10 mask the filter plugs 26 from exposure to the free flowing material.

By urging filter plugs 26 against garniture tape 54, composition strap 21 of belt 10 acts to firmly position filter plugs 26 as they are conveyed at high speeds on garniture tape 54. Such stable positioning maintains the accurate registry of apertures 22 with receiving spaces 24. Thus the stable positioning provided by belt 10 facilitates the accurate delivery of free flowing material into the receiving spaces 24 between filter plugs 26 as the plugs move at high speeds on garniture tape 54.

In one alternative embodiment represented in FIG. 7, laminated belt 10 includes apertures 36 along both lateral edges of the belt. Belt 10 travels around a plurality of wheels 50, each wheel including a row of radially extending teeth 52 positioned around its circumference. The teeth 52 of wheels 50 engage with the apertures 36 of laminated belt 10. In a similar alternative embodiment represented in FIG. 8, laminated belt 10 travels around single end wheels 51 each with a parallel pair of radially extending teeth 52 positioned around its circumference. The teeth 52 of wheels 51 engage with the apertures 36 of laminated belt 10.

In the embodiments represented in FIGS. 7 and 8, apertures 22 extend through laminated belt 10 between the lateral rows of sprocket engaging apertures 36. Apertures 22 serve as ports through which a standard device known,in the art delivers free flowing material to receiving spaces 24. These embodiments may utilize forward facing louvers 37, represented in FIGS. 9, 10, and 11, positioned above apertures 22 in the middle of belt 10. These louvers 37 work to capture particulate matter like a scoop.

Referring to the drawings of the second embodiment, FIGS. 12 and 13 illustrate the parallel belts 40 with a pocket 41 suspended between them. FIG. 14 illustrates the belt 40. FIGS. 15 through 17 illustrate the relationship of the end sprockets 38 with a pocket 41. FIG. 18 illustrates the pocket 41.

Belts 40 each travel around end sprockets 38 which provide drive, tension and position for belts 40. Belts 40 may be standard industrial grade belts found on the market, such as the high torque drive belt 1890 14 M 55 made by T.B. Wood's Sons Co. These belts need not be specially fabricated. Two identical belts 40 may be created by simply cutting one high torque drive belt lengthwise.

These high torque drive belts include semicircular shaped projections 57 regularly spaced around the belt's inner surface 58. A series of recesses 59 are evenly spaced around the outer circumference of the sprockets 38. These recesses 59 correspond with, accommodate and mate with the belt projections 57 as the belts 40 travel around and between the sprockets 38.

Free flowing material channelling devices called pockets 41 are suspended between the parallel belts 40. As the sprockets 38 turn, they drive the parallel belts 40 which in turn transport the pockets 41 suspended

between them. Each pocket 41 includes one or more funnels 42 functioning to channel free flowing material. The pockets 41 are fastened between belts 40 using steel pins 43 which extend completely through pockets 41 and belts 40. Each of the four corners 44 of pockets 41 are attached by a steel pin 43 to a belt 40. Pins 43 pass through belts 40 surrounded by bushing 45. Pins 43 then each pass through a roller 46 on the opposite side of belt 40.

As the belts travel around the end sprockets, the rollers 46 travel in part within a groove-like track 52. This track 52 serves to contain the rollers and thus securely position the attached pockets 41. Also, pockets 41 directly communicate with and slide within positioning track 27 , an arrangement which further serves to position pockets 41. This positioning track 27 terminates beneath the travel of the pockets 41 in a round shaped trough called a garniture 23. A flexible garniture tape 54 travels through garniture 23 assuming the round shape of garniture 23. The round shaped garniture 23 accommodates the round shape of the filter plugs 26 which travel through garniture 23 on garniture tape 54.

The garniture tape 54 transports filter plugs 26 in an axially aligned configuration, each plug separated by a,receiving space 24. Parallel belts 40 travel in part parallel with the travel of garniture tape 54 such that the pockets 41 travel adjacent to the filter plugs 26 transported on garniture tape 54. The pockets 41 contact the filter plugs 26 during this adjacent travel. The under surface 55 of the pockets 41 terminates in a concave shape 55 to closely accommodate the round shape of filter plugs 26.

A known synchronous drive (not shown) synchronizes the travel of the belts 40 with the travel of the garniture tape 54. This synchrony ensures that funnels 42 of pockets 41 register with the receiving spaces 24 between the filter plugs 26, while pockets 41 and garniture tape 54 travel parallel with one another. The registry of funnels 42 with receiving spaces 24 allows a known charcoal chute device (not shown) to deliver free flowing material through funnels 42 into receiving spaces 24. The non-funnel portion 56 of pockets 41 act to mask the filter plugs from exposure to the free flowing material.

Belts 40 carry pockets 41 suspended at constant, non-variable intervals, facilitating the precise registration of the funnels 42 with the receiving spaces 24. This precise registration in turn facilitates the accurate delivery of free flowing material into the receiving spaces 24 between filter plugs 26 as the plugs move at high speeds on garniture tape 54.

One skilled in the art will appreciate that the present invention can be practiced by other than the described embodiments, which are presented for purposes of illustration and not of limitation and the present invention is limited only by the claims which follow.

Claims

1. A continuous belt (10) for use with apparatus for constructing cigarette filters, which in use moves in synchrony with and in part parallel to a garniture tape (54) conveying filter plugs (26) in axial alignment, the belt having channels (22) therethrough for, in use, channelling free flowing material into spaces (24) between the filter plugs (26) in the garniture tape (54), characterised in that the surface of the belt which in use opposes the garniture tape (54) has a profile corresponding to that of a filter plug (26) in the garniture tape (54), so that, in use the filter plugs (26) are urged against the garniture tape (54).

2. A continuous belt (10) according to claim 1, having regularly spaced perforations (36) positioned near both lateral edges of the belt for, in use, engaging teeth (52) positioned around the circumference of a wheel (50) around which the belt passes.

3. A continuous belt (10) according to claim 1 or 2, comprising a metal band (20) and a composition strap (21) laminated onto one side of the metal band (20) such that, in use, the composition strap (21) opposes the garniture tape (54).

4. A continuous belt according to Claim 3, in which the composition strap (21) has a groove (53) for, in use, accommodating the filter plugs (26) conveyed on the garniture tape (54).

5. A continous belt according to any of claims 3 or 4, further comprising louvres (37) on the surface of the metal band, projecting over the apertures of the channels (22) in the belt for, in use, scooping free flowing material into the channels (22).

6. A continous belt according to claim 1, comprising a continuous band (40) having a plurality of individual pockets (41) attached thereto such that, in use, the undersurface (55) of the pockets (41) opposes the garniture tape (54).

7. A continuous belt according to claim 6, comprising two parallel continous bands (40) coupled together with the individual pockets (41) which are attached thereto, the pockets (41) bridging the gap between the bands (40).

8. A continous belt according to claim 6 or 7, in which each pocket (41) has a funnel (42) for, in use, receiving and channelling free flowing material.

9. A continous belt according to any of claims 6 to 8, in which the undersurface (55) of each pocket (41) has a groove for, in use, accommodating the filter plugs (26) conveyed on the garniture tape (54).

10. A continuous belt according to any of claims 6 to 9, in which pins (43) attach the pockets (41) to the band or bands (40) and, in use, attach to a roller (46) on one side of the continuous band (40).

11. A continuous belt according to any of claims 6 to 10, in which the pockets (41) are each attached to the band or bands (40) by at least one pin (43) which extends from the pocket across the band to a corresponding roller (46) to one side of the belt.

12. A continous belt according to claim 10 or 11 in which, in use, the rollers (46) travel in part through a track (52) for positioning the pockets (41) relative to the garniture tape (54).

13. A continous belt (10) according to any preceding claim, wherein an independent device is used to synchronize the continuous belt with the garniture tape (54) so that the channels (22,42) are registered with spaces (24) between filter plugs (26) in the garniture tape (54).

14. A cigarette-filter making machine having a garniture tape (54) for conveying filter plugs (26) in axial alignment and a continuous belt (10) for urging the filter plugs (26) against the garniture tape (54) when moving in synchrony with and in part parallel to the garniture tape (54), the continuous belt (10) being in accordance with any of Claims 1 to 13.

Patentansprüche

1. Endlosband (10) zur Verwendung mit einer Vorrichtung zur Ausbildung von Zigarettenfiltern, welches sich im Betrieb synchron mit und teilweise parallel zu einem Formatband (54) bewegt, das Filterpfropfen (26) in axialer Ausrichtung transportiert, wobei das Band Durchgangskanäle (22) aufweist, um im Betrieb freiströmendes Material in Räume (24) zwischen den Filterpfropfen (26) in dem Formatband (54) zu leiten, dadurch gekennzeichnet, daß die Oberfläche des Bandes, welche im Betrieb dem Formatband (54) gegenüberliegt, ein Profil aufweist, das dem eines Filterpfropfens (26) in dem Formatband (54) entspricht, so daß im Betrieb die Filterpfropfen (26) gegen das Formatband (54) gedrückt werden.

2. Endlosband (10) nach Anspruch 1, mit regelmäßig in Abstand zueinander liegenden Perforationen (36), die nahe beider Seitenkanten des Bandes positioniert sind, um im Betrieb an Zähne (52) anzugreifen, die um den Umfang eines Rades (50) positioniert sind, um welches das Band herumläuft.

3. Endlosband (10) nach Anspruch 1 oder 2, mit einem Metallband (20) und einem Kunstharzband (21), das auf eine Seite des Metallbandes (20) laminiert ist, derart, daß im Betrieb das Kunstharzband (21) dem Formatband (54) gegenüberliegt.

4. Endlosband nach Anspruch 3, in welchem das Kunstharzband (21) eine Rinne (53) aufweist, um im Betrieb die auf dem Formatband (54) beförderten Filterpfropfen (26) aufzunehmen.

5. Endlosband nach einem der Ansprüche 3 oder 4, ferner mit Aufsätzen (37) auf der Oberfläche des Metallbandes, die über die Öffnungen der Kanäle (22) in dem Band vorstehen, um im Betrieb freiströmendes Material in die Kanäle (22) zu befördern.

6. Endlosband nach Anspruch 1, mit einem Endlosband (40), das eine Mehrzahl von einzelnen Taschengliedern (41) aufweist, die derart daran angebracht sind, daß im Betrieb die Unterfläche (55) der Taschenglieder (41) dem Formatband (54) gegenüberliegt.

7. Endlosband nach Anspruch 6, mit zwei parallelen Endlosbändern (40), die mittels der einzelnen Taschenglieder (41), die daran angebracht sind, miteinander verbunden sind, wobei die Taschenglieder (41) die Lücke zwischen den Bändern (40) überbrücken.

8. Endlosband nach Anspruch 6 oder 7 in welchem jedes Taschenglied (41) einen Trichter (42) aufweist, um im Betrieb freiströmendes Material aufzunehmen und zu leiten.

9. Endlosband nach einem der Ansprüche 6-8, in welchem die Unterfläche (55) jedes Taschengliedes (41) eine Rinne aufweist, um im Betrieb die auf dem Formatband (54) beförderten Filterpfropfen (26) aufzunehmen.

10. Endlosband nach einem der Ansprüche 6-9, in welchem Stifte (43) die Taschenglieder (41) an dem Band bzw. den Bändern (40) anhängen und im Betrieb an einer Rolle (46) auf einer Seite des Endlosbandes (40) anhängen.

11. Endlosband nach einem der Ansprüche 6-10, in welchem die Taschenglieder (41) jeweils durch wenigstens einen Stift (43), welcher sich von dem Taschenglied quer über das Band zu einer entsprechenden Rolle (46) auf einer Seite des Bandes erstreckt, an dem Band bzw. den Bändern (40) angehängt sind.

12. Endlosband nach Anspruch 10 oder 11, in welchem sich im Betrieb die Rollen (46) zum Positionieren der Taschenglieder (41) in bezug zum Formatband (54) teilweise über eine Schiene (52) bewegen.

13. Endlosband (10) nach einem vorstehenden

Anspruch, in welchem eine unabhängige Vorrichtung verwendet wird, um das Endlosband mit dem Formatband (54) zu synchronisieren, so daß die Kanäle (22, 42) mit Räumen (24) zwischen den Filterpfropfen (26) in dem Formatband (54) in Dekkung gebracht werden.

14. Herstellungsmaschine für Zigarettenfilter mit einem Formatband (54) zum Befördern von Filterpfropfen (26) in axialer Ausrichtung und einem Endlosband (10) zum Drücken der Filterpfropfen (26) gegen das Formatband (54), wenn sich dieses in Synchronität mit und teilweise parallel zu dem Formatband (54) bewegt, wobei das Endlosband (10) in Übereinstimmung mit einem der Ansprüche 1-13 vorliegt.

Revendications

1. Courroie continue (10) destinée à un appareil de construction de filtres de cigarettes, qui au cours du fonctionnement se déplace en synchronisme avec et de manière partiellement parallèle à une bande de garniture (54) qui transporte des filtres (26) alignés axialement, la courroie étant traversée de canaux (22) destinés au cours du fonctionnement à canaliser un matériau circulant librement et à le faire pénétrer dans des espacements (24) disposés entre les filtres (26) de la bande de garniture (54), caractérisée en ce que la surface de la courroie qui au cours du fonctionnement est opposée à la bande de garniture (54) a un profil qui correspond à celui d'un filtre (26) de la bande de garniture (54), de façon à ce qu'au cours du fonctionnement, les filtres (26) soient appuyés contre la bande de garniture (54).

2. Courroie continue (10) selon la revendication 1, ayant des perforations (36) régulièrement espacées et positionnées à proximité des deux bords latéraux de la courroie pour, au cours du fonctionnement, enclencher des dents (52) positionnées à la périphérie d'une roue (50) autour de laquelle circule la courroie.

3. Courroie continue (10) selon la revendication 1 ou 2, comprenant une bande métallique (20) et un ruban composé (21) laminé sur un côté de la bande métallique (20) de façon à ce qu'au cours du fonctionnement, le ruban composé (21) soit opposé à la bande de garniture (54).

4. Courroie continue selon la revendication 3, dans laquelle le ruban composé (21) a une gorge (53) destinée, au cours du fonctionnement, à recevoir les filtres (26) qui sont transportés sur la bande de garniture (54).

5. Courroie continue selon l'une quelconque des revendications 3 ou 4, comprenant en outre des louvres (37) disposés à la surface de la bande métallique, qui font saillie par dessus les ouvertures des canaux (22) de la courroie, et qui sont destinés, au cours du fonctionnement, à faire pénétrer un matériau circulant librement à l'intérieur des canaux (22).

6. Courroie continue selon la revendication 1, comprenant une bande continue (40) ayant une pluralité de poches individuelles (41) qui lui sont fixées, de telle sorte qu'au cours du fonctionnement la surface inférieure (55) des poches (41) soit opposée à la bande de garniture (54).

7. Courroie continue selon la revendication 6, comprenant deux bandes continues parallèles (40) reliées ensemble aux poches individuelles (41) qui lui sont fixées, les poches (41) comblant l'espacement entre les bandes (40).

8. Courroie continue selon la revendication 6 ou 7, dans laquelle chaque poche (41) a un conduit de cheminée (42) destiné, au cours du fonctionnement, à recevoir et à canaliser un matériau circulant librement.

9. Courroie continue selon l'une quelconque des revendications 6 à 8, dans laquelle la surface inférieure (55) de chaque poche (41) a une gorge qui est destinée, au cours du fonctionnement, à recevoir les filtres (26) transportés sur la bande de garniture (54).

10. Courroie selon l'une quelconque des revendications 6 à 9, dans laquelle des goupilles (43) fixent les poches (41) à la bande ou aux bandes (40) et qui, au cours du fonctionnement, sont fixées à un rouleau (46) sur un côté de la bande continue (40).

11. Courroie continue selon l'une quelconque des revendications 6 à 10, dans laquelle les poches (41) sont chacune fixées à la bande ou aux bandes (40) par au moins une goupille (43) qui traverse la bande en partant de la poche jusqu'à un rouleau correspondant (46) sur un côté de la courroie.

12. Courroie continue selon la revendication 10 ou 11 dans laquelle, au cours du fonctionnement, les rouleaux (46) se déplacent partiellement sur une piste (62) afin de positionner les poches (41) par rapport à la bande de garniture (54).

13. Courroie continue (10) selon l'une quelconque des revendications précédentes, dans laquelle un dispositif indépendant est utilisé pour synchroniser la courroie continue avec la bande de garniture (54) pour que les canaux (22, 42) soient repérés de telle sorte que les espacements (24) soient placés entre les filtres (26) de la bande de garniture (54).

14. Machine à fabriquer des filtres de cigarettes ayant une bande de garniture (54) destinée à transporter des filtres (26) alignés axialement et une courroie continue (10) destinée à appuyer les filtres (26) contre la bande de garniture (54) lorsqu'elle se déplace en synchronisme avec et de manière partiellement parallèle à la bande de garniture (54), la courroie continue (10) étant conforme à l'une quelconque des revendications 1 à 13.

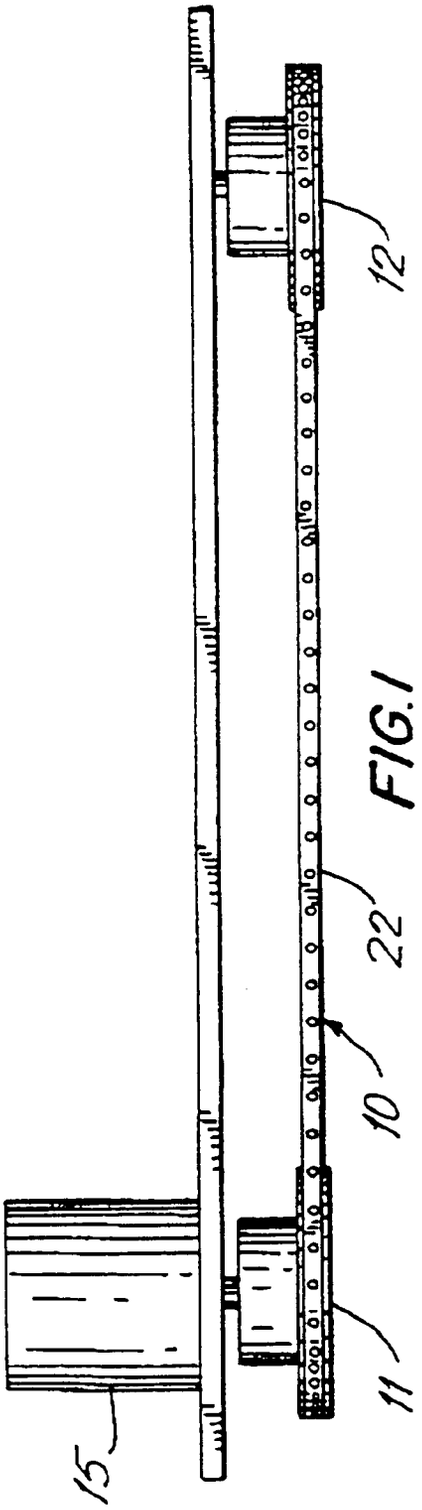

FIG.1

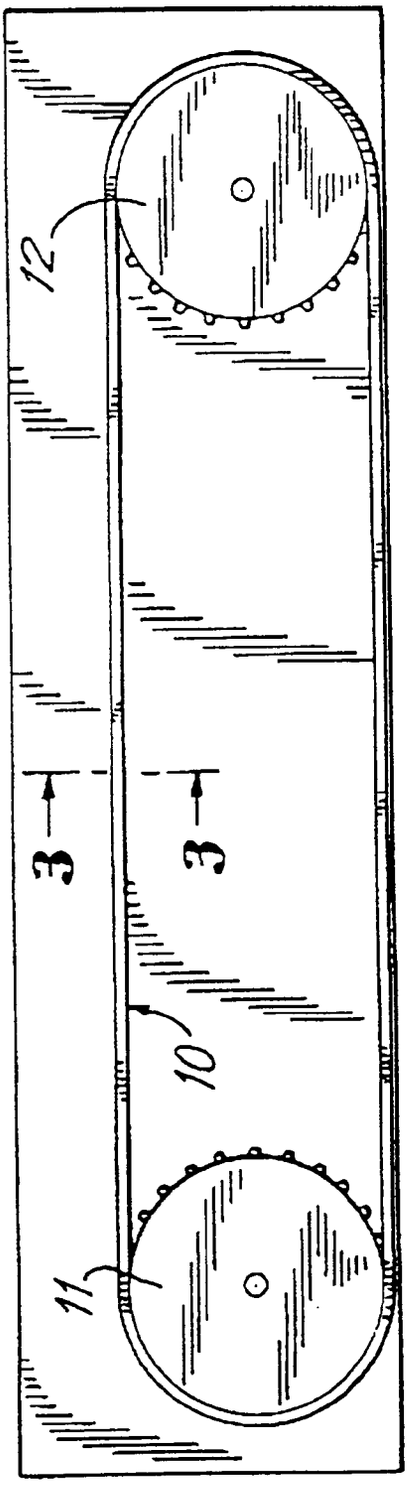

FIG.2

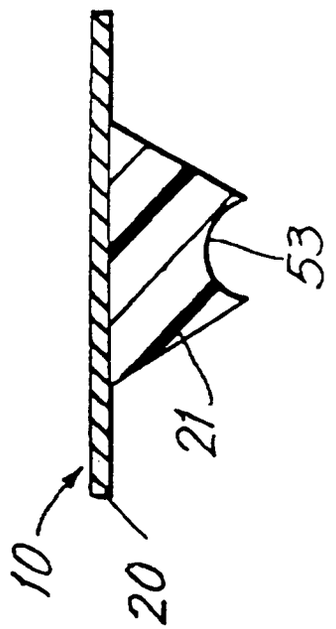

FIG.3

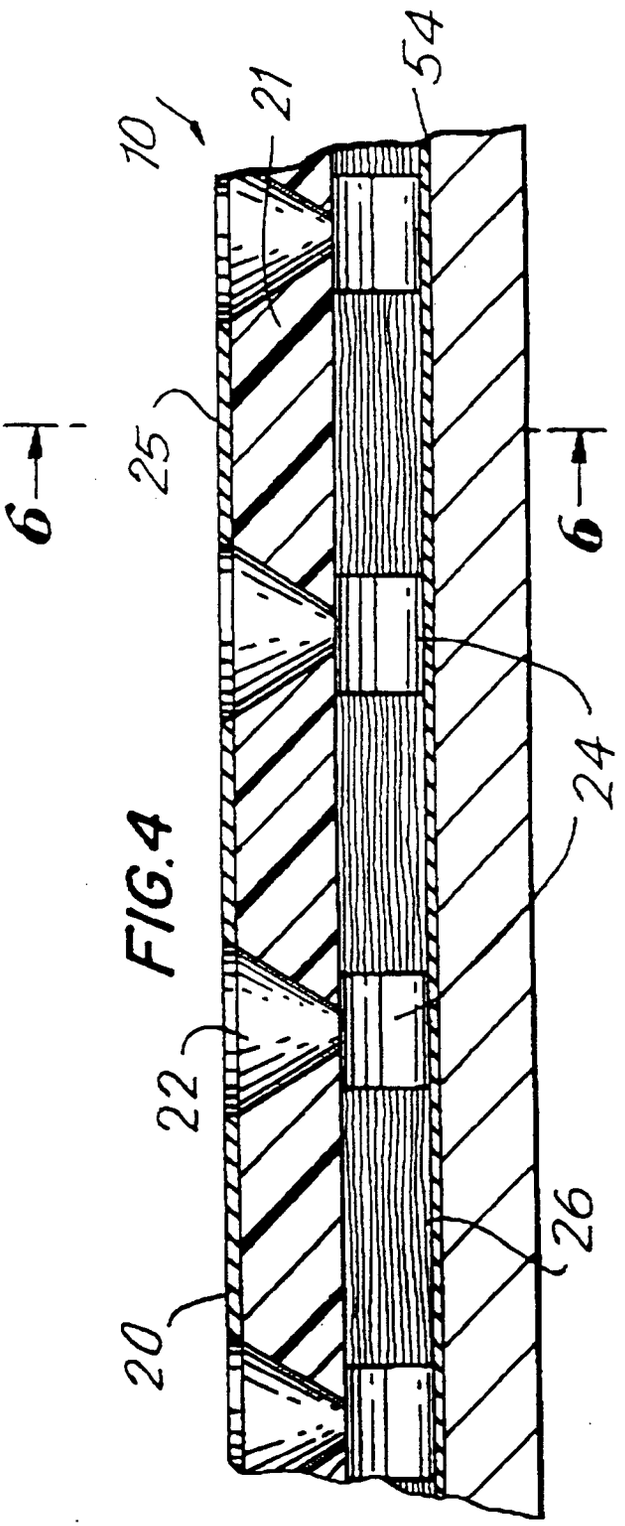

FIG.4

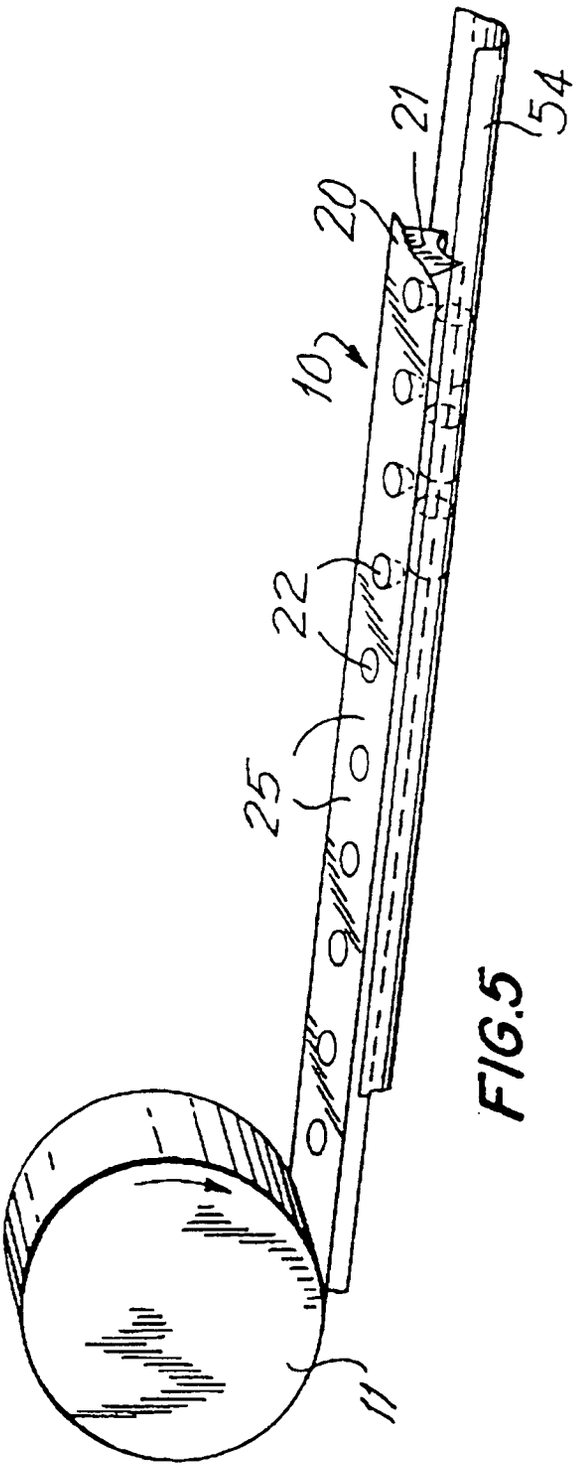

FIG.5

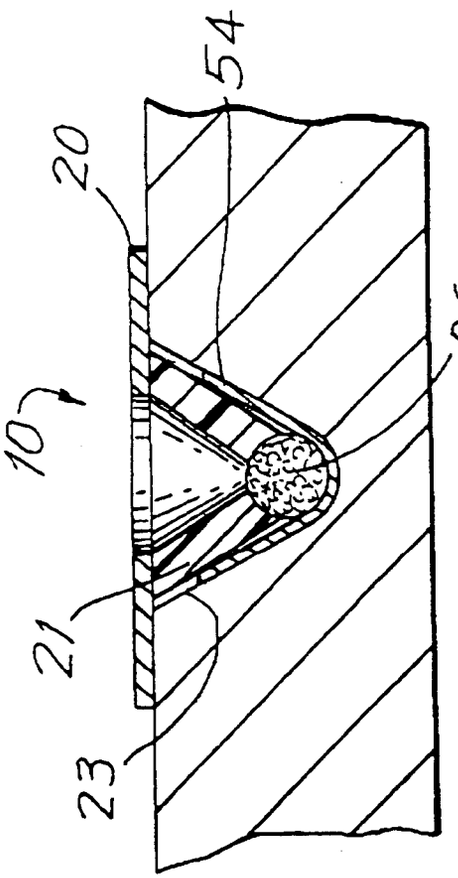

FIG.6

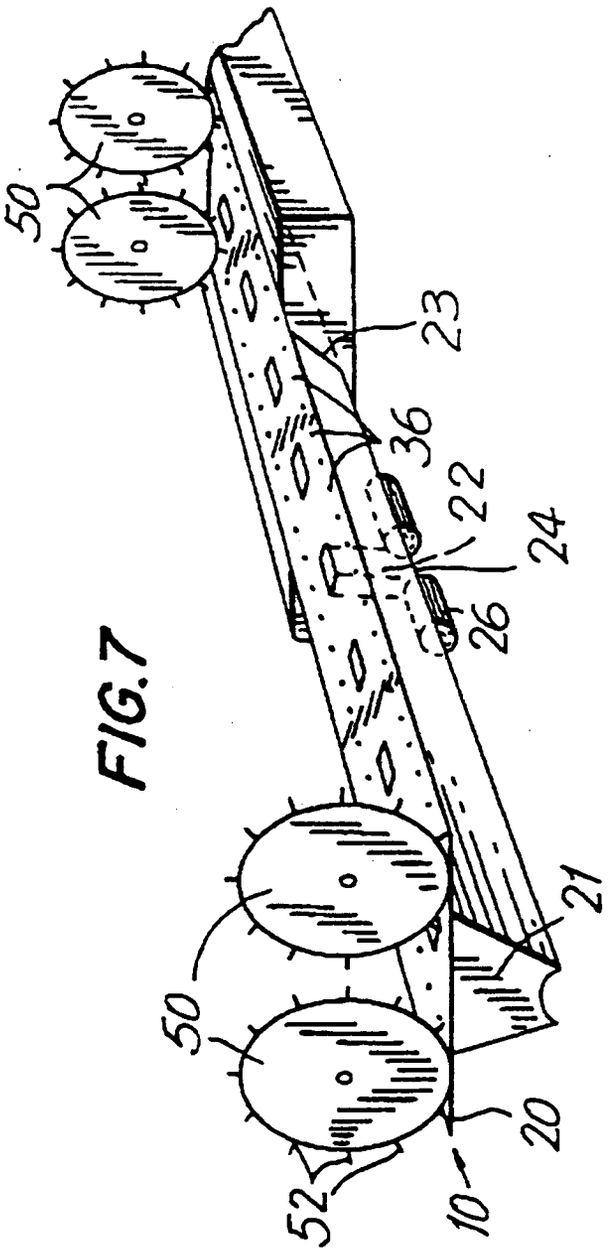

FIG.7

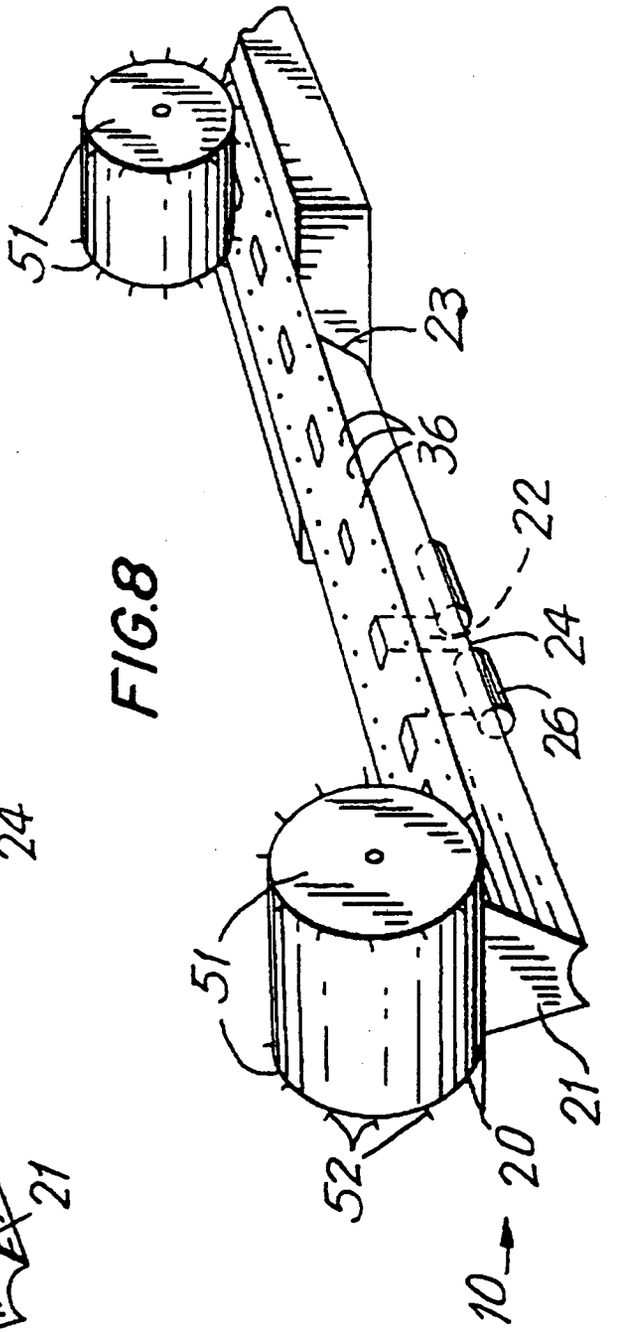

FIG.8

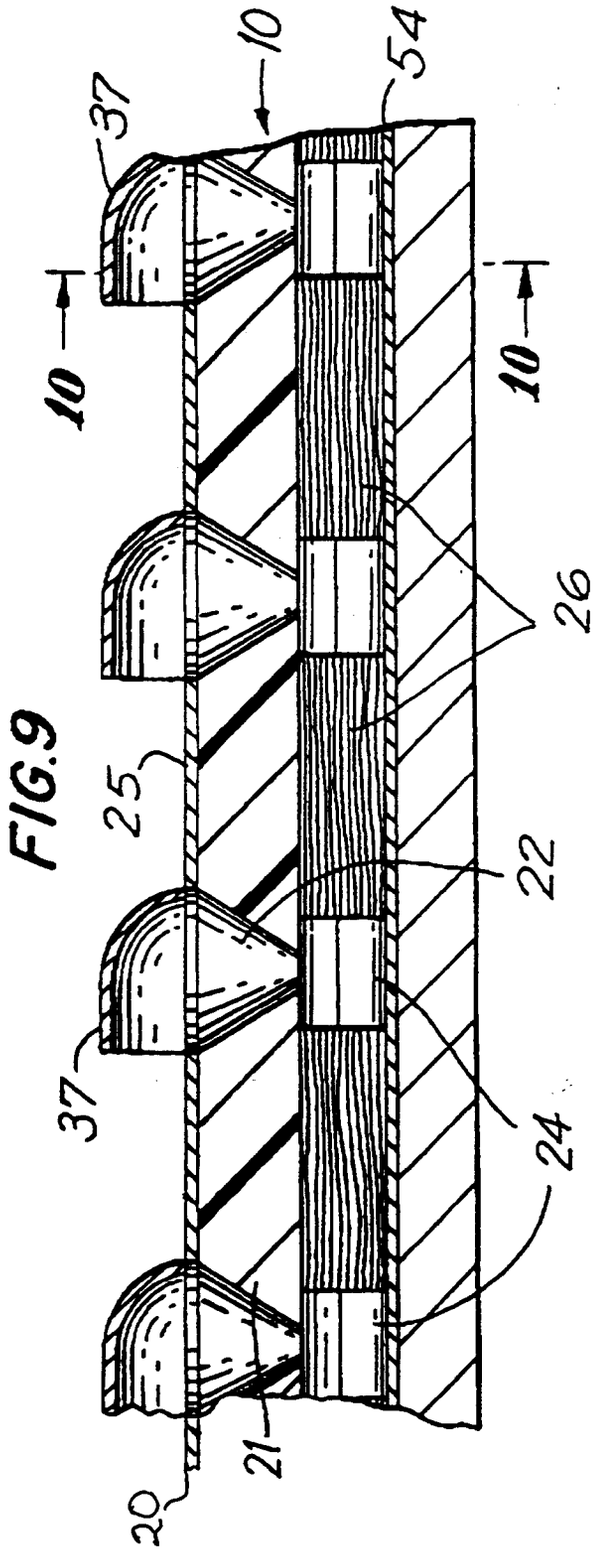

FIG.9

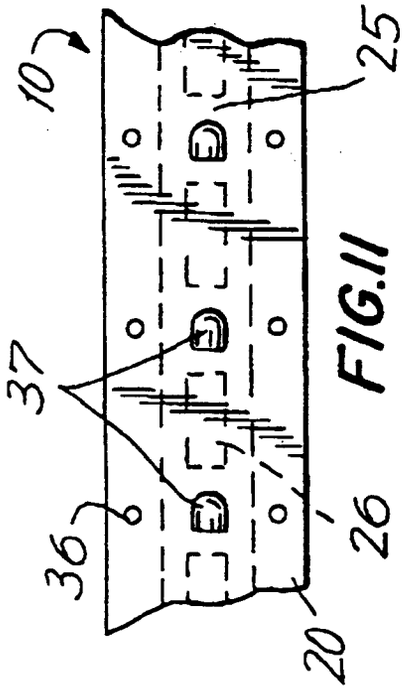

FIG.11

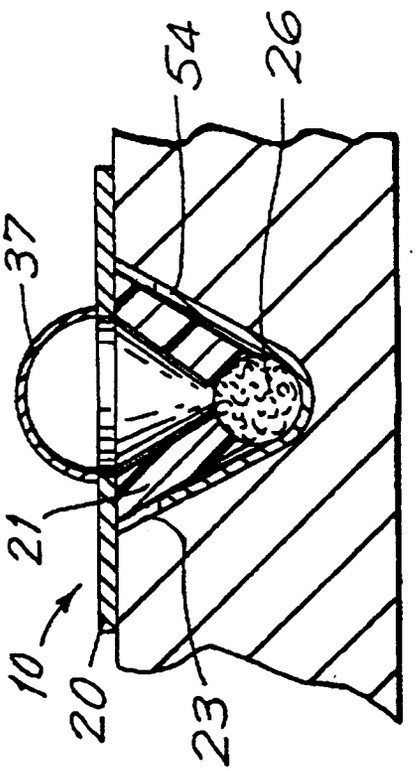

FIG.10

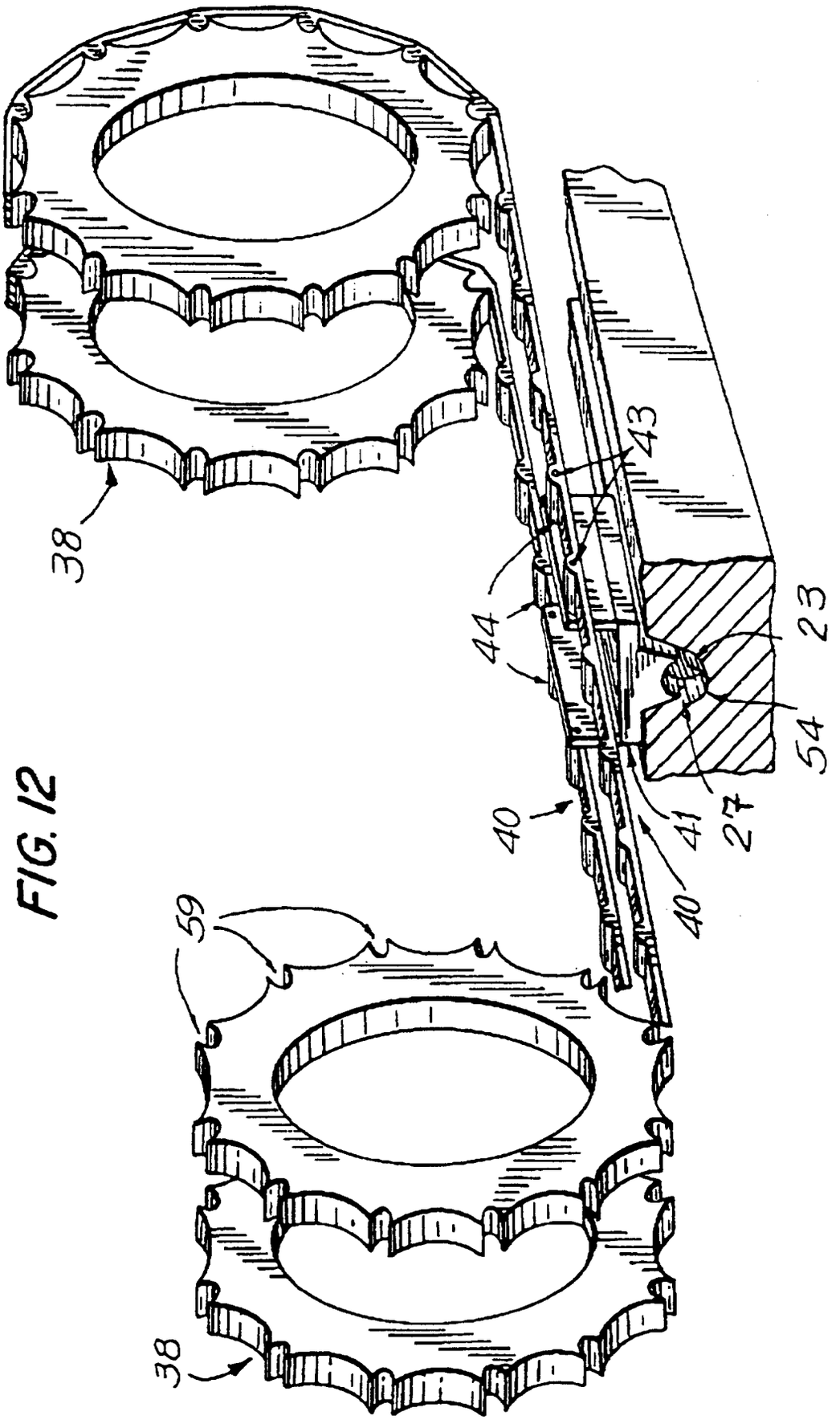

FIG. 12

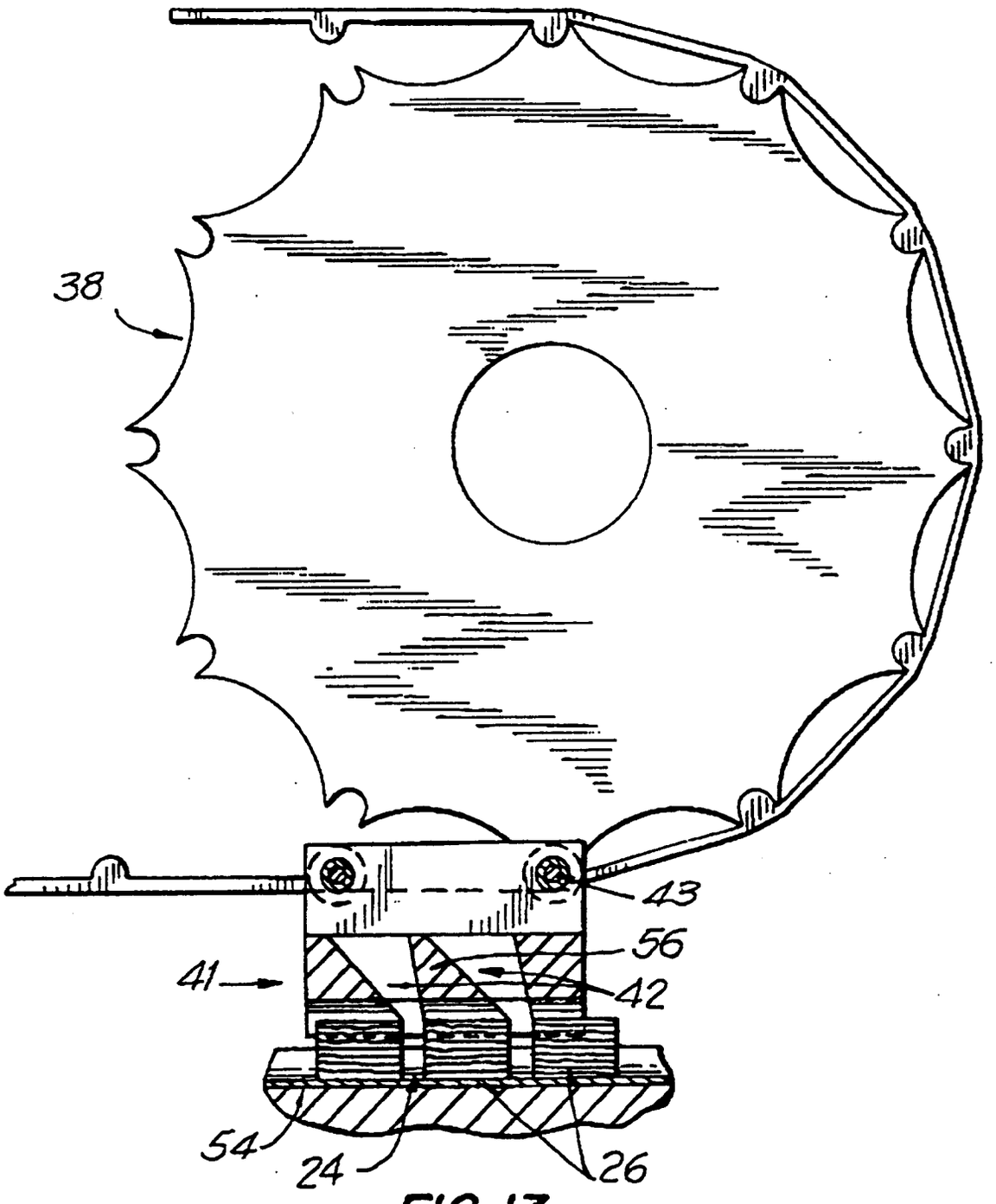

FIG. 13

FIG. 14

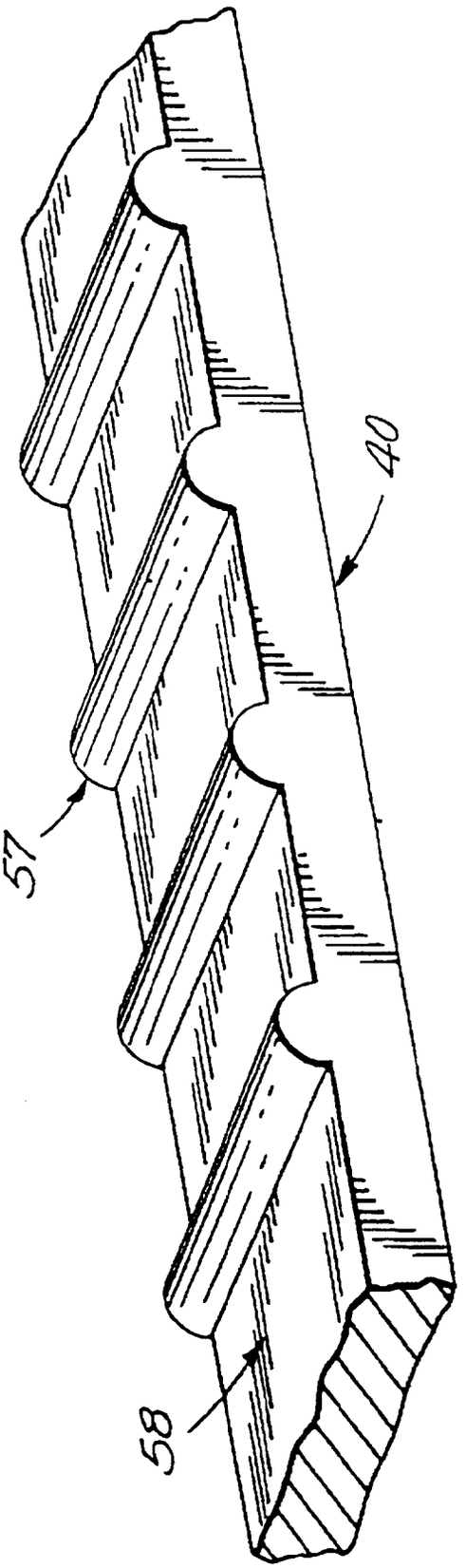

FIG. 15

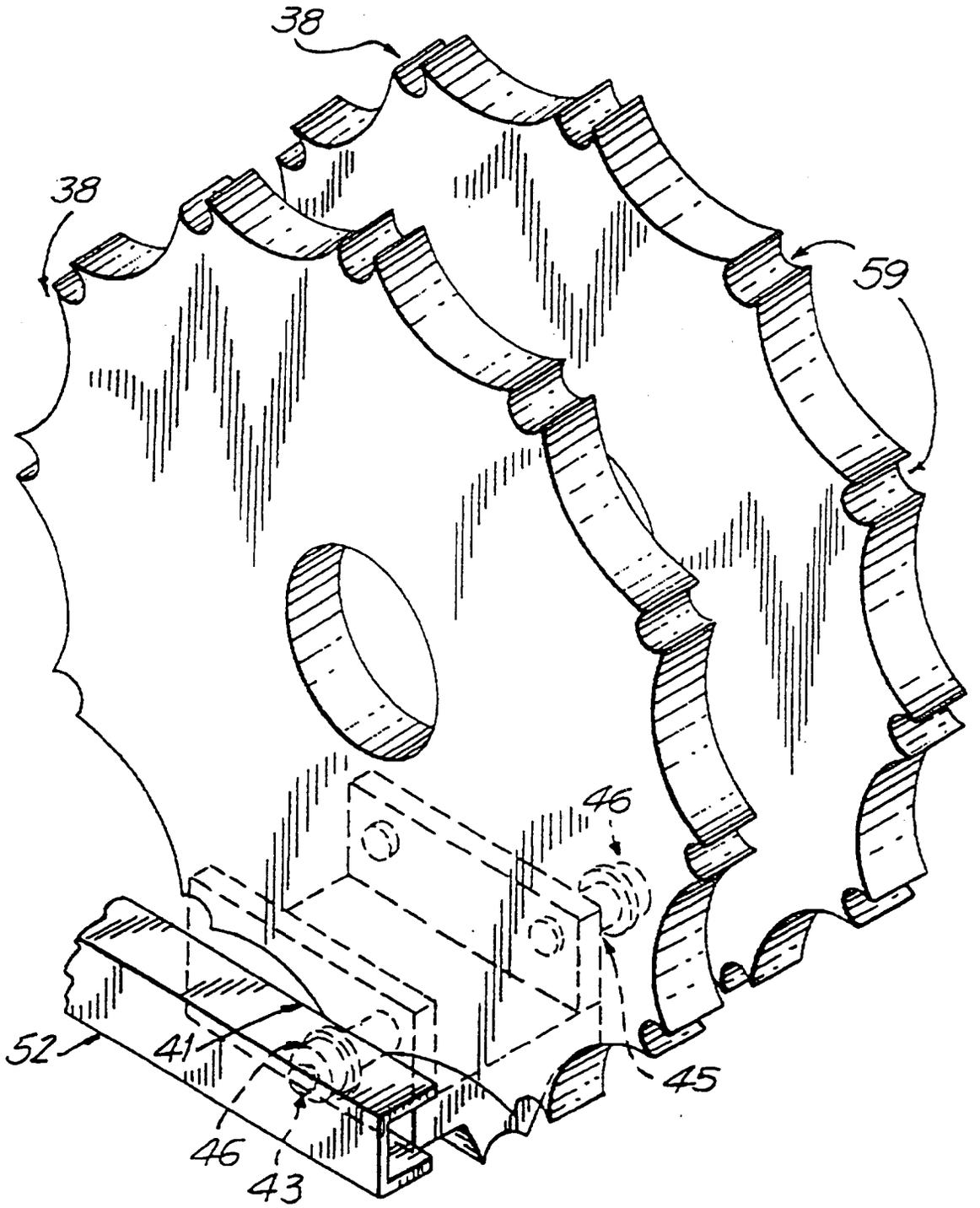

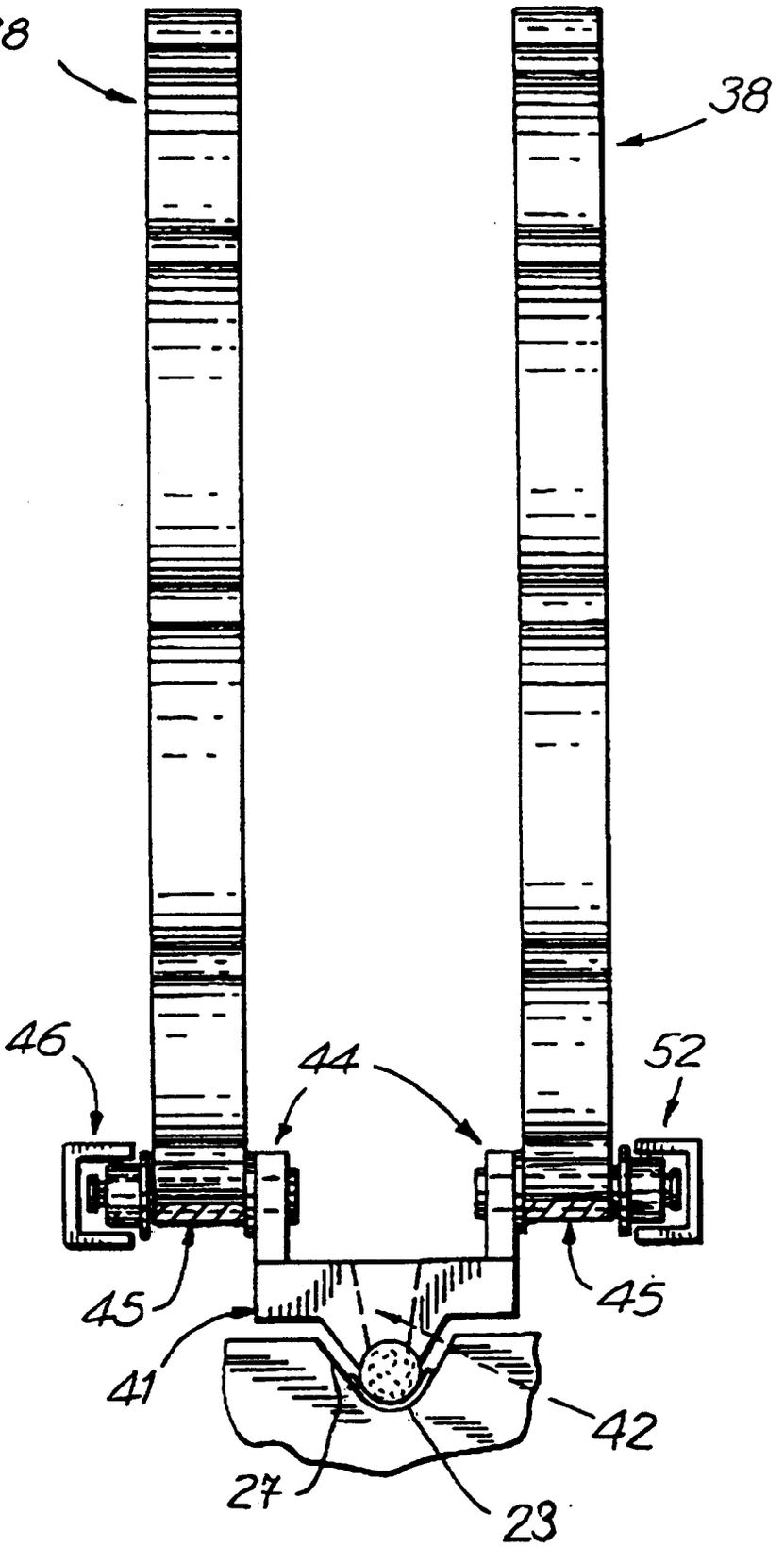

FIG. 16

FIG. 17

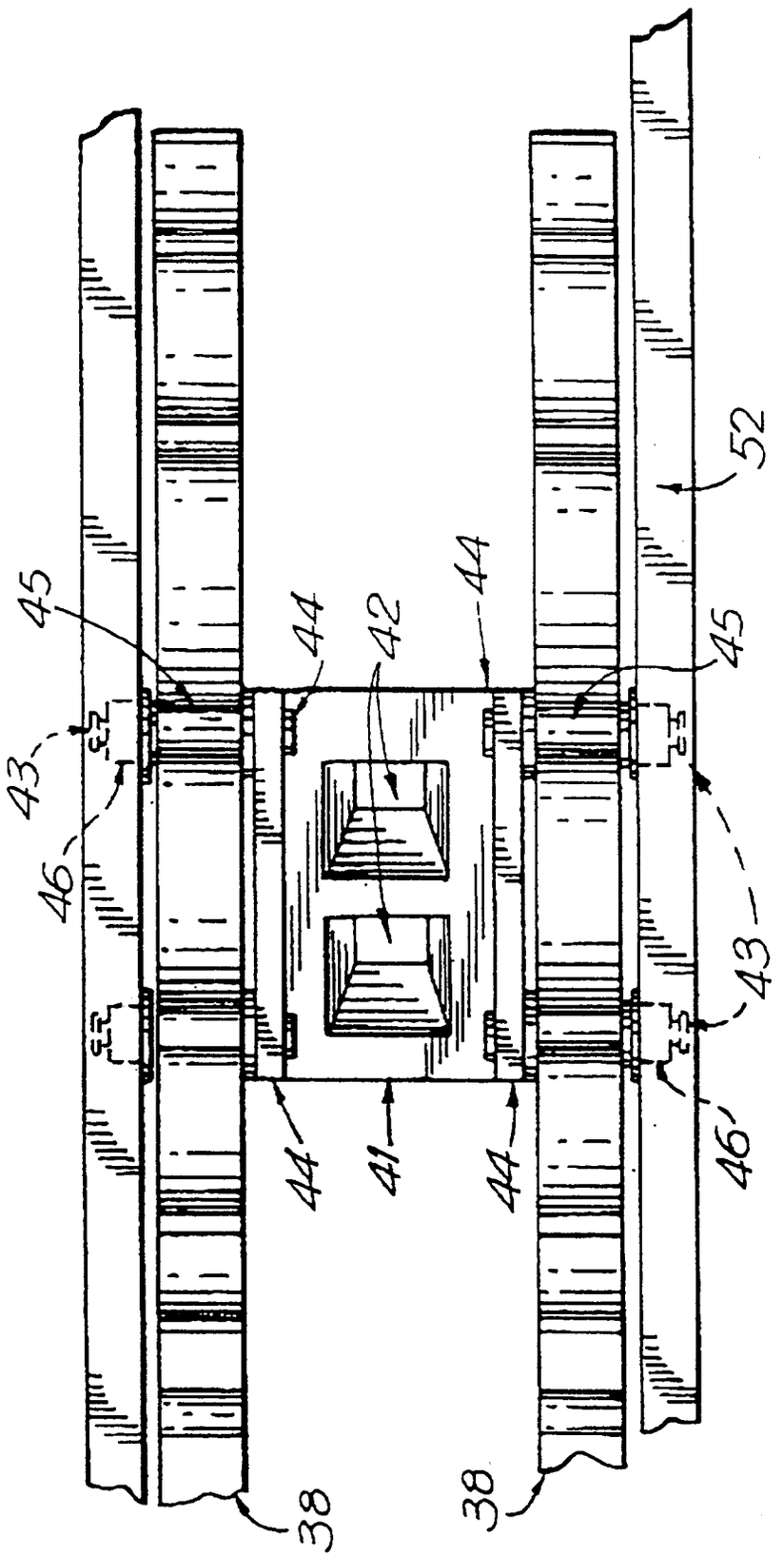

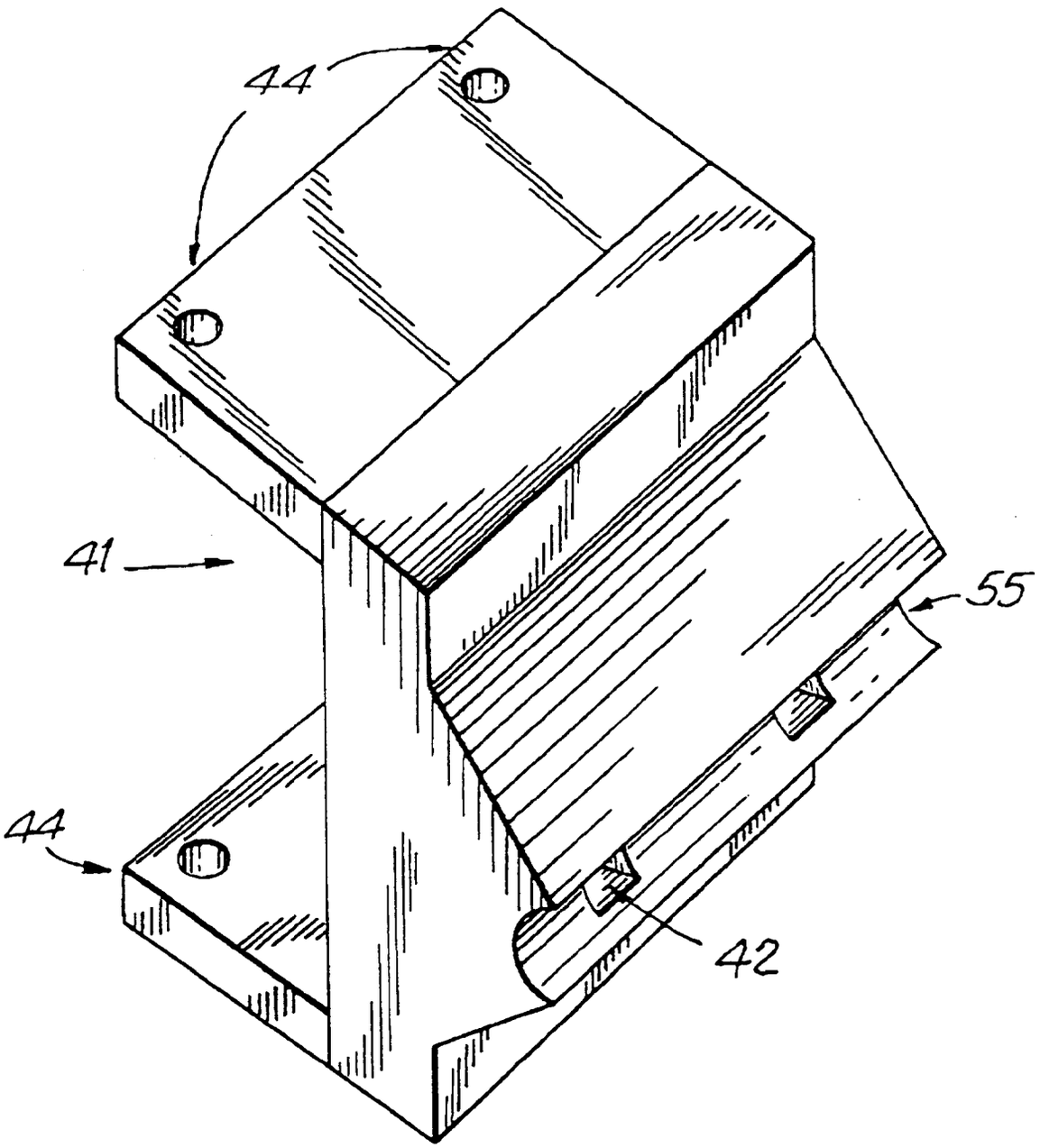

FIG. 18