Dec. 11, 1951 A. DE VRIES ET AL 2,577,953

SASH BALANCING MECHANISM

Filed Nov. 29, 1946

FIG.1.

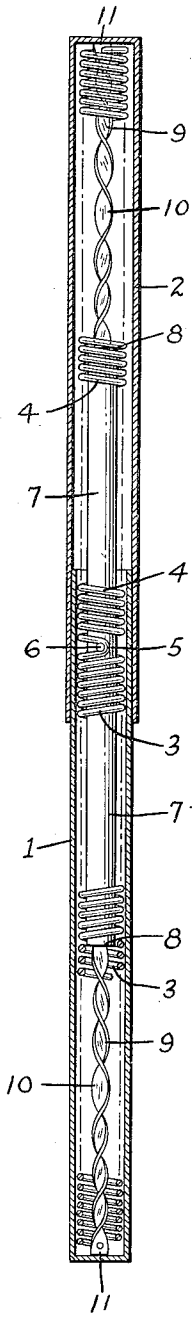

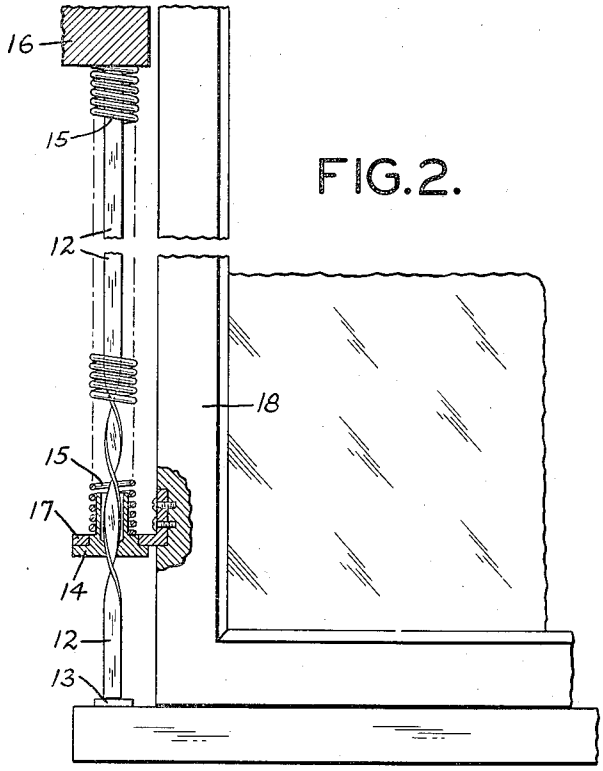

FIG.2.

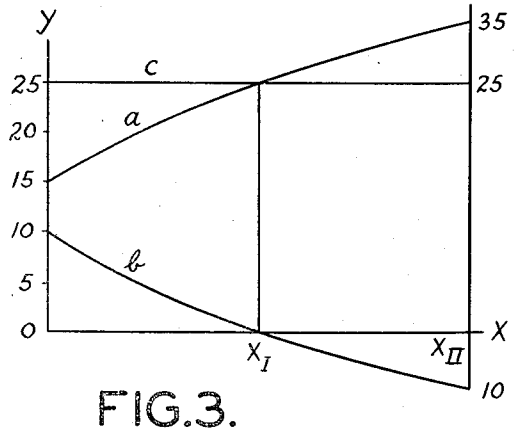

FIG.3.

INVENTORS.

ABRAHAM DE VRIES

LOUIS DE VRIES

BY

Wenderoth, Lind & Ponack

THEIR ATTORNEYS.

Patented Dec. 11, 1951

2,577,953

UNITED STATES PATENT OFFICE

2,577,953

SASH BALANCING MECHANISM

Abraham de Vries and Louis de Vries,
Amsterdam, Netherlands

Application November 29, 1946, Serial No. 713,028

8 Claims. (Cl. 16—197)

1

The present invention relates to an improvement in an extensible spring balance that is particularly useful for balancing window sash.

It has been known for some time to balance window sash and the like with spring balances instead of the earlier sash cord and weight. Spring balances of this type generally include a spiral strip member having a gradually increasing pitch that is enclosed by a pair of coil springs, one of the springs acting as a torsion spring which exerts its reactive force on the spiral strip, and the other acting as a tension or compression spring that is extended or compressed as the sash is raised or lowered.

Although spring balances of this type have been constructed wherein the net effective force exerted by the balance remains substantially constant in all positions, the amount of space made available in window frames for the reception of sash balances is so small as to require a selection of springs that are incapable of balancing heavier sash.

It has now been found that it is possible to simplify the construction and increase the load capacity of an extensible spring balance by utilizing one spring which acts simultaneously as an extensible spring, i. e., as a tension or compression spring, and as a torsion spring. The capacity of the spring balance of this invention can be further increased, of course, by employing a plurality of springs, each of which is simultaneously extensible and capable of exerting a torsional force on one or more spiral members.

One advantage of the present invention, therefore, is that it greatly simplifies the construction of spring balances by eliminating one of the two springs hitherto deemed to be necessary.

This and other advantages, as well as the principles of the present invention will become more apparent from the following detailed description made with reference to the accompanying drawing, it being understood however, that the invention is not limited to either the specific embodiments illustrated or to the application thereof to the balancing of window sash.

In the drawing:

Figure 1 is a view in sectional elevation of one embodiment of the extensible spring balance of this invention;

Figure 2 is a view in partial sectional elevation of another embodiment of the spring balance of this invention; and

Figure 3 is a graphic representation of the forces exerted by and within the spring balance illustrated in Figure 1 while it is being extended

2

from its fully contracted position to its fully extended position.

The embodiment illustrated by way of example in Figure 1 includes a pair of telescoping tube members 1 and 2 containing two halves 3 and 4 of a coil spring, said halves merging at point 5 where they are connected to a tube member 7 by means of a pin 6. The tube member 7 is slotted at both ends 8 to receive two spiral members 9, the twists of which reverse at points 10 and which are connected with the spring at ends 11.

The operation of the spring balance illustrated in Figure 1 in counterbalancing window sash will now be explained with reference to Figure 3 of the drawing wherein the ordinate axis $o—y$ indicates force in kilograms exerted in an upwardly direction, the abscissa $o—x$ represents the amount of movement of the sash in a downwardly direction, the positively sloping line a represents the upward reaction force exerted by the compression of the halves 3 and 4 of the spring, the negatively sloping line b represents the vertical component of the reaction force exerted by the halves 3 and 4 on the spiral strips 9 and the line c represents the weight of the window sash to be balanced.

Assuming, for the purpose of illustration, that the window sash weighs 25 kilograms, that it is attached to the upper end of the telescoping tube member 2 and the lower end of the tube member 1 is attached to the window frame, the halves 3 and 4 of the spring may be biased to exert an upward reaction force of 15 kilograms and to exert a torque or rotational force on the tube member 7, i. e., they tend to unwind in a clockwise direction when viewed from above, so that the vertical components of the forces exerted on the spiral strip members 9 in a direction to resist compression or telescoping of the balance will be 10 kilograms. The total force exerted by the balance is, therefore, 25 kilograms in a direction tending to resist compression thereof and thus effectively counterbalancing the weight of the window sash.

As the sash is lowered toward its half-way position, represented in Figure 3 by X_1, the compressive force exerted by the spring increases until it becomes 25 kilograms at X_1. At the same time, the tube member 7 rotates to wind up the spring but, due to the increase in the pitch of the spiral members 9 as the slots in the ends 8 of the tube member approach points 10, the vertical components of forces on the spiral strips tending to extend or resist compression of the spring balance decrease until they become zero

at X_1, i. e., when the slots engage the spiral strips at points 10. Here again the total effective force exerted by the balance is, therefore, 25 kilograms.

When the window sash is further lowered, the reaction force due to compression of the spring increases to a maximum of 35 kilograms. At the same time, the vertical components of the reaction forces exerted by the spring on the spiral strips 9 due to the reversal of direction and decrease in the pitch of the spirals increases to −10 kilograms, i. e., the torsional forces on the spirals tend to contract or telescope the spring balance with a force of 10 kilograms. As a result, the net effective force exerted by the spring balance on the window sash remains at 25 kilograms.

The embodiment illustrated by way of example in Figure 2 includes a spiral strip 12 fastened to the window frame at 13 and 16, a slotted member 14 in the form of a nipple that engages the convolutions of the strip and is secured to one end of a coil spring 15, the other end of said spring being fixed against movement either directly to the frame or to the spiral strip at 16. A projection 17 fastened to the window sash at 8 rotatably engages the slotted member 14.

In operation, the spring 15 is compressed and unwound as the window sash is raised and stretched and wound up as the window sash is lowered.

In a typical example, the spring 15 may be biased to exert, when the window sash at 8 is in its uppermost position, an upward force of 15 kilograms. The vertical component of the torque exerted on the slotted member 14 by the spring 15 is 10 kilograms due to the low pitch at the upper operative end of the spiral member 12. As the sash is lowered, the spring 15 is simultaneously stretched and wound up. The upward force on the slotted member 14 due to the tension of the spring 15 will increase at a certain rate. At the same time, the vertical component of the torque exerted on the slotted member 14 by the spring and acting on the spiral member 12 will, due to the increase in the pitch of the spiral, decrease at the same rate. Thus the net resultant upward force at all times remains equal.

It is to be understood that innumerable changes and modifications such as will readily occur to those skilled in the art upon reading the description may be made without departing from the principles of the present invention. Thus, for example, only half the spring illustrated in Figure 1 need be used. In this event, the tube 7 would be secured rotatably relative to the spiral member. All such changes and modifications are intended to be included within the scope of the invention as defined in the following claims.

We claim:

1. An extensible spring balance comprising a spiral member, a slotted member in engagement with said spiral member for rotation and longitudinal movement relative to said spiral member, and an extensible coil spring surrounding said spiral member, said spiral member and said coil spring being secured at one end against rotation and longitudinal movement relative to one another at said end and said coil spring being secured at a point remote from said secured end to said slotted member to exert simultaneously an axial force and a rotative force thereon.

2. An extensible spring balance comprising a reversely twisted spiral member, a slotted member in engagement with said spiral member for rotation and longitudinal movement relative to said spiral member, and an extensible coil spring surrounding said spiral member, said spiral member and said coil spring being secured at one end against rotation and longitudinal movement relative to one another at said end and said coil spring being secured at a point remote from said secured end to said slotted member to exert simultaneously an axial force and a rotative force thereon.

3. An extensible spring balance comprising a pair of telescoping tube members, an extensible coil spring within said telescoping tube members, said spring comprising two oppositely wound halves, a pair of spiral members within said coil spring, one end of one of said spiral members being fixed to one end of said coil spring and one end of the other of said spiral members being fixed to the other end of said coil spring, and a slotted tube member having a slot at each end thereof for engagement with said spiral members, said slotted tube member being secured to the midpoint of said spring, said spring and said spiral members cooperating to exert a substantially uniform force tending selectively to expand and contract the combined length of the telescoping tube members.

4. An extensible spring balance comprising a pair of telescoping tube members, an extensible coil spring within said telescoping tube members, said spring comprising two oppositely wound halves, a pair of reversely twisted spiral members within said coil spring, one end of one of said spiral members being fixed to one end of said coil spring and one end of the other of said spiral members being fixed to the other end of said coil spring, and a slotted tube member having a slot at each end thereof for engagement with said spiral members, said slotted tube member being secured to the midpoint of said spring, said spring and said spiral members cooperating to exert a substantially uniform force tending selectively to expand and contract the combined length of the telescoping tube members.

5. An extensible spring balance comprising a spiral member having a unidirectional twist at one end thereof, a slotted member in engagement with said spiral member for rotation and longitudinal movement relative to said spiral member, and an extensible coil spring having a first and second end and surrounding said spiral member, the first end of said coil spring being secured to the end of said spiral member remote from the twisted end thereof against rotation and longitudinal movement of said spiral member and spring relative to one another at said first end and the second end of said coil spring being secured to said slotted member to exert simultaneously an axial force and a rotative force thereon.

6. A sash balance for a window comprising a spiral member having a unidirectional twist at one end thereof and securable at one end to a window frame against movement relative thereto, a slotted member in engagement with said spiral member for rotation and longitudinal movement relative to said spiral member, said slotted member being adapted to be carried by the sash for rotational movement only relative thereto, and an extensible coil spring having a first and second end and surrounding said spiral member, the first end of said coil spring being secured against rotational and longitudinal movement adjacent the end of said spiral member remote from the twisted end thereof and the

second end of said coil spring being secured to the slotted member for rotational movement only relative to the sash and rotational and longitudinal movement relative to the spiral member.

7. A sash balance for a window comprising a spiral member having a unidirectional twist at one end thereof, the other end being flat, said spiral member being securable at at least one of said ends to a window frame against movement relative thereto, a slotted member in engagement with the twisted portion of the spiral member for rotation and longitudinal movement relative to the spiral member, said slotted member being adapted to be carried by the sash for rotational movement only relative thereto, and an extensible coil spring having a first and second end surrounding said spiral member, the first end of said coil spring being secured against rotational and longitudinal movement adjacent and relative to the flat end of the spiral member and the second end of the coil spring being secured to the slotted member for rotational movement only relative to the sash and rotational and longitudinal movement relative to the spiral member.

8. An extensible spring balance comprising a spiral member, a slotted member in engagement with said spiral member, an extensible coil spring surrounding said spiral member, one end of said coil spring being immovably secured to the spiral member and the other end of the coil spring being secured, at a point remote from said secured end, to said slotted member to exert simultaneously an axial force and a rotative force thereon.

ABRAHAM DE VRIES.
LOUIS DE VRIES.

REFERENCES CITED

The following references are of record in the file of this patent:

UNITED STATES PATENTS

Number	Name	Date
2,041,646	Larson	May 19, 1936