(No Model.) 2 Sheets—Sheet 1.

A. J. NELLIS.

HARROW.

No. 456,426. Patented July 21, 1891.

Fig. 1.

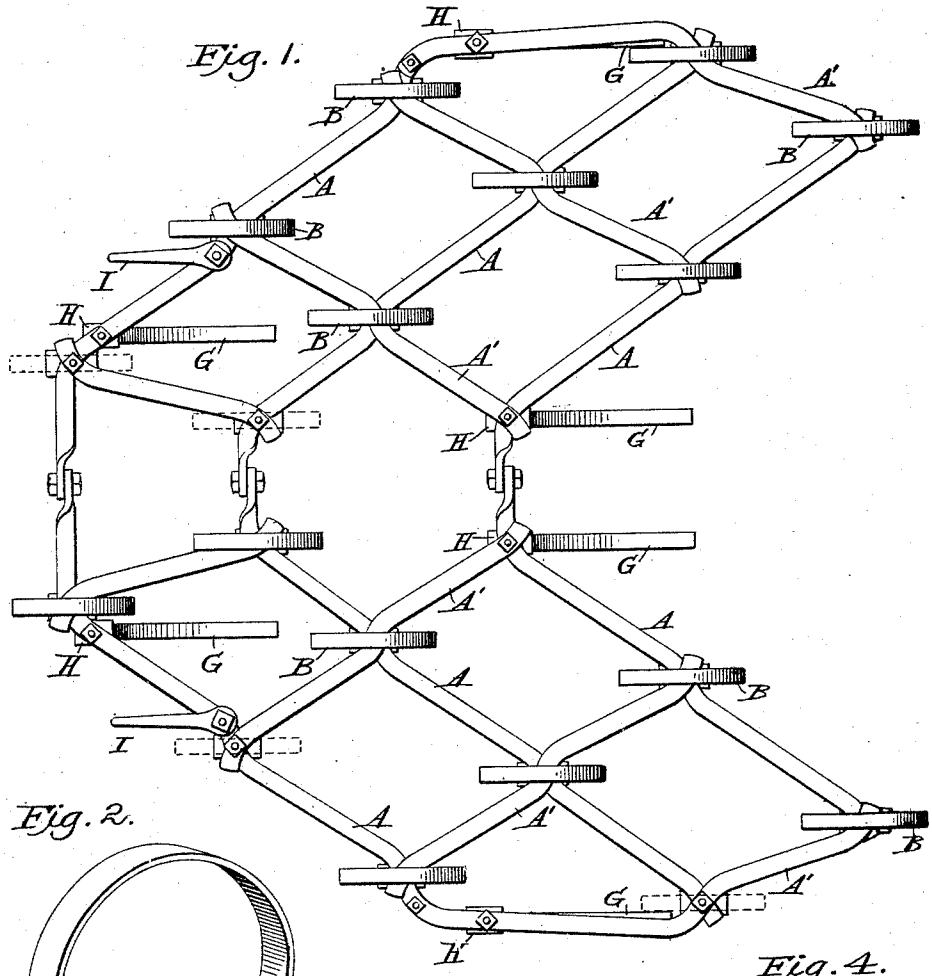

Fig. 2.

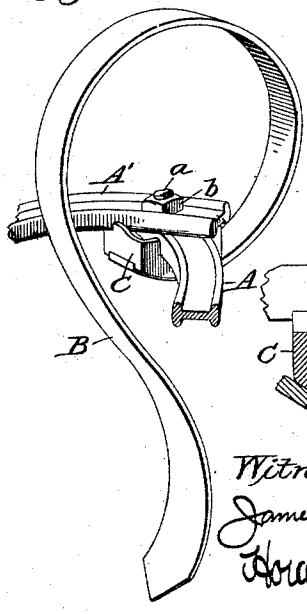

Fig. 3.

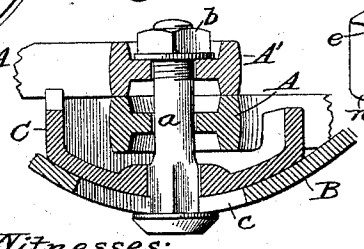

Fig. 4.

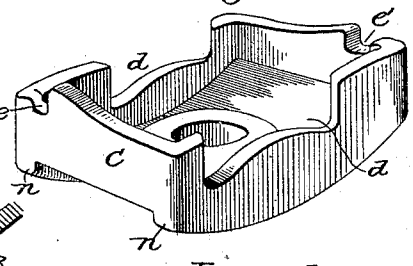

Witnesses:
James F. Duhamel
Horace A. Dodge.

Inventor:
A. J. Nellis.
By Dodger & Sons
Attys

THE NORRIS PETERS CO., PHOTO-LITHO., WASHINGTON, D. C.

(No Model.) 2 Sheets—Sheet 2.

A. J. NELLIS.

HARROW.

No. 456,426. Patented July 21, 1891.

Fig. 5.

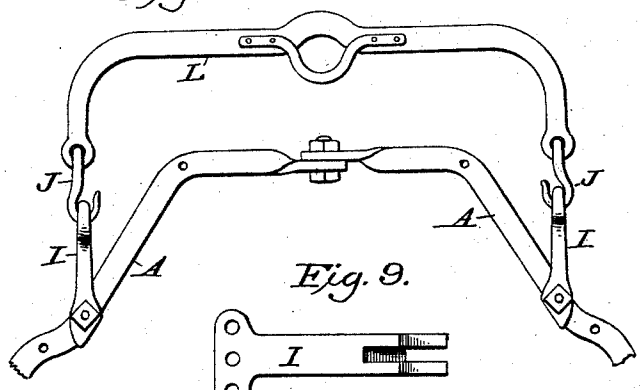

Fig. 9.

Fig. 7.

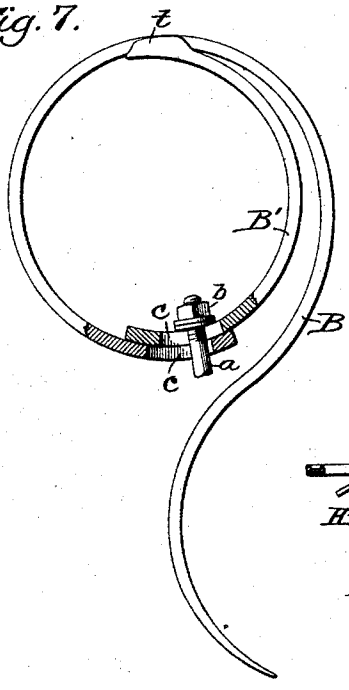

Fig. 6.

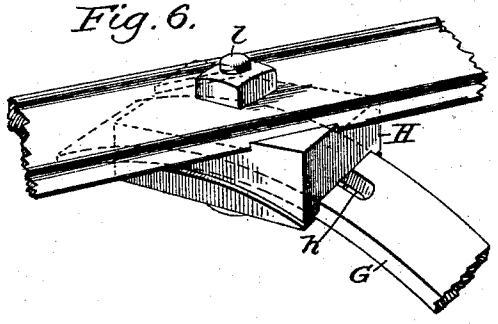

Fig. 8.

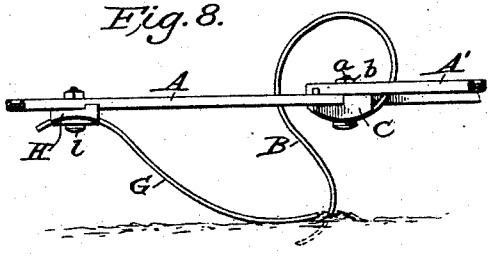

Witnesses:
James F. Duhamel
Horace A. Dodge.

Inventor:
A. J. Nellis.
by Dodger & Sons
Attys.

THE NORRIS PETERS CO., PHOTO-LITHO., WASHINGTON, D. C.

UNITED STATES PATENT OFFICE.

AARON J. NELLIS, OF PITTSBURG, PENNSYLVANIA.

HARROW.

SPECIFICATION forming part of Letters Patent No. 456,426, dated July 21, 1891.

Application filed August 27, 1890. Serial No. 363,174. (No model.)

To all whom it may concern:

Be it known that I, AARON J. NELLIS, a citizen of the United States, residing at Pittsburg, in the county of Allegheny and State of Pennsylvania, have invented certain new and useful Improvements in Harrows, of which the following is a specification.

My invention relates to harrows of that class which are denominated "spring-tooth harrows;" and the invention consists in certain improvements in the construction of the frame, the teeth, and means for securing and adjusting the same, and in spring-adjustable bearers for gaging the depth, together with other details, all as hereinafter more fully set forth.

Figure 1 is a top plan view of the harrow. Figs. 2, 3, 4, 5, and 6 represent details of construction; and Fig. 7 is a side elevation of a tooth with an adjustable spring-brace. Figs. 8 and 9 are details in the construction of the runner and clevis.

Spring-tooth harrows have of late come into extensive use. The object of my present invention is to simplify their construction and at the same time produce an implement that will produce better results and the action of which upon the soil can be more effectually controlled or regulated.

To construct the frame, I use double-T-channel steel bars, the form of which is clearly shown in Fig. 2, the object being to secure rigidity and the requisite strength without undue weight. As shown in Fig. 1, the harrow is made of two parts hinged together at the center, as is customary, and each of these frames is composed of two sets of these bars, one set A being arranged longitudinally and the other set A′ being arranged crosswise of the former at nearly a right angle, as shown in Fig. 1. At the points where the bars A and A′ cross each other I prefer to have them bent to form lateral offsets, as shown, simply to form a wider space for the tooth to play back and forth in; but it is obvious that this may be omitted and straight bars be used instead. These bars are each provided with a hole at their point of intersection for the reception of a bolt *a*, as shown more clearly in Fig. 3, this bolt serving not only to fasten the bars, but also to hold the tooth B and its bearing-block C, which latter also serves to lock the bars A and A′ against lateral movement of one upon the other, thereby rendering the frame very rigid. In putting the frame together the bars A and A′ are placed one upon the other without cutting notches or recesses in them, their edge flanges simply coming in contact, as shown in Figs. 2 and 3. In order to lock them securely in position, and at the same time provide a means for holding and adjusting the teeth, I provide a metal block *c*, the form of which is shown in Fig. 4. As there shown, the under face of this block is curved to correspond with the curvature of the tooth at the point of its attachment, so that the tooth will have a good fair bearing on the entire face of the block; and it is provided at each side with a depending rib or flange *n* which serves to prevent the tooth from being moved or thrown around laterally, the tooth being made of a width just equal to the space between the flanges *n n*. On its upper surface this block, which is recessed or made cup-shaped to avoid unnecessary weight and use of metal, is provided with notches or recesses *d*, formed in its walls on opposite sides, corresponding in width to the width of the under bar which fits therein, while its other two walls are each provided with a notch *e*, as clearly shown in Fig. 4, these notches *e* being located at the corners diagonally opposite each other, so that the flanges on the under face of the upper bar will rest therein, as shown in Figs. 2 and 3. A hole is also made through the center of the block for the reception of a bolt *a*, as shown. It will be seen, as shown in Figs. 2 and 3, that these blocks are placed on the under side of the bars where they cross each other, for the reason that in this case I use a tooth of peculiar form, (described hereinafter,) and which I prefer to fasten on the under side. It is, however, obvious that the block may be placed on the upper side of the bars and the same form of tooth be used; but in that case the face against which the tooth is clamped will be made concave instead of convex. So, too, this block may be used with the ordinary form of spring-tooth, the block being placed above or below, as may be preferred, it only being necessary to make the face of the block on which the tooth bears conform in curvature to that of the tooth at its bearing end.

While I prefer to make the frame of double channel or flanged bars, for the reasons above stated, it is obvious that this style of block may be used with bars of other forms, it only being necessary to modify the recesses or notches in the block to adapt them to the form of the bars used, whatever that may be, and which any skilled pattern-maker can readily do. If, for instance, it be desired to use plain flat bars for the frame, then, instead of the notches *e* and *e'*, recesses of the full width of the bar will be made, similar to the recesses *d* on the other sides of the block, one set of these recesses being made deeper than the others, so that the lower bar will rest in the deeper ones low enough to permit the upper bar to rest in the more shallow recesses at the opposite sides of the block, the projecting shoulders of the block at the sides of each recess bearing against the edges of the two bars, and thus locking them against any swinging or turning movement of one upon the other, the same as when the flanged bars are used. As a general rule, these spring-teeth for harrows have heretofore been made with a curvature in one direction only—that is, in the arc of a circle or of an oval—and they are usually so attached to the frame that their points scrape rather than cut into the soil, and when they strike a hard spot or catch on a root, stone, or similar obstruction the force applied tends to straighten them out, their point being held back until the harrow has moved some five to seven inches before they will let go, the distance depending upon the curvature of the tooth and the position of its point in relation to its point of attachment to the frame, their free end or point usually being some inches in rear of their point of attachment.

By experiment I have found that better results are obtained by using teeth made with reversed curves, as shown in Figs. 2 and 7. When this form of tooth is used, it will be seen that when the tooth strikes an obstruction the force applied tends to wind up the upper curve, which forms an entire circle, or nearly so, and as the free end is arranged to stand at a vertical point directly under the point of attachment, or nearly so, it is much sooner released from the obstruction. By curving the extreme point well forward, so that it will enter the soil at a more acute angle, it cuts into the soil more like the point of a plow, thereby causing the earth to slide up on the point and roll over, whereby the soil is more effectually turned over and worked than when the teeth are set to have a scraping action. This is a desirable result in any case, but is of special value in those cases where wheat or rye is sown after the removal of a crop of corn and without plowing or other preparation of the soil, as it more effectually cuts up and destroys the weeds, prepares a better seed-bed for the grain sown, and covers the grain more evenly and effectually. With a tooth made in the form shown it is more convenient, in order to bring its cutting-point to the desired position, to secure its opposite end to the under side of the bars or frame, as shown in Fig. 2, the circular portion extending from behind up over the bars and then down in front, as shown in Figs. 1 and 2, the offsets or lateral bends in the bars affording a free space for all the to-and-fro movement of the tooth required.

In order to enable the teeth to be adjusted so as to give more or less inclination to their cutting-points, they are each provided with a slot *c* at their end where fastened to the block B, so that by merely loosening the nut *b* they can be adjusted to any extent desired.

In order to give additional support to the tooth and at the same time adjust or vary its tension to adapt it to different conditions of the soil, I have devised an additional spring brace or support B', as shown in Fig. 7. This consists of a piece of flat spring-steel similar to that of the teeth, having its lower end provided with a slot *c*, the same as the tooth, and its opposite end being provided with a lip *t* at each side, arranged to project at the sides of the tooth, as shown in Fig. 7, this spring being curved, as shown, so that its free end will bear against the inner face of the tooth at or near the top of its circular bend, as shown in Fig. 7. The same bolt that holds the tooth will also hold the spring B, and by loosening the nut *b* this spring may be adjusted so that its free end will bear against the tooth nearer to or farther from the point where the tooth is fastened to the frame, and thus the tooth can be made to have more or less spring or elasticity, as may be desired, thereby adapting the harrow to all varieties or conditions of soil.

It will be seen that by this construction a single ordinary bolt is made to secure the bars of the frame at the joint, the locking and bearing block, and the tooth, and in case the additional spring be used it also, and that the block C serves not only to lock the bars of the frame, but also to form a seat for the tooth and to hold it against lateral misplacement, thus reducing to the minimum the number of pieces used, while rendering the frame exceedingly rigid and holding the teeth secure. It will further be seen that to adjust the tooth or the spring-brace, or both, it is not necessary to remove the bolt or any part whatever, but simply to loosen the nut, adjust the parts as desired, and then tighten the nut, thus saving time and labor.

In order to regulate the depth to which the teeth shall penetrate the soil, I provide the harrow with a series of spring-bearers or gage-teeth G, as shown in Figs. 1 and 6. These, like the teeth proper, are made of flat steel bars, and are secured to the under side of the frame by means of a bearing-block H and a bolt *l*, as shown in Fig. 6. This bearing-block H, like that for the teeth, has its under face curved, but in a reverse manner, it being concave, while the others are convex. It is also

provided with the depending ribs *n*, and the bearing or gage tooth G has its end curved to correspond, and is provided with a slot *h*, so that by loosening the nut of bolt *l* this gage-tooth can be adjusted to any position desired. From four to six of these are secured to the harrow at suitable points, six such being shown in Fig. 1, three to each half of the harrow. These gage-teeth or bearers, being curved backward, as represented in Fig. 8, operate in the same manner as sled-runners, they bearing on the surface and thus gaging the depth to which the cultivating-teeth shall enter the soil. Another advantage of these bearers or gage-teeth is that they tend to press and hold down the loose trash, weeds, &c., that may be upon the ground, and as the teeth are pressed backward allow them to pass over it instead of gathering it up in large masses and dragging it along over the field, and which when it rolls up in large masses frequently raises the harrow from the ground and prevents the teeth from entering the soil. This feature of gaging the depth is specially valuable where, as is now becoming the custom, it is desired to have what is termed a "shallow" or "surface" cultivation of corn or similar crops, as by its means the teeth can be adjusted to run with uniformity at any depth desired, so as simply to cultivate or stir the surface soil without penetrating deep enough to injure the roots of the growing plants.

In order to have the harrow work or draw evenly, I secure to each half a clevis I, which, instead of being pivoted so as to play loosely on the frame, as is usual, is rigidly secured to the frame, it being made with a solid shank with lips at its rear end to fit upon the upper and lower sides of the bar, the front face of the opening between the lips being beveled or inclined to correspond with the inclination of the bar, so that when bolted thereto it has no lateral movement. The same result could of course be produced by changing the form of the lips so as to use two bolts instead of one; but as this clevis is cast complete this plan is preferred, as it saves the use of the additional bolts and the making of the holes for the same. I then provide a draw-bar L, of the form shown in Fig. 5, its ends being bent backward, as shown, and connected to the front ends of the clevises by a hook J. By this arrangement I have but one loose joint at each end, and that about midway between the body of the draft-bar and the frame, instead of two loose joints, as is customary, one at the end of the draft-bar and another at the point where the clevis or draft-rod is attached to the frame. By this arrangement the harrow is much less apt to be deflected or moved sidewise when the teeth on one side strike a hard spot or an obstruction, the loose joint between the draft-bar and the frame being sufficient to permit either part of the harrow to rise or fall and adapt itself to inequalities of the surface, as usual.

By these several improvements I am enabled to produce a very superior implement that is simple and cheap to construct, consisting of the fewest possible number of parts, and that is capable of every desired adjustment without the removal of any piece and with the least amount of time and labor.

I do not in this application make a broad claim to the frame composed of bars provided with lateral offsets, as that forms the subject-matter of a separate application filed February 7, 1891.

I am aware that it is common to make harrow-frames of metal bars and to lock said bars together by means of blocks and clips of various forms; that it is also common to use metal blocks of various styles as a seat for the spring-teeth, and that it is not new to use spring-bearers or gage-teeth, and therefore I do not claim any of these features, broadly; but I am not aware that any one has ever before devised or described a harrow having the special construction or features embodied in mine; and therefore

What I claim as new and of my invention is—

1. The flanged metallic block C, having two of its flanges on opposite sides provided with recesses to embrace one of the bars and the flanges on its other sides provided with notches for holding the other bar of the frame and having its under face provided with a curved surface, with side ribs for holding and adjusting the tooth, and a central hole for the reception of a fastening-bolt, substantially as shown and described.

2. The combination, in a harrow, of the bars crossing each other, with the bar-locking and tooth-bearing block C, constructed substantially as described, whereby they are adapted to be secured rigidly in place and form a seat for the attachment and adjustment of a curved spring-tooth by the use of a single bolt and nut, as set forth.

3. The combination, in a harrow, of a frame composed of the crossed metal bars, the block C, constructed substantially as described, the recurved spring-tooth provided with a slot, and bolt *a*, with its nut *b*, all arranged substantially as and for the purpose set forth.

4. The combination, in a harrow, of the recurved spring-tooth B, held rigidly in its seat, and the spring-brace B′, both being provided with a slot whereby they can both be held in place by the single bolt and either or both can be adjusted by loosening a single nut, substantially as shown and described.

5. The combination of the recurved spring-tooth B, provided with a slot, and the curved spring-brace B′, provided with a slot, the two being arranged in relation to each other, as shown, whereby both can be held in position and can also be adjusted by means of a single bolt, as set forth.

6. In combination with a harrow, the recurved slotted bearer G, secured to the frame

by means of a block H, having a correspondingly-curved seat, and a bolt *l*, the said parts being constructed and arranged to operate as set forth, whereby the bearer can be adjusted by merely loosening the nut on the bolt and sliding the bearer forward or back, as set forth.

In witness whereof I hereunto set my hand in the presence of two witnesses.

AARON J. NELLIS.

Witnesses:
HORACE A. DODGE,
JAMES F. DUHAMEL.