(12) INTERNATIONAL APPLICATION PUBLISHED UNDER THE PATENT COOPERATION TREATY (PCT)

(19) World Intellectual Property Organization
International Bureau

(43) International Publication Date
13 November 2014 (13.11.2014)

WIPO | PCT

(10) International Publication Number
WO 2014/182307 Al

(51) International Patent Classification:
F16C 19/18 (2006.01) *F16C 33/37* (2006.01)
F16C 19/20 (2006.01)

(21) International Application Number:
PCT/US20 13/040488

(22) International Filing Date:
10 May 2013 (10.05.2013)

(25) Filing Language: English

(26) Publication Language: English

(71) Applicant: **ROLLER BEARING COMPANY OF AMERICA, INC.** [US/US]; One Tribology Center, Oxford, Connecticut 06478 (US).

(72) Inventors; and
(71) Applicants : **HABIBVAND, Alex** [US/US]; 3012 Echo Hill Way, Orange, California 92867 (US). **SINGHAL, Deepak** [US/US]; 7961 Poinsettia Drive, Buena Park, California 90620 (US).

(74) Agents: **MUTCHLER, John, M.** et al; Michaud-Kinney Group LLP, 306 Industrial Park Road, Suite 206, Middletown, Connecticut 06457 (US).

(81) Designated States *(unless otherwise indicated, for every kind of national protection available):* AE, AG, AL, AM, AO, AT, AU, AZ, BA, BB, BG, BH, BN, BR, BW, BY, BZ, CA, CH, CL, CN, CO, CR, CU, CZ, DE, DK, DM, DO, DZ, EC, EE, EG, ES, FI, GB, GD, GE, GH, GM, GT, HN, HR, HU, ID, IL, IN, IS, JP, KE, KG, KM, KN, KP, KR, KZ, LA, LC, LK, LR, LS, LT, LU, LY, MA, MD, ME, MG, MK, MN, MW, MX, MY, MZ, NA, NG, NI, NO, NZ, OM, PA, PE, PG, PH, PL, PT, QA, RO, RS, RU, RW, SC, SD, SE, SG, SK, SL, SM, ST, SV, SY, TH, TJ, TM, TN, TR, TT, TZ, UA, UG, US, UZ, VC, VN, ZA, ZM, ZW.

(84) Designated States *(unless otherwise indicated, for every kind of regional protection available):* ARIPO (BW, GH, GM, KE, LR, LS, MW, MZ, NA, RW, SD, SL, SZ, TZ, UG, ZM, ZW), Eurasian (AM, AZ, BY, KG, KZ, RU, TJ, TM), European (AL, AT, BE, BG, CH, CY, CZ, DE, DK, EE, ES, FI, FR, GB, GR, HR, HU, IE, IS, IT, LT, LU, LV,

[Continued on nextpage]

WO 2014/182307 A1

(54) Title: DOUBLE ROW PRELOADED BALL BEARING WITH SPACER BALLS

FIG. 1

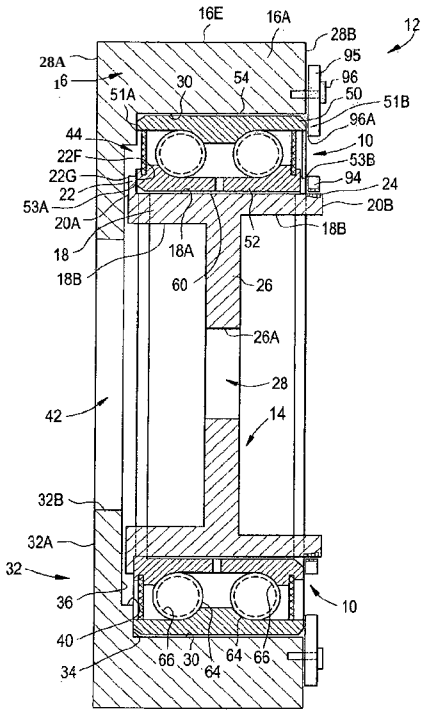

(57) Abstract: A ball bearing includes an outer ring (50) having two outer raceways and an inner ring (52) having two inner raceways. A plurality of balls is disposed in each of the two inner and outer raceways. The plurality of balls include load bearing balls (64) and spacer balls (66). The spacer balls (66) are disposed between the load bearing balls (64). Each of the load bearing balls (64) has a single point of contact with each of the two inner and outer raceways. The load bearing balls (64) are preloaded between the outer ring (50) and the inner ring (52) at predetermined force.

MC, MK, MT, NL, NO, PL, PT, RO, RS, SE, SI, SK, SM, TR), OAPI (BF, BJ, CF, CG, CI, CM, GA, GN, GQ, GW, ML, MR, NE, SN, TD, TG).

Published:

— *with international search report (Art. 21(3))*

DOUBLE ROW PRELOADED BALL BEARING WITH SPACER BALLS

FIELD OF THE INVENTION

[0001] The present invention is generally directed to a double row ball bearing and is more specifically directed to a preloaded double row ball bearing having spacer balls.

BACKGROUND OF THE INVENTION

[0002] Many types of bearings can be used to support radial, thrust, or combination radial and thrust loads. Such bearings include ball, roller, plain, journal and tapered roller bearings. Typically, rolling bearings include an outer ring having a generally cylindrical exterior surface and a generally cylindrical inner surface defining an interior area of the outer ring. An inner ring having a generally cylindrical outside surface is disposed in the interior area of the outer ring. A plurality of rolling elements, such as balls or needle rollers are disposed in a cavity between the outside surface of the inner ring and the inner surface of the outer ring.

[0003] The outer ring and/or the inner ring can rotate relative to one another. For example, the inner ring may be secured to a shaft and the outer ring can rotate relative to the inner ring and the shaft. During rotation of the outer ring and/or the inner ring relative to one another, the bearing may be subject to cyclic loads that could cause fatigue failure of the bearing. Fatigue life of bearings can be represented as a "L10" life. This is the life at which ten percent of the bearings in that application can be expected to have failed due to classical fatigue failure or, alternatively, the life at which ninety percent will still be operating. The L10 life of the bearing is the theoretical life.

[0004] Some bearings are subject to high load rates and/or high rotational accelerations rotations that could cause the rolling elements to slip, skid and/or cause backlash of the rolling elements in the outer ring and/or the inner ring. Such slippage, skidding and backlash could degrade bearing performance and result in premature failure of the bearing.

SUMMARY OF THE INVENTION

[0005] According to an aspect of the present invention, there is provided a ball bearing, including an outer ring having at a first outer raceway and a second outer raceway each being defined by a portion of a radially inward facing surface of the outer ring; and an inner ring disposed within the outer ring and having a first inner raceway and a second inner raceway each being defined by a radially outward facing surface of the inner ring. The ball bearing

includes a first plurality of balls disposed partially in the first inner raceway and first outer raceway; and a second plurality of balls disposed partially in the second inner raceway and second outer raceway. The first plurality of balls and the second plurality of balls each include load bearing balls and spacer balls. The spacer balls are disposed between the load bearing balls. Each of the load bearing balls of the first plurality of balls has a first single point of contact with the first outer raceway and second single point of contact with the first inner raceway. The first single point of contact and the second single point of contact define a first line of contact. Each of the load bearing balls of the second plurality of balls has a third single point of contact with the second outer raceway and fourth single point of contact with the second inner raceway. The third single point of contact and the fourth single point of contact defining a second line of contact. The first line of contact and the second line of contact have a point of intersection a point radially away from the outer ring, thereby defining a back-to-back configuration of the first outer raceway and the second outer raceway in the outer ring. The load bearing balls are preloaded between the outer ring and the inner ring at predetermined force.

DESCRIPTION OF THE DRAWINGS

[0006] FIG. 1 is a cross sectional view of the roller bearing in accordance with an embodiment of the present invention, installed in a housing;

[0007] FIG. 2 is an enlarged view of a portion of the roller bearing of FIG. 1;

[0008] FIG. 3 is an enlarged side view of a portion of the roller bearing of FIG. 1; and

[0009] FIG. 4 is an enlarged view of the portion of the roller bearing of FIG. 2.

DETAILED DESCRIPTION

[0010] As shown in FIG. 1 a ball bearing cartridge, generally designated by the reference numeral 10, is installed in a housing assembly 12. The housing assembly 12 includes an inner member 14 and an outer member 16 positioned around the inner member, with the ball bearing cartridge 10 positioned therebetween. The ball bearing cartridge 10 is a preloaded double row bearing, as described in detail below. The ball bearing cartridge 10 includes an outer ring 50 surrounding an inner ring 52 and having a plurality of load bearing balls 64 and spacer balls 66 disposed therebetween, as shown in FIG. 3 and described further below. While the ball cartridge bearing 10 is shown and described as being a double row bearing, the present invention is not limited in this regard as three or more rows may be employed without departing from the broader aspects disclosed herein.

[0011] The inner member 14 has an annular outer flange 18 having a substantially cylindrical exterior surface 18A and a substantially cylindrical interior surface 18B, each extending between a first end 20A and a second end 20B of the flange. The exterior surface 18A has a lip 22 extending radially outward from a portion of the exterior surface 18A proximate the first end 20A. The lip 22 defines an axially facing abutment surface 22F and an axially facing outer surface 22G on opposing faces of the lip. A portion of the exterior surface 18A proximate the second end 20B has male threads 24 formed therein. The inner member 14 has a central web 26 which extends radially inward from the interior surface 18A of the flange 18. The web 26 terminates at a substantially annular interior surface 26A which defines a bore 28 extending through the web.

[0012] The outer member 16 includes an annular body 16A having an exterior surface 16E that extends between a first end 28A and a second end 28B of the annular body. The annular body 16A has an interior surface 30. The annular body 16A includes a radially inwardly projecting stepped flange 32 having an axially outward facing surface 32A on a first face of the stepped flange. A second face of the stepped flange 32, opposite the first face includes an axially facing abutment surface 34 proximate the interior surface 30. The second face of the stepped flange 32 includes an axially facing surface 36 positioned axially between the outward facing surface 32A and the abutment surface 34. The axially facing surface 36 extends radially inward from a shoulder 40 to a radially interior surface 32B of the stepped flange 32. The radially interior surface 32B defines a bore 42 that extends through the stepped flange 32.

[0013] The interior surface 30, the axially facing abutment surface 34, the axially facing abutment surface 22F and the cylindrical exterior surface 18A cooperate with one another to define a pocket 44 in which the ball bearing cartridge 10 is disposed, as described below.

[0014] Referring to FIGS. 2 and 4, the ball bearing cartridge 10 includes an outer ring 50 and an inner ring 52 disposed substantially concentrically within the outer ring. The outer ring 50 has a substantially cylindrical exterior surface 54 extending between a first axial end 51A and a second axial end 51B of the outer ring. The inner ring 52 has an inside surface 60 extending between a first end 53A and a second end 53B of the inner ring. The outer raceway 50A and the inner raceway 52A define a first annular cavity 62A therebetween. Similarly, the outer raceway 50B and the inner raceway 52B define a second annular cavity 62B therebetween. In one embodiment, the inner ring 50 and/or the outer ring 52 are manufactured from AMS-5630 type 440C stainless steel having a minimum Rockwell C scale

hardness of 58. While the inner ring 50 and/or the outer ring 52 are described as being manufactured from AMS-5630 type 440C stainless steel having a minimum Rockwell C scale hardness of 58, the present invention is not limited in this regard as other materials having other hardness values may be employed for manufacture of the inner ring 50 and/or the outer ring 52.

[0015] Referring back to FIG. 1, the ball bearing cartridge 10 is disposed in the pocket 44 with the first end 51A of the outer ring 50 engaging the axially facing abutment surface 34 and the first end 53A of the inner ring 52 engaging the axially facing abutment surface 22F. A nut 94 is threaded on the male threads 24 and an axial face of the nut engages the second end 53B of the inner ring 52 and secures the inner ring in the pocket. A retaining ring 96 is secured to the second end 28B of the annular body 16A by suitable fasteners 96 (e.g., bolts). An axially inward facing portion 96A of the retaining ring engages the second end 51B of the outer ring 50 to secure the outer ring 50 in the pocket 44.

[0016] As illustrated in FIGS. 2 and 4, the outer ring 50 has two outer raceways 50A and 50B, each defined by portions of a radially inward facing surface 56 of the outer ring, as described below. The radially inward facing surface 56 includes a first substantially cylindrical surface 56A proximate the first end 51A and having a radius R5 measured from a longitudinal axis C of the ball bearing cartridge 10. The radially inward facing surface 56 includes a second substantially cylindrical surface 56B proximate the second end 51B and having a radius R5 measured from a longitudinal axis C of the ball bearing cartridge 10. A central portion of the radially inward facing surface 56 is stepped radially inward from the surfaces 56A and 56B by a distance H1 and defines a lobe 50L. The lobe 50L defines a third substantially cylindrical and radially inward facing surface 81 having a radius R6 measured from the longitudinal axis C. The outer raceways 50A and 50B are mirror images of one another about a central plane Z and are positioned on opposite sides of the lobe 50L. The outer raceway 50A extends arcuately along a portion of the radially inward facing surface 56 between the first substantially cylindrical surface 56A and an edge of the third substantially cylindrical surface 81, as described further below. The outer raceway 50B extends arcuately along a portion of the radially inward facing surface 56 between the second substantially cylindrical surface 56B and another edge of the third substantially cylindrical surface 81, as described further below.

[0017] Still referring to FIGS. 2 and 4, the outer raceway 50A defines a first raceway surface 68A and second raceway surface 69A. The first raceway surface 68A has a radius of curvature R3 and extends across an arc defined by an angle a which extends from point 73A

to point 74A. The second raceway surface 69A has a radius of curvature R2, about equal to a radius of curvature R2 of the load bearing balls 64. The second raceway surface 69A extends across an arc defined by an angle β which extends from point 74A to point 76A. The radius of curvature R3 is greater than the radius of curvature R2. Each of the load bearing balls 64 has a single point of contact 75A with the second raceway surface 69A. The single point of contact 75A is positioned between the points 74A and 76A.

[0018] Referring to FIGS. 2 and 4, the outer raceway 50B defines a first raceway surface 68B and second raceway surface 69B. The first raceway surface 68B has a radius of curvature R3 and extends across an arc defined by an angle a which extends from point 73B to point 74B. The second raceway surface 69B has a radius of curvature R2, about equal to the radius of curvature R2 of the load bearing balls 64. The second raceway surface 69B extends across an arc defined by an angle β which extends from point 74B to point 76B. The radius of curvature R3 is greater than the radius of curvature R2. Each of the load bearing balls 64 has a single point of contact 75B with the second raceway surface 69B. The single point of contact 75B is positioned between the points 74B and 76B.

[0019] Referring to FIGS. 2 and 4, the inner ring 52 has an inside surface 60 extending between a first end 53A and a second end 53B of the inner ring. The inner ring 52 has a two inner raceways 52A and 52B each defined by portions of a radially outward facing surface 58 of the outer ring, as described below. The radially outward facing surface 58 includes a first substantially cylindrical surface 58A proximate the first end 53A and having a radius R7 measured from a longitudinal axis C. The radially outward facing surface 58 includes a second substantially cylindrical surface 58B proximate the second end 53B and having a radius R7 measured from a longitudinal axis C. A central portion of the radially outward facing surface 58 is stepped radially inward from the surfaces 58A and 58B by a distance H2 and defining a radially outward facing fourth cylindrical surface 82 having a radius R8 measured from the longitudinal axis C. The inner raceways 52A and 52B are mirror images of one another about the central plane Z and are positioned on opposite sides of the fourth cylindrical surface 82. The inner raceway 52A extends arcuately along a portion of the radially outward facing surface 58 between the first substantially cylindrical surface 58A and an edge of the fourth cylindrical surface 82, as described further below. The inner raceway 52B extends arcuately along a portion of the radially outwardly facing surface 58 between the second substantially cylindrical surface 58B and another edge of the fourth cylindrical surface 82, as described further below.

[0020] Still referring to FIGS. 2 and 4, the inner raceway 52A defines a first raceway surface 70A and second raceway surface 71A. The first raceway surface 70A has a radius of curvature R4 and extends across an arc defined by an angle a which extends from point 79A to point 80A. The second raceway surface 71A has a radius of curvature R2, about equal to a radius of curvature R2 of the load bearing balls 64. The second raceway surface 71A extends across an arc defined by an angle β which extends from point 77A to point 79A. The radius of curvature R4 is greater than the radius of curvature R2. Each of the load bearing balls 64 has a single point of contact 78A with the second raceway surface 71A. The single point of contact 78A is positioned between the points 77A and 79A.

[0021] Referring to FIGS. 2 and 4, the inner raceway 52B defines a first raceway surface 70B and second raceway surface 7IB. The first raceway surface 70B has a radius of curvature R4 and extends across an arc defined by an angle a which extends from point 79B to point 80B. The second raceway surface 7IB has a radius of curvature R2, about equal to a radius of curvature R2 of the load bearing balls 64. The second raceway surface 7IB extends across an arc defined by an angle β which extends from point 77B to point 79B. The radius of curvature R4 is greater than the radius of curvature R2. Each of the load bearing balls 64 has a single point of contact 78B with the second raceway surface 7IB. The single point of contact 78B is positioned between the points 77B and 79B.

[0022] The single point of contact 75A (between the load bearing balls 64 and the outer raceway 50A) and the single point of contact 78A (between the load bearing balls 64 and the inner raceway 52A) align along a reference line LI. The single point of contact 75B (between the load bearing balls 64 and the outer raceway 50B) and the single point of contact 78B (between the load bearing balls 64 and the inner raceway 52B) align along a reference line L2. The reference line LI defines a contact angle μï relative to a reference line Yl. The reference line L2 defines a contact angle μ2 relative to a reference line Y2. The reference line LI is skewed clockwise through the angle μï towards the reference line L2 and the reference line L2 is skewed counterclockwise through the angle μ2 towards the reference line LI, resulting in a back-to-back configuration of the reference lines LI and L2. Such a back-to-back configuration establishes maintains the preloads of the balls. In one embodiment the contact angle μï is about 30 degrees plus or minus 10%.

[0023] As illustrated in FIGS. 2 and 4, each of the load bearing balls 64 in the first annular cavity 62A has single point of contact 75A with the first outer raceway 50A and has the single point of contact 78A with the inner raceway 52A. The single point of contact 75A and the single point of contact 78A define the first line of contact LI. Each of the load

bearing balls 64 has the single point of contact 75B with the outer raceway 50B and has the single point of contact 78B with the inner raceway 52B. The single point of contact 75B and the single point of contact 78B define the second line of contact L2. The first line of contact L I and the second line of contact L2 have a point of intersection X a point radially away from the outer ring 50, thereby defining a back-to-back configuration of the first outer raceway and the second outer raceway in the outer ring.

[0024] Referring to FIGS. 1-3, and as best shown in FIG. 3, a plurality of load bearing balls 64 and spacer balls 66 are disposed in the first annular cavity 62A and the second annular cavity 62B. Adjacent pairs of the load bearing balls 64 have one of the spacer balls 66 disposed between them. In particular, one of the spacer balls 66 is disposed between and engage every adjacent pair of load bearing balls 64. In FIGS. 1 and 2 the load bearing balls 64 are shown as solid lines and the spacer balls 66 are shown behind the load bearing balls 64 as dashed lines. As shown in FIGS. 2 and 3, the spacer balls 66 have an outside diameter D1 that is about 90 to 93 percent of a diameter D2 of the load bearing balls 64. The load bearing balls 64 have a radius of curvature R2 that is about one half of D2. In one embodiment the load bearing balls 64 and the spacer balls 66 are manufactured from the same material, for example, an AMS-5630 type 440C stainless steel having a minimum Rockwell C scale hardness of 58. The use of the spacer balls 66 reduces ball drag and increases bearing life compared to bearing using cage type separators to space the load bearing balls away from one another. While the load bearing balls 64 and the spacer balls 66 are described as being manufactured from the same material, for example, an AMS-5630 type 440C stainless steel having a minimum Rockwell C scale hardness of 58, the present invention is not limited in this regard as the load bearing balls 64 and/or the spacer balls 66 may be manufactured from materials other than AMS-5630 type 440C stainless steel having a minimum Rockwell C scale hardness of 58.

[0025] The ball bearing cartridge 10 is provided with annular seals 90 disposed in opposing ends of thereof and extending between the outer ring 50 and the inner ring 52. The seals 90 prevent debris from entering the annular cavities 62A and 62B. In addition, the inner ring 52 includes a one or more passages 92 extending through a central portion of the inner ring, for use in introduction of a lubricant such as oil or grease into the annular cavities 62A and 62B. In one embodiment the annular seals are manufactured form a 300 series stainless steel.

[0026] The inner ring 52 and the outer ring 50 are adjusted axially with respect to one another and the load bearing balls and the spacer balls 66 are disposed in the first outer

raceway 50A and the first inner raceway 52A; and in the second outer raceway 50B and second inner raceway 52B, such that the load bearing balls 66 are preloaded (e.g., under compression) to about 500 pounds (about 2222 Newtons) plus or minus 10 %, along the reference lines L I and L2, respectively. Preloading of the load bearing balls 64 in the respective raceways prevents backlash and prevents the load bearing balls from skidding relative to the respective raceways in response to high rotational acceleration of the inner ring 52 relative to the outer ring 50. In addition preloading the ball bearing cartridge to about 500 pounds results in a break-away torque of about 0.80 Newton-meters, of the outer ring 50 relative to the inner ring 52.

[0027] In one embodiment, the ball bearing cartridge 10 has an L10 life of over 9000 hours when being subject to rotational speeds up to 175 RPM, high rotational accelerations, torque loads up to about 4600 Newton-meters, radial loads of up to about 96,000 Newtons and axial loads of up to about 4,500 Newtons.

[0028] While the present disclosure has been described with reference to various exemplary embodiments, it will be understood by those skilled in the art that various changes may be made and equivalents may be substituted for elements thereof without departing from the scope of the invention. In addition, many modifications may be made to adapt a particular situation or material to the teachings of the invention without departing from the essential scope thereof. Therefore, it is intended that the invention not be limited to the particular embodiment disclosed as the best mode contemplated for carrying out this invention, but that the invention will include all embodiments falling within the scope of the appended claims.

What is claimed is:

1. A ball bearing, comprising:

an outer ring having at a first outer raceway and a second outer raceway each being defined by a portion of a radially inward facing surface of the outer ring;

an inner ring disposed within the outer ring and having a first inner raceway and a second inner raceway each being defined by a radially outward facing surface of the inner ring; and

a first plurality of balls disposed partially in the first inner raceway and the first outer raceway,

a second plurality of balls disposed partially in the second inner raceway and the second outer raceway,

the first plurality of balls and the second plurality of balls each including load bearing balls and spacer balls, the spacer balls being disposed between the load bearing balls;

each of the load bearing balls of the first plurality of balls having a first single point of contact with the first outer raceway and second single point of contact with the first inner raceway, the first single point of contact and the second single point of contact defining a first line of contact;

each of the load bearing balls of the second plurality of balls having a third single point of contact with the second outer raceway and fourth single point of contact with the second inner raceway, the third single point of contact and the fourth single point of contact defining a second line of contact;

the first line of contact and the second line of contact having a point of intersection at a point radially away from the outer ring, thereby defining a back-to-back configuration of the first outer raceway and the second outer raceway in the outer ring; and

the load bearing balls being preloaded between the outer ring and the inner ring at predetermined force.

2. The ball bearing of claim 1, wherein each of the spacer balls of the first plurality of balls engages two adjacent load bearing balls to prevent skidding of the load bearing balls relative to the first outer raceway and the first inner raceway, when the outer ring is rotationally accelerated relative to the inner ring.

3. The ball bearing of claim 2, wherein each of the spacer balls of the second plurality of balls engages two adjacent load bearing balls to prevent skidding of the load bearing balls relative to the second outer raceway and the second inner raceway, when the outer ring is rotationally accelerated relative to the inner ring.

4. The ball bearing of claim 1, wherein the load bearing balls are preloaded between the first outer race and the first inner race at a preload force between about 450 to 550 pounds.

5. The ball bearing of claim 1, wherein the load bearing balls and the spacer balls are manufactured from the same material.

6. The ball bearing of claim 1, wherein the load bearing balls and the spacer balls are manufactured from an AMS-5630 type 440C stainless steel.

7. The ball bearing of claim 1, wherein the load bearing balls and the spacer balls are manufactured from an AMS-5630 type 440C stainless steel having a minimum Rockwell C scale hardness of 58.

FIG. 1

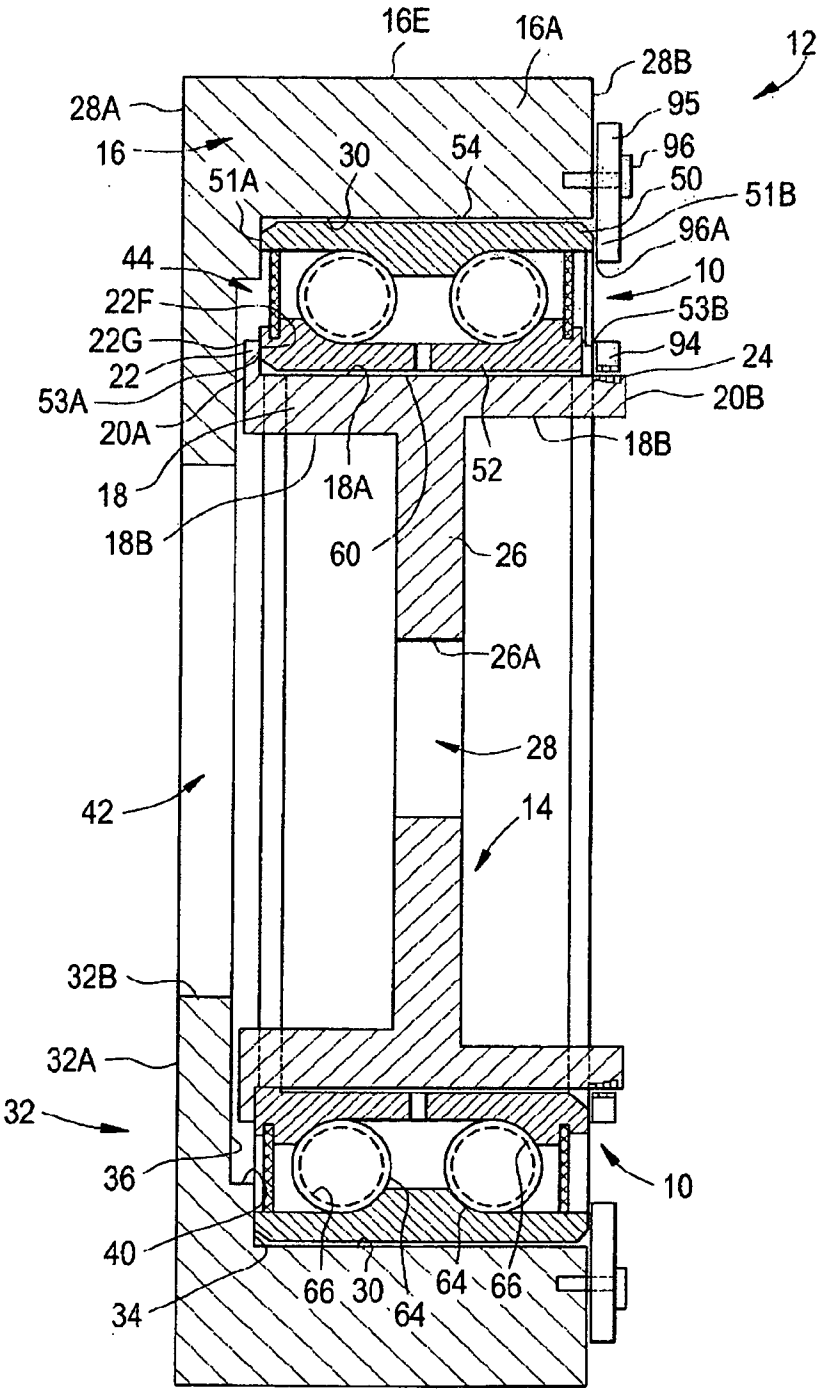
16E
16A
12
28B
28A
95
16
30
54
96
51A
50
51B
96A
44
10
22F
53B
22G
94
24
22
53A
20B
20A
18B
18
18A
52
60
26
26A
28
42
14
32B
32A
32
36
10
40
66
30
64
66
34
64

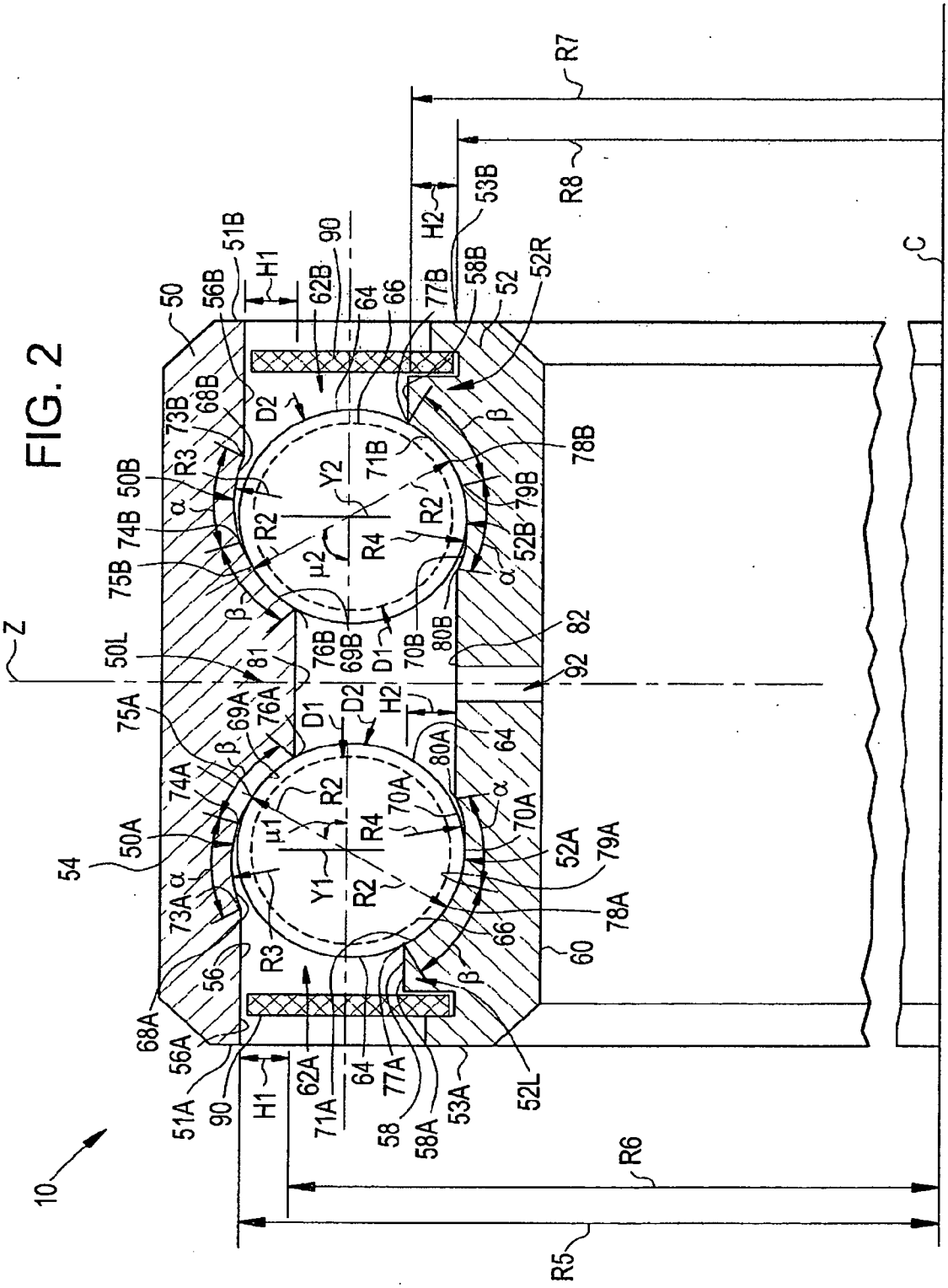
R7
R8
H2
53B
C
50
56B
51B
H1
62B
90
64
66
77B
58B
52
52R
73B
68B
D2
β
78B
R3
71B
50B
Y2
79B
74B
α
R2
R2
52B
75B
μ2
R4
α
β
76B
69B
D1
70B
80B
82
Z
50L
81
92
75A
69A
76A
D1
D2
H2
80A
64
β
74A
R2
70A
α
50A
μ1
R4
70A
52A
79A
54
Y1
R2
73A
α
78A
66
R3
60
56
β
68A
56A
62A
64
77A
52L
51A
90
H1
71A
58
58A
53A
R6
10
R5

FIG. 2

FIG. 3

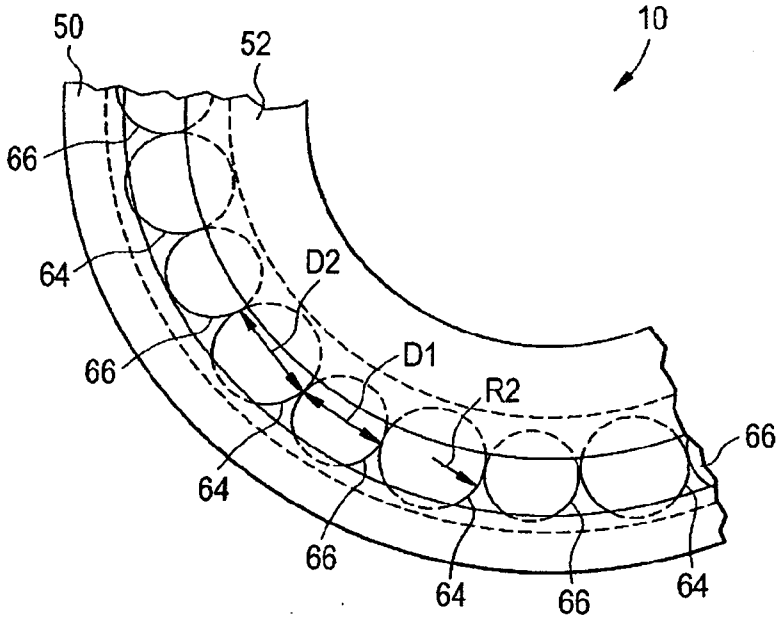

FIG. 4

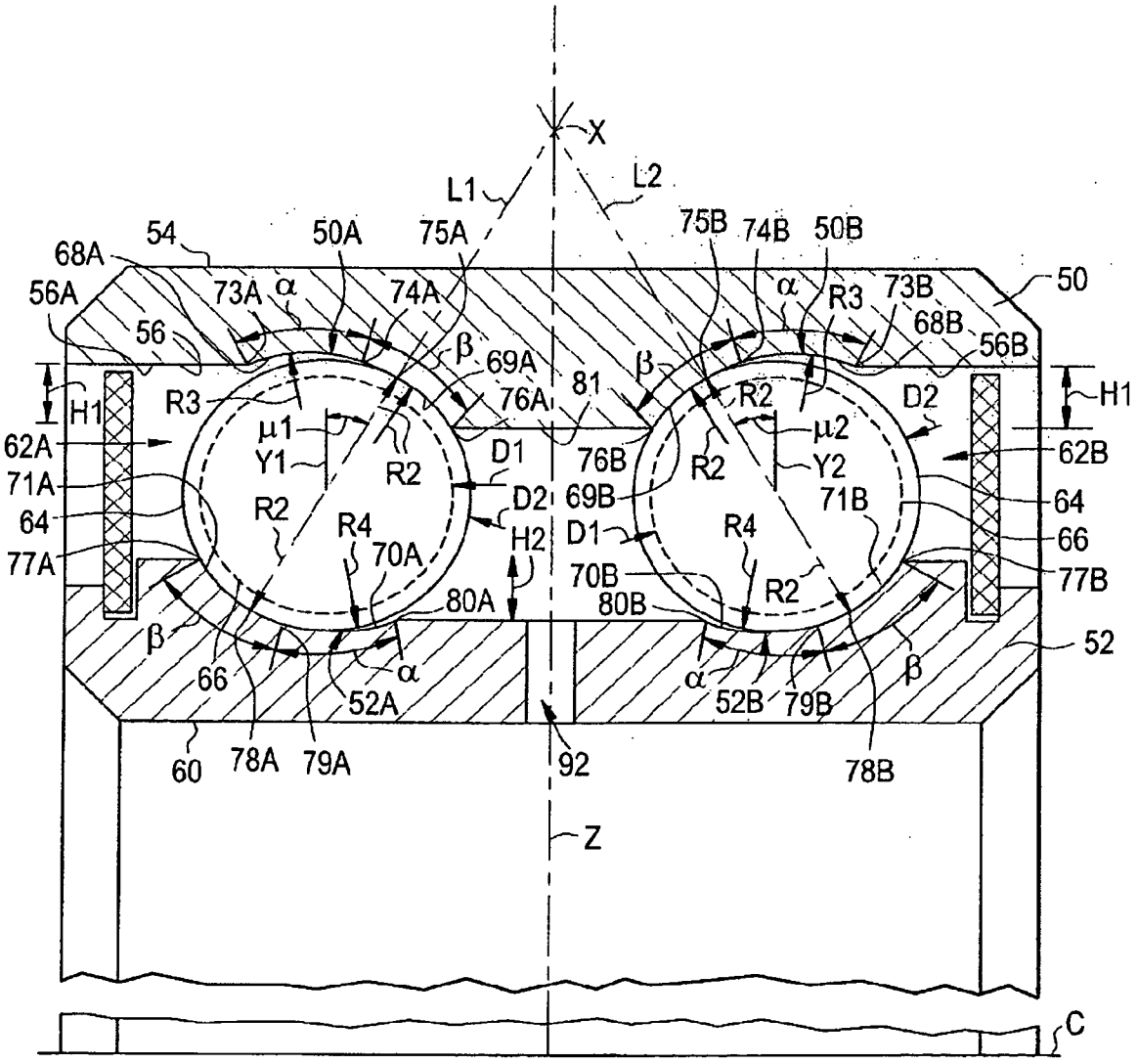
X
L1
L2
68A
54
50A
75A
75B
74B
50B
56A
73A
α
74A
α
R3
73B
50
56
β
69A
β
68B
56B
H1
R3
76A
81
R2
D2
H1
μ1
μ2
62A
Y1
R2
D1
76B
R2
Y2
62B
71A
R2
D2
69B
71B
64
64
R4
70A
H2
D1
R4
66
77A
70B
77B
80A
80B
R2
β
52
66
52A
α
α
52B
79B
β
60
78A
79A
92
78B
Z
C

INTERNATIONAL SEARCH REPORT

International application No
PCT/US2013/040488

A. CLASSIFICATION OF SUBJECT MATTER
INV. F16C19/18 F16C19/20 F16C33/37
ADD.

According to International Patent Classification (IPC) or to both national classification and IPC

B. FIELDS SEARCHED

Minimum documentation searched (classification system followed by classification symbols)
F16C

Documentation searched other than minimum documentation to the extent that such documents are included in the fields searched

Electronic data base consulted during the international search (name of data base and, where practicable, search terms used)
EPO-Internal , WPI Data

C. DOCUMENTS CONSIDERED TO BE RELEVANT

Category*	Citation of document, with indication, where appropriate, of the relevant passages	Relevant to claim No.
X	US 2 724 624 A (BARR IRWIN R) 22 November 1955 (1955-11-22) column 1, line 55 - column 3, line 28; figures 1,2	1-7
X	US 468 067 A (HENRY G. YATES) 2 February 1892 (1892-02-02) page 1, line 21 - page 2, line 27; figures 1-3	1-7
Y	JP 2001 041232 A (K0Y0 SEIKO CO) 13 February 2001 (2001-02-13) abstract; figures 1,2	1-7
Y	US 2006/232425 Al (UEN0 HIR0SHI [JP]) 19 October 2006 (2006-10-19) paragraph [0054] - paragraph [0062]; figure 3	1-7

☐ Further documents are listed in the continuation of Box C.

☒ See patent family annex.

* Special categories of cited documents :

"A" document defining the general state of the art which is not considered to be of particular relevance

"E" earlier application or patent but published on or after the international filing date

"L" documentwhich may throw doubts on priority claim(s) orwhich is cited to establish the publication date of another citation or other special reason (as specified)

"O" document referring to an oral disclosure, use, exhibition or other means

"P" document published prior to the international filing date but later than the priority date claimed

"T" later document published after the international filing date or priority date and not in conflict with the application but cited to understand the principle or theory underlying the invention

"X" document of particular relevance; the claimed invention cannot be considered novel or cannot be considered to involve an inventive step when the document is taken alone

"Y" document of particular relevance; the claimed invention cannot be considered to involve an inventive step when the document is combined with one or more other such documents, such combination being obvious to a person skilled in the art

"&" document member of the same patent family

Date of the actual completion of the international search	Date of mailing of the international search report
22 January 2014	29/01/2014

Name and mailing address of the ISA/	Authorized officer
European Patent Office, P.B. 5818 Patentlaan 2 NL - 2280 HV Rijswijk Tel. (+31-70) 340-2040, Fax: (+31-70) 340-3016	Fischbach , Gerhard

INTERNATIONAL SEARCH REPORT

Information on patent family members

International application No
PCT/US2013/040488

Patent document cited in search report	Publication date	Patent family member(s)	Publication date
US 2724624 A	22-11-1955	NONE	
US 468067 A	02-02-1892	NONE	
JP 2001041232 A	13-02-2001	NONE	
US 2006232425 A1	19-10-2006	CN 1784555 A	07-06-2006
		CN 101196212 A	11-06-2008
		EP 1624206 A1	08-02-2006
		JP 4618125 B2	26-01-2011
		US 2006232425 A1	19-10-2006
		WO 2004102018 A1	25-11-2004