US00D326448S

United States Patent [19]

Fukuda

[11] Patent Number: Des. 326,448

[45] Date of Patent: ** May 26, 1992

[54] **DOCUMENT SCANNER**

[75] Inventor: **Kouki Fukuda**, Osaka, Japan

[73] Assignee: **Sharp Corporation**, Osaka, Japan

[**] Term: **14 Years**

[21] Appl. No.: **480,218**

[22] Filed: **Feb. 14, 1990**

[30] **Foreign Application Priority Data**

Aug. 25, 1989 [JP] Japan 1-31045

[52] **U.S. Cl.** **D14/107**

[58] **Field of Search** ..... D14/100, 105, 107, 114, D14/116; D16/1, 2, 223, 27-32; D18/36, 12, 22, 37, 40; 235/454, 462, 470-473, 475, 479; 250/208, 203 R, 566, 568, 239; 382/58, 62, 63, 65; 355/231, 233; 354/80-82; 358/408, 473, 474, 479

[56] **References Cited**

U.S. PATENT DOCUMENTS

D. 293,794	1/1988	Nakade	D14/107
D. 302,007	7/1989	Hara et al.	D14/107
D. 303,660	9/1989	Yamagiwa et al.	D14/107
D. 305,329	1/1990	Hiroki et al.	D14/107
D. 308,667	6/1990	Makidera	D14/107 X

FOREIGN PATENT DOCUMENTS

706332	5/1987	Japan	D14/107

Primary Examiner—Wallace R. Burke
Assistant Examiner—Freda S. Nunn
Attorney, Agent, or Firm—Flehr, Hohbach, Test, Albritton & Herbert

[57] **CLAIM**

The ornamental design for a document scanner, as shown and described.

DESCRIPTION

FIG. **1** is a perspective view of a document scanner showing my new design;
FIG. **2** is a perspective view thereof with the cover open;
FIG. **3** is a top plan view thereof;
FIG. **4** is a bottom plan view thereof;
FIG. **5** is a front elevational view thereof;
FIG. **6** is a rear elevational view thereof;
FIG. **7** is a right side elevational view thereof; and,
FIG. **8** is a left side elevational view thereof.

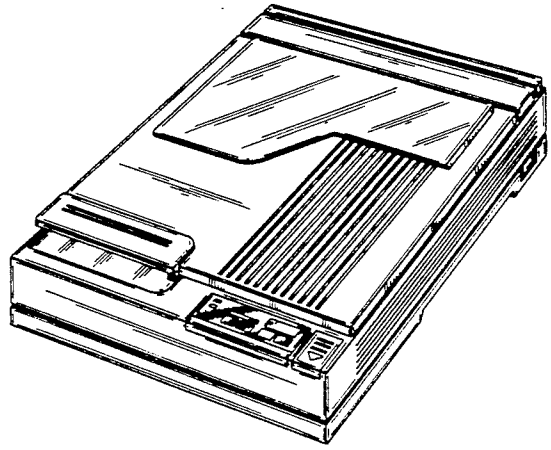

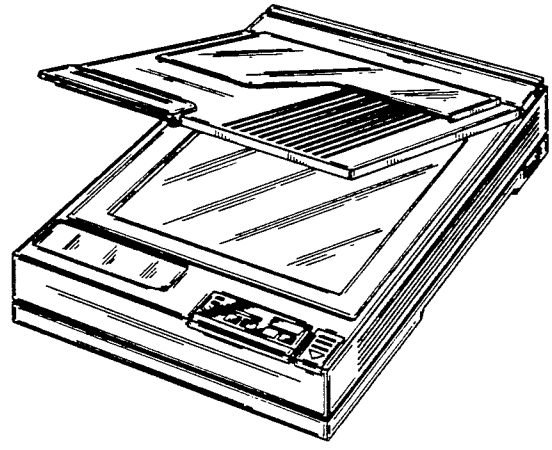

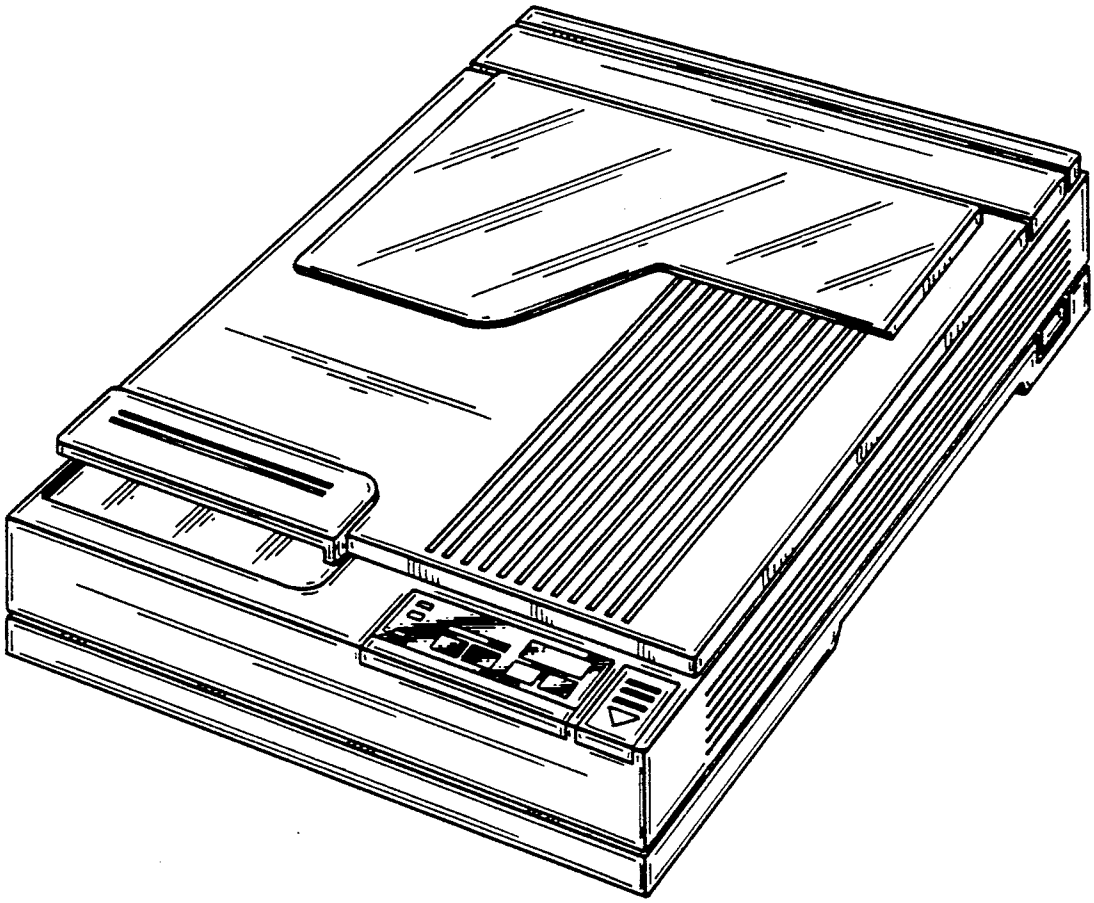

FIG_1

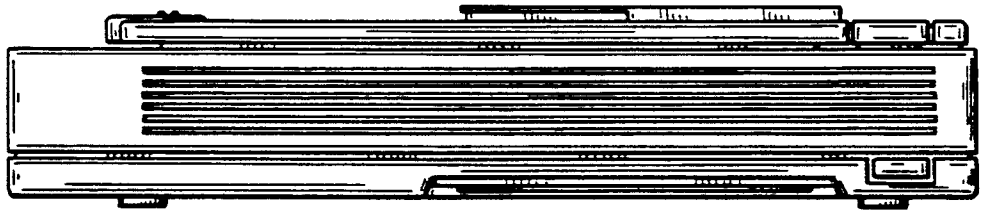

FIG_7

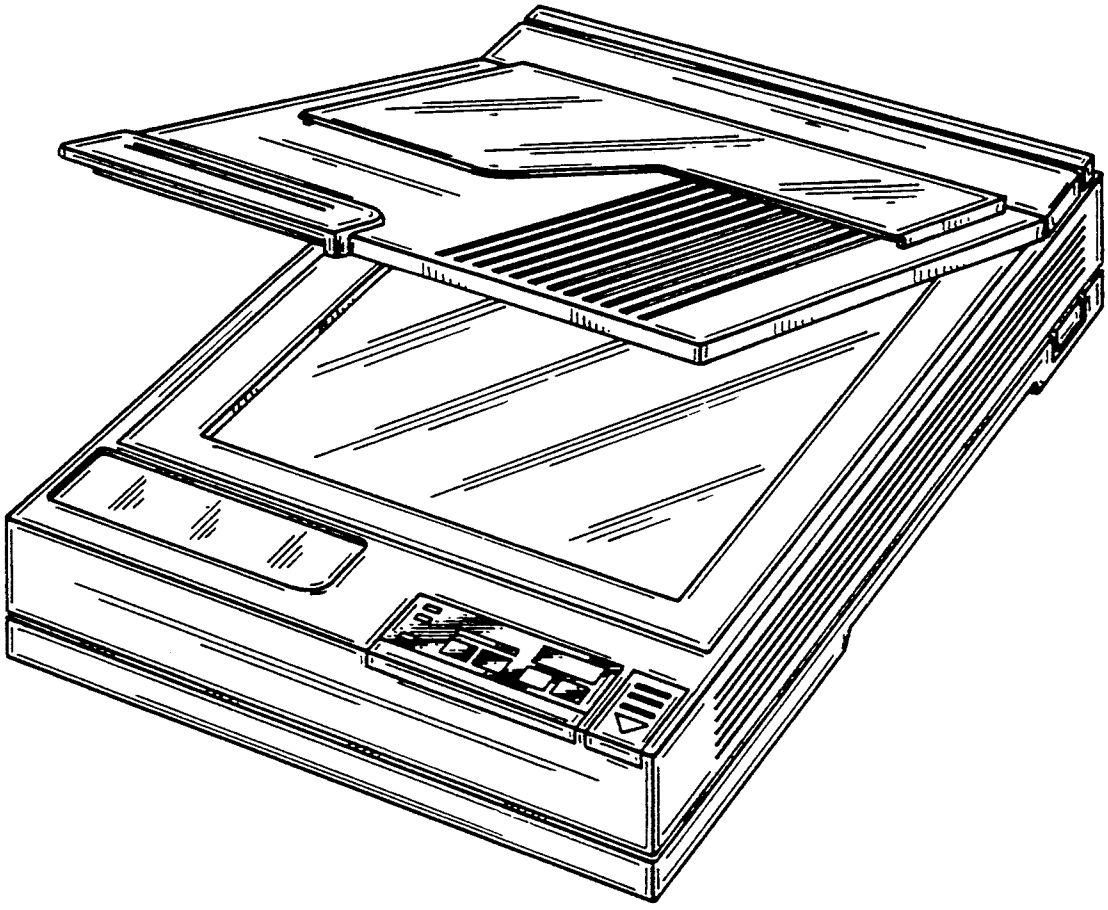

FIG_2

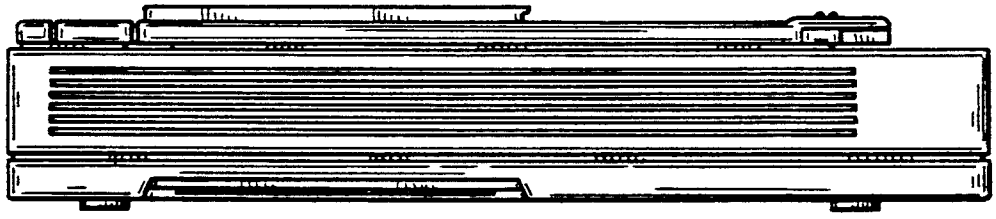

FIG_8

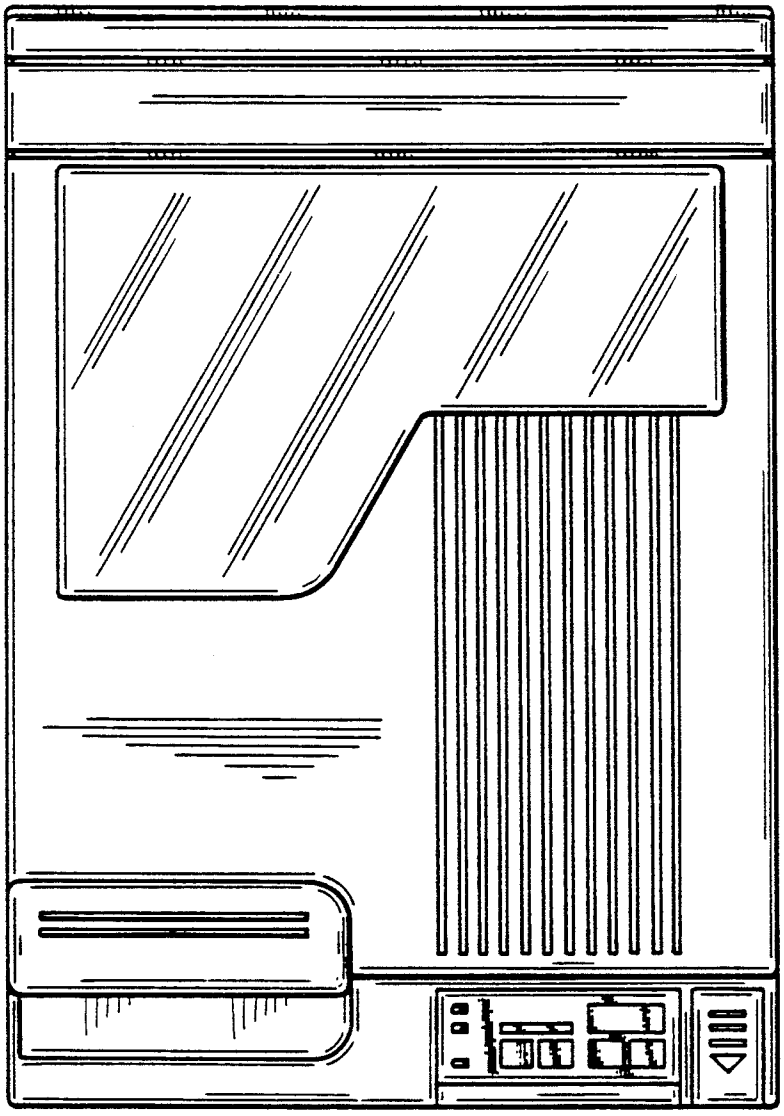

FIG_3

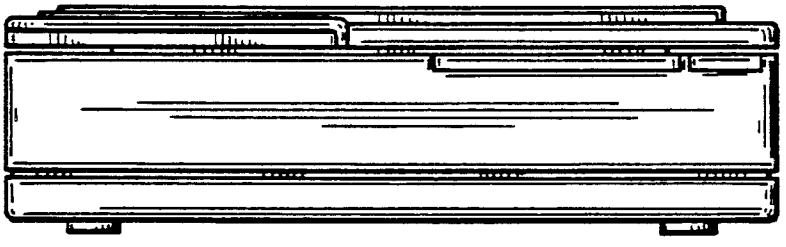

FIG_5

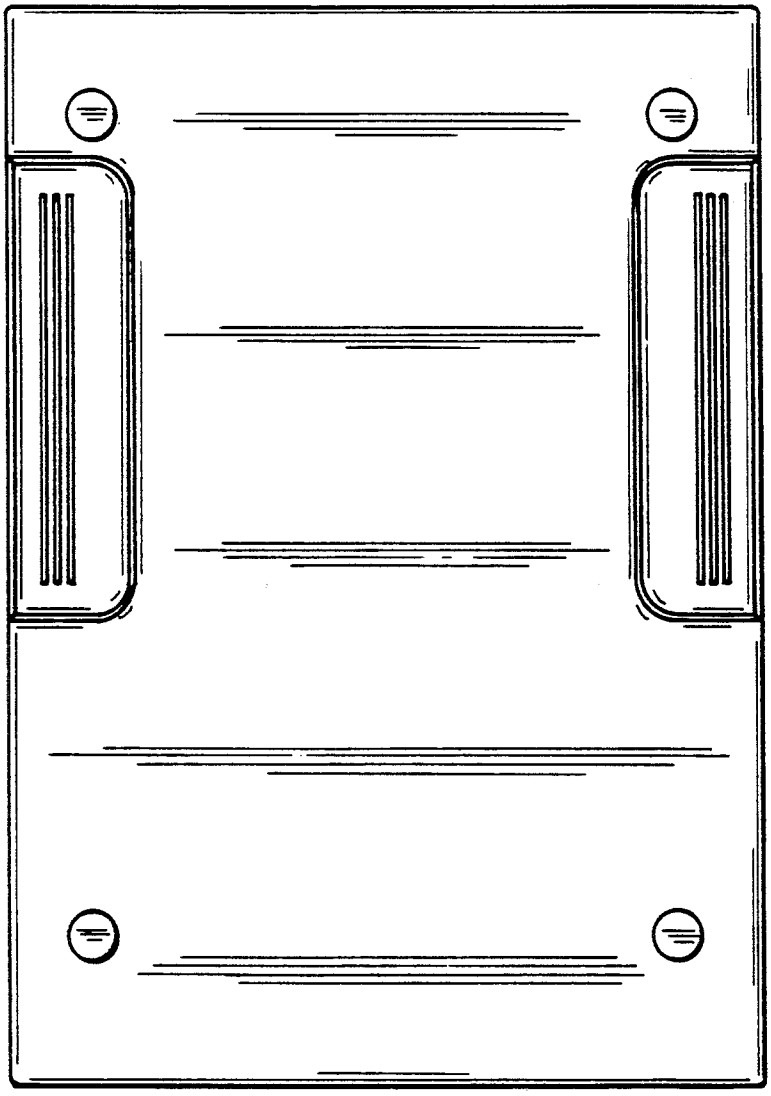

FIG_4

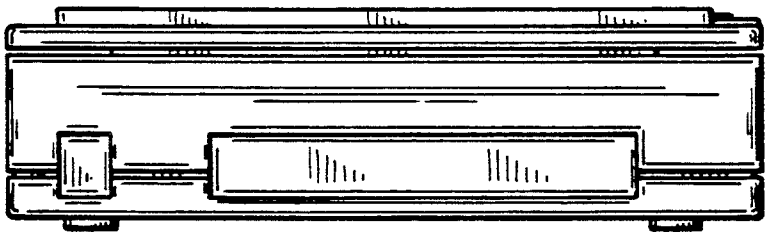

FIG_6