US0D1025008S

(12) United States Design Patent

Hachiri et al.

(10) Patent No.: US D1,025,008 S

(45) Date of Patent: ** Apr. 30, 2024

(54) **HEADPHONE WITH MICROPHONE**

(71) Applicant: **JVCKENWOOD Corporation**, Yokohama (JP)

(72) Inventors: **Daisuke Hachiri**, Yokohama (JP); **Satoshi Yoshimura**, Yokohama (JP)

(73) Assignee: **JVCKENWOOD Corporation**, Yokohama (JP)

(**) Term: **15 Years**

(21) Appl. No.: **29/812,783**

(22) Filed: **Oct. 25, 2021**

(30) **Foreign Application Priority Data**

Jun. 22, 2021 (JP) ..... 2021-013443 D

(51) **LOC (14) Cl.** **14-01**

(52) **U.S. Cl.**
USPC **D14/206**

(58) **Field of Classification Search**
USPC D14/206, 226, 205; D29/112; 2/209; 381/380–381, 370, 374, 378
CPC H04R 25/00; H04R 25/02; H04R 1/1066; H04R 1/1016; H04R 5/033; H04R 5/0335; H04R 1/105; H04R 1/1091; A61F 11/14
See application file for complete search history.

(56) **References Cited**

U.S. PATENT DOCUMENTS

D302,429 S * 7/1989 Leer D14/206
D398,309 S * 9/1998 Bergin D14/206
6,678,897 B2 * 1/2004 Lindgren A61F 11/14 181/129
6,724,906 B2 * 4/2004 Naksen H04R 1/1066 381/370
7,457,649 B1 * 11/2008 Wilson H04R 1/1025 381/374
D613,266 S * 4/2010 Barry D14/205
7,735,154 B2 * 6/2010 Gellis A61F 11/14 2/209
D635,958 S * 4/2011 Ando D14/205
8,732,864 B2 * 5/2014 Fountain A61F 11/14 2/209
8,767,996 B1 * 7/2014 Lin H04R 1/1091 381/370
D713,375 S * 9/2014 Dedinas D14/206
8,861,770 B2 * 10/2014 Blair H04R 1/1058 381/378
D722,302 S * 2/2015 Lee D14/205
(Continued)

FOREIGN PATENT DOCUMENTS

CN 306915143 * 11/2021
CN 307141859 * 3/2022
EM 008831416-0001 * 1/2022

Primary Examiner — Paula Allen Greene
(74) *Attorney, Agent, or Firm* — Amin, Turocy & Watson, LLP

(57) **CLAIM**

The ornamental design for a headphone with microphone, as shown and described.

DESCRIPTION

FIG. **1** is a right, front, and bottom perspective view of a headphone with microphone;
FIG. **2** is a right, rear, and bottom perspective view thereof;
FIG. **3** is a front elevational view thereof;
FIG. **4** is a rear elevational view thereof;
FIG. **5** is a top plan view thereof;
FIG. **6** is a bottom plan view thereof;
FIG. **7** is a left side elevational view thereof; and,
FIG. **8** is a right side elevational view thereof.
The broken lines shown in the drawings illustrate portions of the headphone with microphone that form no part of the claimed design.

1 Claim, 4 Drawing Sheets

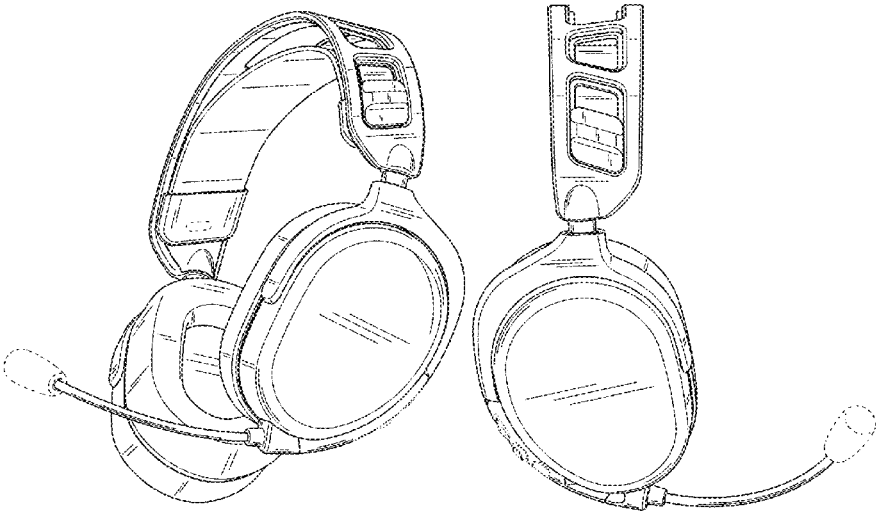

(56) **References Cited**

U.S. PATENT DOCUMENTS

D724,560	S	*	3/2015	Galler	D14/205
D726,146	S	*	4/2015	Binder	D14/205
D732,001	S	*	6/2015	Licht	D14/205
D736,176	S	*	8/2015	Rapitsch	D14/205
D757,680	S	*	5/2016	Kelly	D14/205
D766,206	S	*	9/2016	Paterson	D14/205
D766,208	S	*	9/2016	Paterson	D14/205
D778,258	S	*	2/2017	Hsu	D14/205
D784,957	S	*	4/2017	Hsieh	D14/205
D788,071	S	*	5/2017	Logan	D14/205
D800,091	S	*	10/2017	Paterson	D14/206
D800,092	S	*	10/2017	Paterson	D14/206
D805,257	S	*	12/2017	Maansson	D29/112
D807,585	S	*	1/2018	Fletcher	D29/112
D843,343	S	*	3/2019	Paterson	D14/205
D848,973	S	*	5/2019	Karacal	D14/205
D857,656	S	*	8/2019	Ipsen	D14/206
D864,155	S	*	10/2019	Liu	D14/206
D868,027	S	*	11/2019	Paterson	D14/206
D868,028	S	*	11/2019	Paterson	D14/206
10,667,029	B2	*	5/2020	Cochran	H04R 1/1066
D890,123	S	*	7/2020	Yoshimura	D14/205
D935,439	S	*	11/2021	Zheng	D14/206
D949,822	S	*	4/2022	Yoshimura	D14/205
D950,519	S	*	5/2022	Xie	D14/206
D971,874	S	*	12/2022	Yoshimura	D14/205
D981,367	S	*	3/2023	Renwick	D14/206
D984,410	S	*	4/2023	He	D14/206
2001/0017925	A1	*	8/2001	Ceravolo	H04M 1/05 381/370
2003/0037366	A1	*	2/2003	Lindgren	A61F 11/14 2/209
2011/0209273	A1	*	9/2011	Fountain	A61F 11/14 2/423
2012/0288131	A1	*	11/2012	Vaerum	H04R 1/1066 381/378
2014/0177884	A1	*	6/2014	Minarik	H04R 5/0335 381/309
2015/0195640	A1	*	7/2015	Essabar	H04R 1/1058 381/378
2016/0277828	A1	*	9/2016	Oh	H04R 1/105
2017/0019728	A1	*	1/2017	Cochran	H04R 1/1091
2017/0347194	A1	*	11/2017	Nyegaard	H04R 1/1058
2018/0054667	A1	*	2/2018	Yamkovoy	H04W 4/80
2020/0396532	A1	*	12/2020	Bui	H04R 1/1083

* cited by examiner

Fig.1

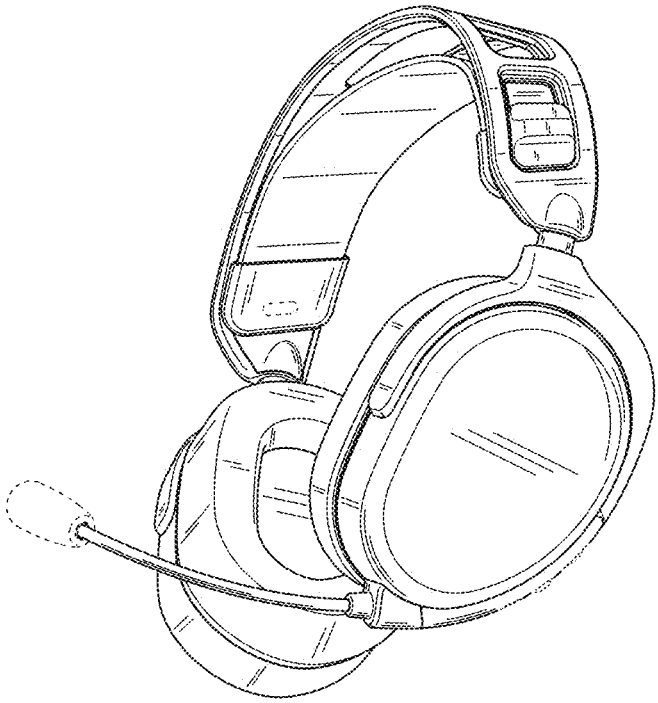

Fig.2

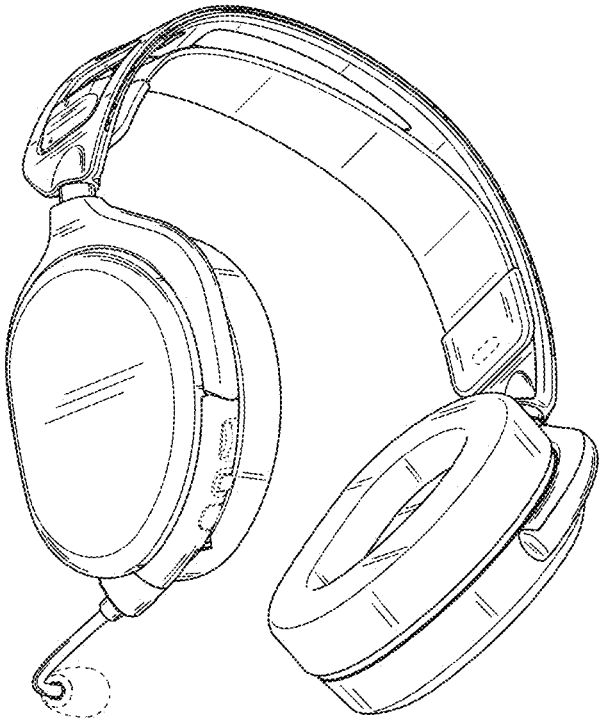

Fig.3

Fig.4

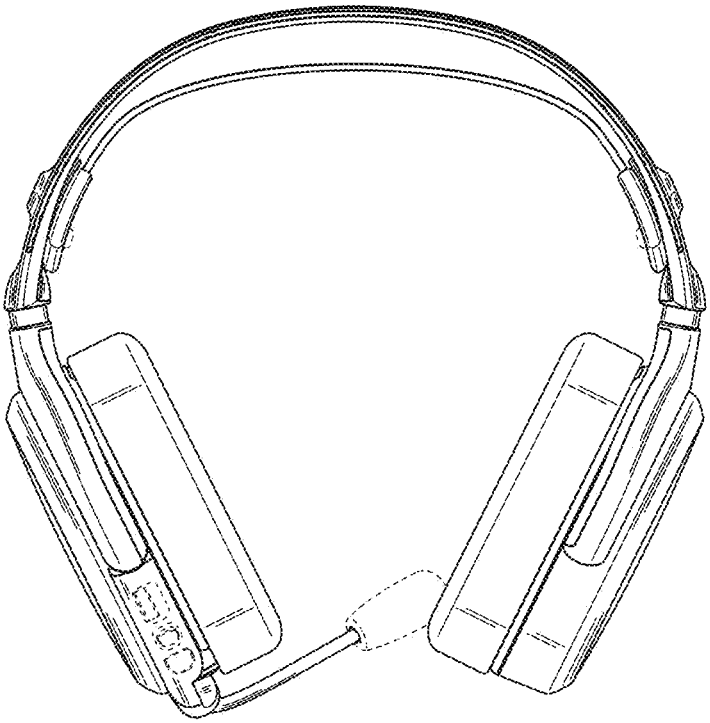

Fig.5

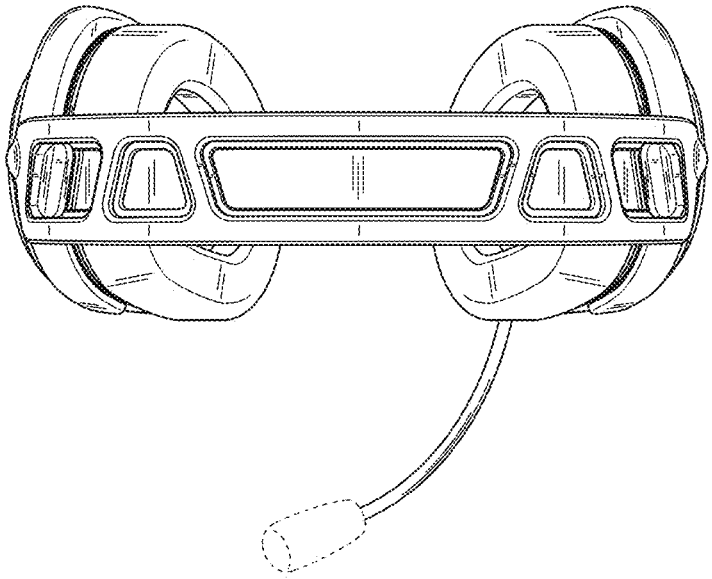

Fig.6

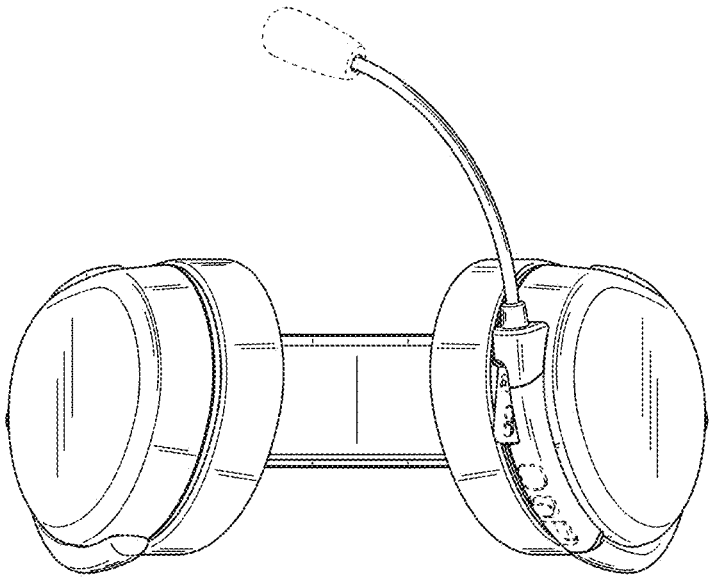

Fig.7

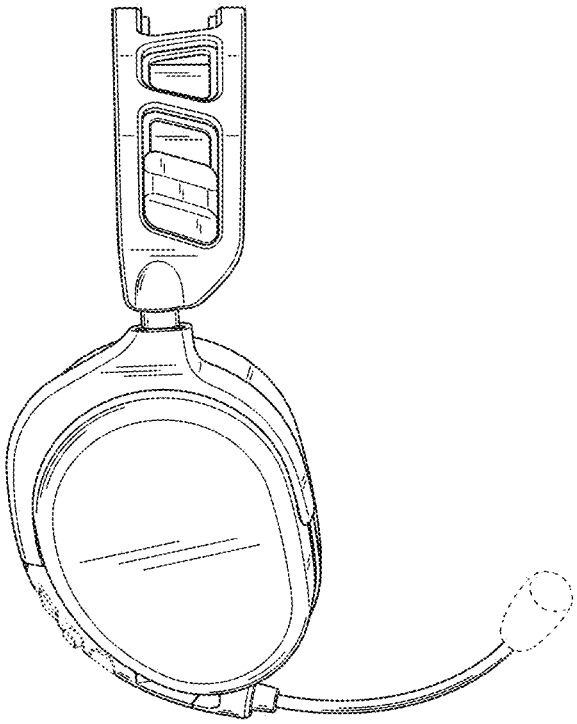
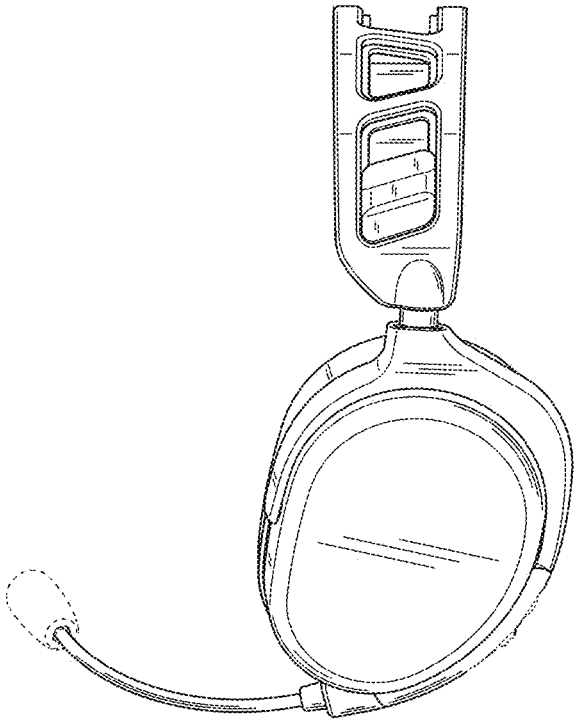
Fig.8