C. F. NEWPORT.

WATER HEATER.

APPLICATION FILED JUNE 19, 1912.

1,068,810.

Patented July 29, 1913.

4 SHEETS—SHEET 1.

Fig. 2.

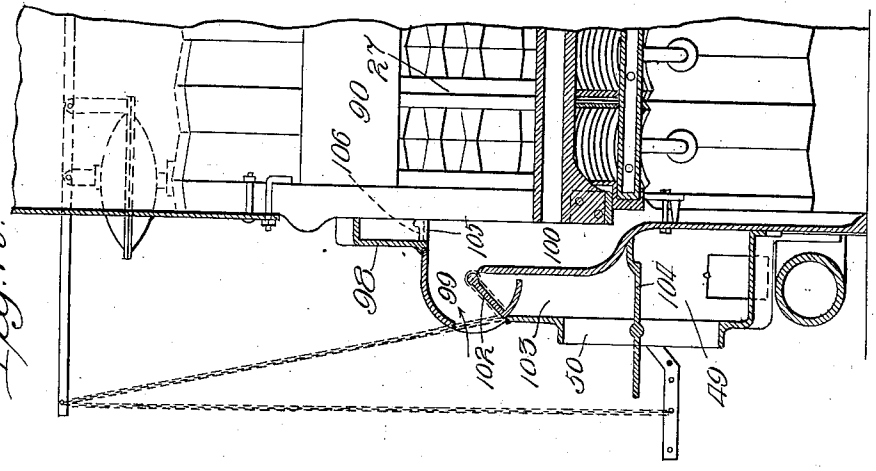

Fig. 1.

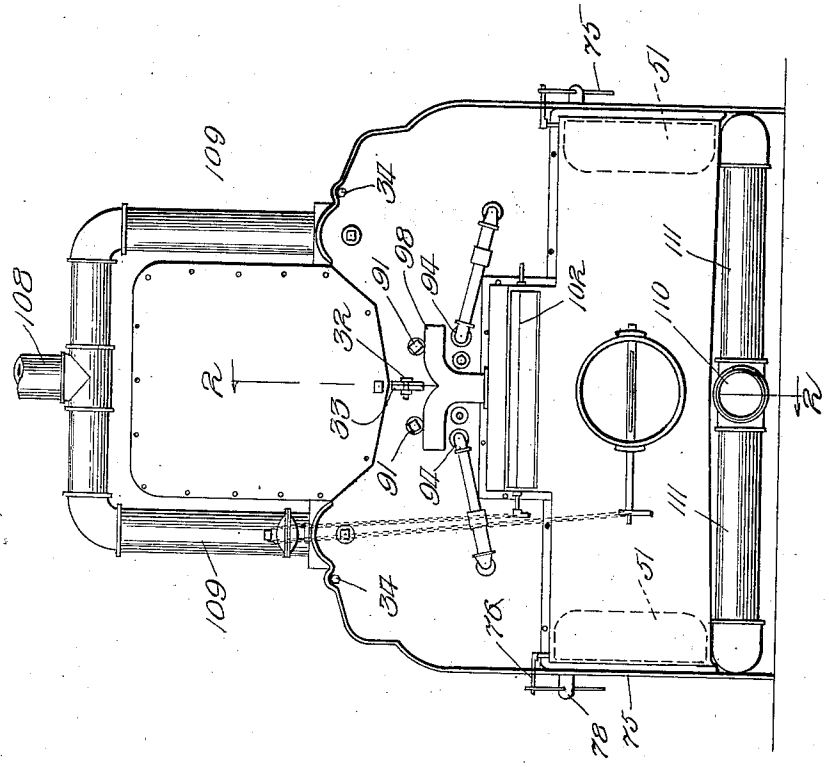

Witnesses:
Geo. Lapsley
A. S. Gaither

Inventor:
Charles F. Newport
by William L. Hall
Atty

COLUMBIA PLANOGRAPH CO., WASHINGTON, D. C.

C. F. NEWPORT.

WATER HEATER.

APPLICATION FILED JUNE 19, 1912.

1,068,810.

Patented July 29, 1913.

4 SHEETS—SHEET 2.

Fig. 3.

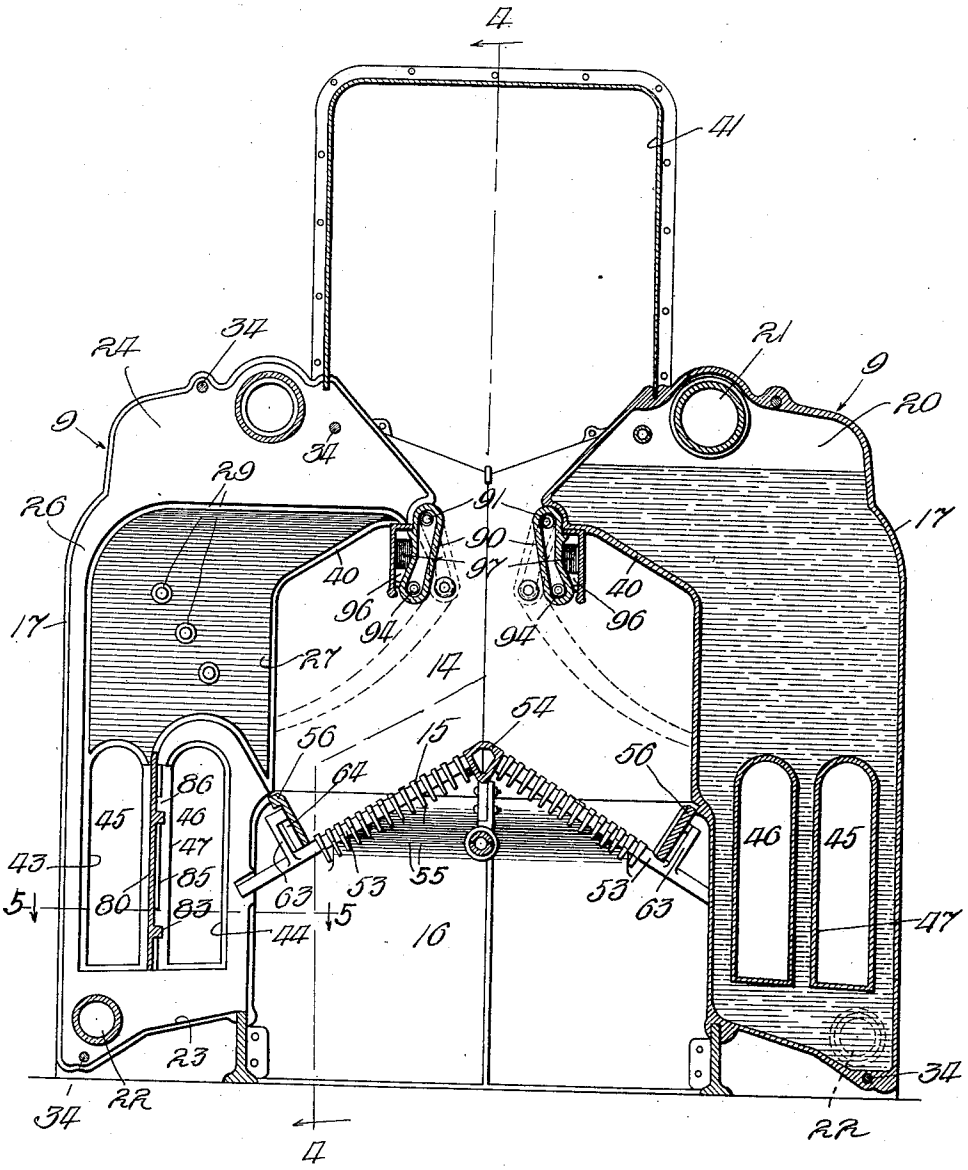

Witnesses:
Geo Lugen
H. S. Gaither

Inventor:
Charles F. Newport
by William L. Hall
Atty

COLUMBIA PLANOGRAPH CO., WASHINGTON, D. C.

C. F. NEWPORT.

WATER HEATER.

APPLICATION FILED JUNE 19, 1912.

1,068,810.

Patented July 29, 1913.

4 SHEETS—SHEET 3.

Fig. 4.

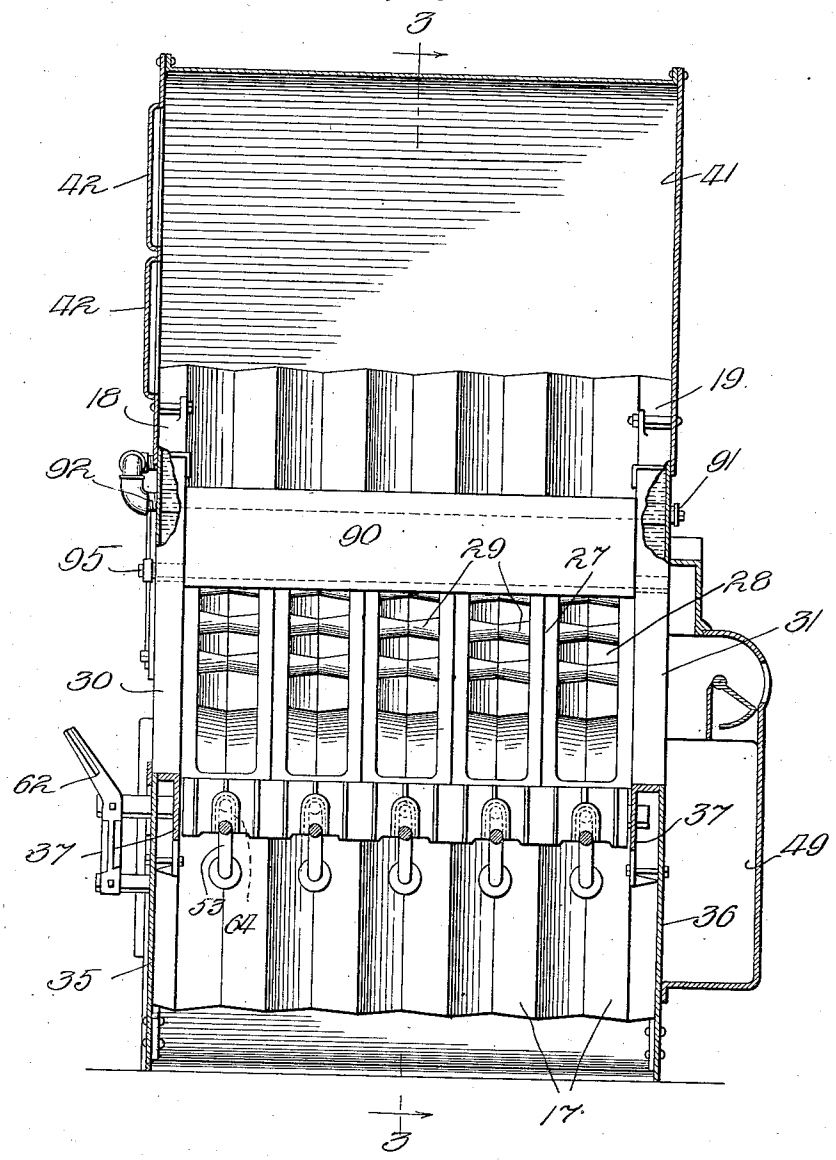

Witnesses:
Fred Lupin
A. S. Gaither

Inventor
Charles F. Newport
by William D. Hall
Atty

C. F. NEWPORT.

WATER HEATER.

APPLICATION FILED JUNE 19, 1912.

1,068,810.

Patented July 29, 1913.

4 SHEETS—SHEET 4.

Fig. 5.

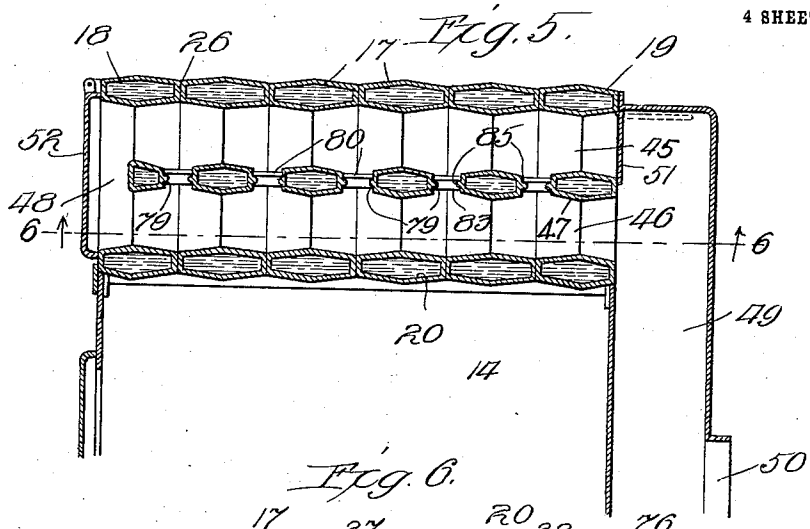

Fig. 6.

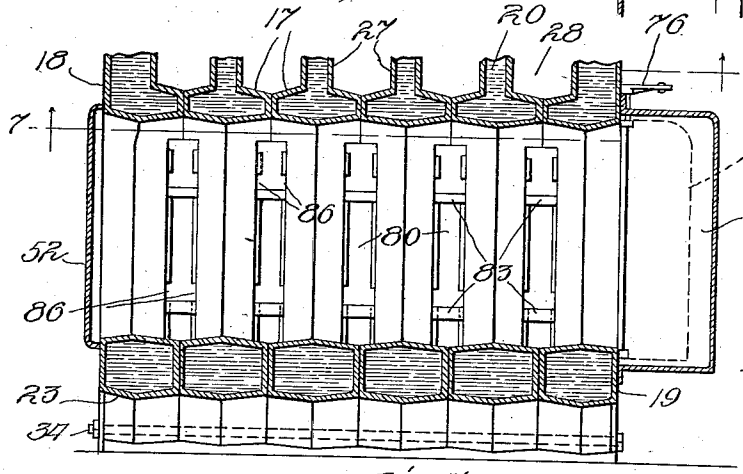

Fig. 8.

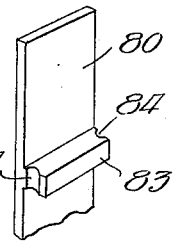

Fig. 7.

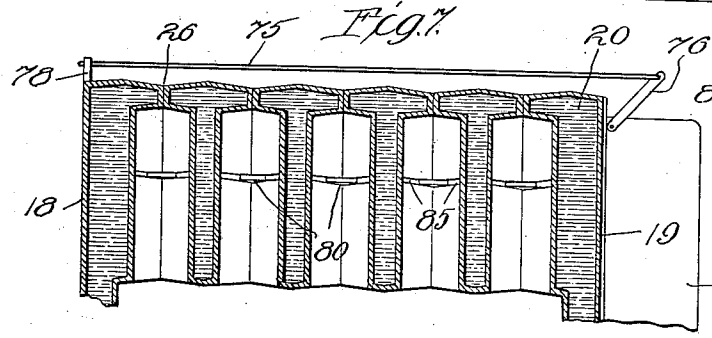

Witnesses:
Geo. Lupus
H. S. Gaither

Inventor:
Charles F. Newport
by William L. Hall.
Attys

COLUMBIA PLANOGRAPH CO., WASHINGTON, D. C.

UNITED STATES PATENT OFFICE.

CHARLES F. NEWPORT, OF CHICAGO, ILLINOIS.

WATER-HEATER.

1,068,810. Specification of Letters Patent. Patented July 29, 1913.

Original application filed May 15, 1911, Serial No. 627,200. Divided and this application filed June 19, 1912. Serial No. 704,584.

To all whom it may concern:

Be it known that I, CHARLES F. NEWPORT, a citizen of the United States, and a resident of Chicago, in the county of Cook and State of Illinois, have invented certain new and useful Improvements in Water-Heaters; and I do hereby declare that the following is a full, clear, and exact description thereof, reference being had to the accompanying drawings, and to the characters of reference marked thereon, which form a part of the specification.

This invention relates to improvements in water heaters or steam boilers, more especially adapted to furnish hot water or steam to heating systems of buildings.

The invention relates more particularly to improvements in the arrangement of the flues through which the heated products of combustion pass from the fire box, in contact with the surfaces of the boiler to be heated, and thence to the smoke box.

It relates further to means for modifying or controlling the path of the flue travel of the gases of combustion from the fire box to the smoke box to meet local draft requirements, the character of the fuel and other conditions.

My improvements are herein shown as applied to a sectional water heater of that kind wherein the water spaces of the heater are formed in hollow or cored out cast metal sections which are grouped and secured together with nipple connections in the manner of the sections of a steam or hot water radiator to permit intercirculation of water or steam therethrough, and are so shaped that when brought together flues are formed through which the gases of combustion pass from the fire box to the smoke stack.

The invention consists in the matters herein set forth and more particularly pointed out in the appended claims.

In the drawings,—Figure 1 is a rear end elevation of a water heater embodying my invention. Fig. 2 is a fragmentary vertical section of the rear part of the heater on the line 2—2 of Fig. 1. Fig. 3 is a transverse vertical section on the line 3—3 of Fig. 4, the same being taken in a plane between adjacent heater sections at one side of said figure and through one of the heater sections at the other side thereof. Fig. 4 is a vertical section on the indirect line 4—4 of Fig. 3. Fig. 5 is a fragmentary horizontal section on the line 5—5 of Fig. 3. Fig. 6 is a fragmentary vertical section on the line 6—6 of Fig. 5. Fig. 7 is a fragmentary horizontal section on the lines 7—7 of Fig. 6. Fig. 8 is a fragmentary perspective view of a removable plate by which to modify the path of the flue travel for the gases of combustion.

As shown in the drawings, the water heater is composed of two groups of cast-metal sections 9, one at one side and the other at the other side of an intermediate fire box 14 equipped with a fuel supporting grate 15 and with an ash pit 16 therebelow. Each group comprises the intermediate sections 17, 17 and the front and rear end sections 18, 19 respectively. Each of said sections is cored out to provide therein a water space 20, and the water spaces of adjacent sections communicate with each other through connecting nipples 21, 22 arranged at the bottoms and at the tops of the sections (Fig. 3). At their lower parts 23 below the fire box and at their upper parts 24 above the fire box, as well as along their outer marginal parts 26, the sections 17, 18 and 19 are made of such thickness as to fit closely together, as best shown in Figs. 5, 6 and 7, thereby leaving no spaces at these parts for the passage of heated gases between the sections. The central parts of the sections abreast the fire box, and extending from the inner side thereof to the thickened portions or rims 26 are made thinner, as shown at 27 so as to form between the thinner portions lateral passages 28 for the heated gases that pass upwardly from the fire box. Said passages 28 conduct the heated gases to flues arranged at the sides of the heater, as will hereinafter appear. Baffle members consisting of lugs 29 or other obstructions cast on or otherwise carried by the sections constitute means for breaking up the currents of heated gases as they pass from the fire box to the flues.

The front and rear sections 18 and 19, respectively, of the heater are each shown as made of two like parts, the lateral outer sides of which fit the end ones of the intermediate sections 17. The lateral inner sides 30 and 31, respectively, of the end sections are made thinner than the outer sides thereof and constitute the end walls of the fire

box 14. They are joined at the center of the front and rear walls in any suitable manner, as for instance by the bolts 32, which extend through lugs or flanges 33 on the adjoining edges of said wall sections. The ash pit front and rear walls 35, 36 are made of thinner uncored plates and the triangular dead plates 37, 37 may be employed where the thinner ash pit walls extend above the lower sides of the grates to bring the same flush with the inner faces of the fire box and walls. The said intermediate and end sections may be attached together in assembled relation by means of the rods 34 which are arranged at the upper and lower ends of the sections, said rods having the form of headed bolts which are screw-threaded and provided with nuts to clamp the sections together. The said intermediate sections 17 are formed above the fire box 14 and at their inner sides with inwardly extending, overhanging portions 40, between which the fuel is fed to the fire box 14 from a magazine 41 located above and supported in any suitable manner on the said sections, said magazine having at its front end one or more openings closed by doors 42, 42 through which openings fuel is fed to the magazine. Each of said sections 17, 18 and 19 is provided at its lower end, and generally below the level of the fire box, with two openings 43, 44 located one laterally outside the other, and said openings, when the sections are assembled and fixed together, constitute outer and inner flues 45, 46 through which the heated gases of combustion pass from the fire box 14 on their way to the exit flue or smoke stack of the heater. Said flues are separated by partitions 47 which are also cored out to constitute a portion of the water space of the heater. At the front end of the heater the flues 45, 46 communicate with each other through a transverse passage 48. The rear ends of said inner flues 46 communicate directly with a smoke box 49 having an opening 50 by which to connect the exit pipe or smoke stack thereto. The rear ends of the outer flues 45 are also adapted to communicate directly with the smoke box, but said rear ends of the flues 45 are normally closed by, what may be termed, direct draft dampers 51. At the front of the heater are arranged doors 52 which close openings through which access may be had to the flue passages 45, 46 and associated parts.

The lateral passages 28 formed between the thinner portions or fingers 27 of the heater sections communicate at their outer sides with the outer flues 45, so that the heated gases of combustion pass from the fire box, through the passages 28, directly to said outer flues. Normally, with the direct draft damper 51 closed, as shown in full lines in Fig. 5, the paths of flue travel are forwardly through the outer flues 45, through the connecting passages 48 and thence rearwardly through the inner flues 46, directly to the smoke box. In order to increase the effectiveness of the draft, as when starting the fire, or when operating under unusual conditions, the direct draft dampers 51 may be opened to the dotted line positions indicated in Figs. 5 and 6, whereupon the heated gases of combustion will pass directly rearwardly through the outer flues 45 to the smoke box. The said direct draft dampers 51 may be operated from the front of the furnace through the medium of endwise reciprocable actuating rods 75 attached at their rear ends to crank arms 76 connected with the dampers, said rods 75 extending at their forward ends through suitable guides 78 at the front of the heater.

In order to permit the path of flue travel of the heated gases of combustion to be adjusted to correspond to different conditions of draft, and also to fuels of different characters, the partitions 47 may be provided at different parts in their lengths with narrow, longitudinally spaced vertical openings 79, 79 adapted to be closed by removable members or plates 80, 80. Each of said closure members 80 consists of a narrow, elongated plate arranged to cover one of the openings 79 between adjacent sections of the partitions 47. They are shown as removably fixed in place by means of lugs 83 which extend laterally therefrom near their tops and bottoms, and are provided at their ends with notches 84, 84 to fit over ribs 85, 85 on the adjacent faces of the partition sections at the partition openings 79. In order to permit ready removal of the said plates the said ribs 85 may be discontinued at 86 to form upper and lower open spaces or notches of such dimensions that when the plates are raised to bring the lugs 83 opposite the open spaces the plates may be laterally removed. In replacing the plates the lugs are passed laterally through the notches 86 until the notches 84 are in line with the ribs 85, whereupon, when the plates are dropped, the lugs drop below the notches 86 whereby the said plates are removably locked in place. When said removable plates are employed the adjustment of the path of flue travel will usually be effected by first removing the forwardmost one or more of the plates 80 so as to thereby afford communication from one flue to the other at points intermediate the ends of the flues and thereby shorten the path of flue travel. One or more of said plates may be thus removed to vary the path of the flue travel to conform to different conditions of draft, or to suit different kinds of fuel. In some instances all of said plates may be thus removed. Thus it will be seen that the path of flue travel is variable or adjustable with-

in wide ranges to adapt the heater to different conditions of draft and fuel. Access to the removable partition plates 80 may be readily had through the door openings of the front doors 52, 52 before referred to.

The rocking bars 53, 53 of the grate incline downwardly and outwardly from a central tubular ridge bar 54 to the heater sections and are mounted at their lower and upper ends in sockets formed in the inner sides of the heater sections 17 and the said ridge bar 54, respectively. Said rocker bars carry grate fingers 55, 55 of any usual or preferred construction, and are adapted to be rocked on their axes to shake the fire bed, by means of the actuating bars 56, 56 which are reciprocated by the hand levers 62 at the front of the furnace and are connected to the grate bars by means of the integral cranks 63 on the grate bars which engage the recesses 64 in the outer or rear faces of the actuating bars.

The grate and its actuating means constitute no part of the present invention, but said construction is claimed in my co-pending application filed of even date herewith, and which, together with the present application has been divided from a parent pending application filed on the 15th day of May, 1911, Serial No. 627,200.

The upper inclined faces of the overhanging parts 40 of the heater sections constitute the tapered lower sides of the magazine 41 which direct the fuel to the feed throat of the magazine. In order to control the feed of the fuel from the magazine to the fire box I have provided at the feed throat of the fire box movable and adjustable throat pieces 90, 90 located at each side of said throat and extending from front to rear of the heater. The said throat pieces are transversely elongated and are hollow so as to be water cooled. They are mounted at their ends, near their upper sides, on pivots which are supported in the front and rear walls of the fire box, whereby the lower sides of said throat pieces may be adjusted toward and away from each other to vary the effective feed opening of the throat, as indicated in full and dotted lines in Fig. 3, they being mounted to swing on pivot studs 91, 92, one of which may constitute a nipple through which water to cool the throat pieces may be delivered thereto or discharged therefrom, as more fully described in my aforesaid parent application. The throat pieces are designed to be held at their lower sides in adjusted positions relatively to each other by holding devices 94, 95, each adapted to extend through one or the other or two or more laterally adjacent openings in the fire box end walls. The holding devices 94 at one end of the heater constitute nipples through which water is fed to or withdrawn from the hollow throat pieces. The adjustable feed throat constitutes, in itself, no part of the present invention and need not be further herein described.

Air is directed upon the upper surface of the fuel bed as it is delivered into the fire box and at the zone where the volatile gases of the fuel are distilled through passages between the outer faces of the throat pieces 90 and the plates 97 arranged at the outer sides and longitudinally, of said throat pieces, the said passages being open at their lower sides, as clearly shown in Fig. 3. Air may be supplied to the rear ends of the said passages 96 through openings 97, 97 in the rear wall of the fire box to which fresh air may be directed by the branches of a Y-shaped fitting 98 which may receive air through the draft opening 99 at the rear end of the furnace, as indicated by the arrow in Fig. 2. Air is supplied to support general combustion through said openings 99 and the passages 100 which lead to the ash pit below the furnace. The supply of air to the fresh air supply passage or flue 100 is controlled by a check valve 102 which is arranged to control the opening 99 and also to control a check draft passage 103 to the smoke box 49, as indicated in Fig. 2. When the valve 102 is raised to the position to cut off the passage of air to the ash pit through the passage 100 cold air passes into the smoke box through the passage 103 check the draft, and thus check down the fire. The said check valve 102, and a damper 104 in the smoke box exit opening are shown as arranged to be simultaneously controlled by a controlling device which constitutes the subject matter of an application for United States Letters Patent, filed by me on the 19th day of May, 1911, Serial Number 628,284 and need not be further herein described.

When the throat pieces are adjusted to their innermost positions toward each other, and the hot air passages behind the same are not employed, the openings 97 may be closed by any suitable removable closure. So also the Y-shaped air supply fitting 98 will be removed, and the opening 105 which affords communication between the air supply passage 100 and said fitting may be closed by the plate 106, shown in dotted lines in Fig. 2.

The rising pipe 118 through which hot water or steam is delivered to the heating system is branched, Figs. 1 and 2, and its branches 109, 109 enter the opposite sides of the steam or water space at the top thereof. The return pipe 110 is likewise branched, with its branches 111 leading to the opposite sides of the water space at the bottom thereof.

In the operation of the heater, coal or other fuel is directed from the magazine 41 to the fire box and is burned on the grate

15, air being supplied to support combustion through the supply passage 99 and the hot air passages 96, if the latter be employed. The heated gases of combustion pass from the fire box or combustion chamber laterally and in opposite directions through the passages 28 to the flues 45, from whence, under normal operation, the heated gases pass forwardly through the flues 45 to the forward ends of the flues 46 and thence to the smoke box 49. As before stated the path of the flue travel may be varied or controlled by removal of one or more of the partition plates 80, and also by the opening of the direct draft damper 51.

Certain of the details described and shown are capable of variation within the scope and spirit of the invention. For instance, one side or half of the boiler, constructed in the general manner described, may be employed with a fire box at one side, and with the same arrangement of the flues and passages leading from the fire box to the smoke box.

I claim as my invention;—

1. In a water heater or like structure, a boiler consisting of two parts arranged at the sides of an intermediate fire box having at its bottom a grate and at its top between the side parts a fuel feed opening, each of said side parts being provided with a pair of flues arranged at a lower level than said fuel feed opening and principally at a lower level than the fire bed on said grate, the flues of each pair having free communication with each other at one end of the heater and a smoke box at the other end of the heater with which one of the flues of each pair has open communication, the boiler being provided abreast the fire box with a series of lateral passages which afford communication between the fire box and the flues which do not communicate directly with the smoke box.

2. In a water heater or like structure, a boiler consisting of two parts arranged at the sides of an intermediate fire box having at its bottom a grate and at its top between the side parts a fuel feed opening, each of said side parts being provided with a pair of flues, arranged at a lower level than said feed opening, the flues of each pair having free communication with each other at one end of the heater and a smoke box at the other end of the heater with which one of the flues of each pair has open communication and normally closed direct draft dampers located between the ends of the other flues and the smoke box, the boiler being provided abreast the fire box and above the pairs of flues with a series of lateral passages which afford communication between the fire box and the flues associated with said direct draft dampers.

3. In a water heater or like structure, a boiler consisting of two parts arranged at the sides of an intermediate fire box, having at its bottom a grate and at its top between its side parts a fuel opening, each of said side parts being provided below the level of said fuel opening with a pair of flues, the flues of each pair having open communication with each other at one end of the heater, a smoke box at the other end of the heater with which one of the flues of each pair has open communication, the boiler being provided abreast of the fire box with a series of lateral passages which afford communication between the fire box and the flues not in open communication with the smoke box, and means affording direct communication at longitudinally spaced points between the flues of each pair to thereby vary the length of the path of travel of the heated gases through the flues.

4. In a water heater or like structure, a boiler consisting of two parts arranged at the sides of an intermediate fire box, each of said boiler parts being provided with a pair of parallel flues separated by a partition, the flues of each pair having open communication with each other at one end of the heater, a smoke box at the other end of the heater with which one of the flues of each pair has open communication, the boiler being provided abreast the fire box with a series of lateral passages which afford communication between the fire box and the flues not in open communication with the smoke box, the partitions between parallel flues being provided with a series of longitudinally spaced openings, and closure plates having means to removably fix them over said openings.

5. In a water heater or like structure, the combination with a boiler and fire box, said boiler being provided with a pair of flues separated by a partition, with means for directing the gases of combustion from the fire box to one of the flues, a smoke box at one end of the heater with which the other flue is in open communication, said flues being in open communication with each other at the other end of the heater, and means affording communication between said flues at longitudinally spaced points to thereby vary the length of the path of travel of the heated gases through the flues.

6. In a water heater or like structure, the combination with a boiler having a fire box, the said boiler being provided with a pair of flues separated by a fixed partition, with means for directing the gases of combustion from the fire box to one of the flues, a smoke box at one end of the heater with which the other flue is in open communication, said flues being in open communication with each other at the other end of the heater, longitudinally spaced openings in said partition and closure plates removably mounted on the partition for closing said openings, the

heater wall being provided with an opening closed by a door through which access may be had to the plates to remove and replace the same.

7. In a water heater or like structure, the combination with a boiler and a fire box, said boiler being provided with a pair of flues separated by a partition, with means for directing the gases of combustion from the fire box to one of the flues, a smoke box at one end of the heater with which the other flue is in open communication, a damper between the smoke box and the flue with which the fire box communicates, said flues being in open communication with each other at the other end of the heater, and means affording communication between said flues at longitudinally spaced points to vary the length of the path of travel of the heated gases through the flues.

In testimony, that I claim the foregoing as my invention I affix my signature in the presence of two witnesses, this 14th day of June, 1912.

CHARLES F. NEWPORT.

Witnesses:
G. E. DOWLE,
W. L. HALL.

Copies of this patent may be obtained for five cents each, by addressing the "Commissioner of Patents, Washington, D. C."