Aug. 23, 1949. C. H. INGWER 2,479,685

ROTARY VANE PUMP

Filed Jan. 17, 1946 2 Sheets-Sheet 1

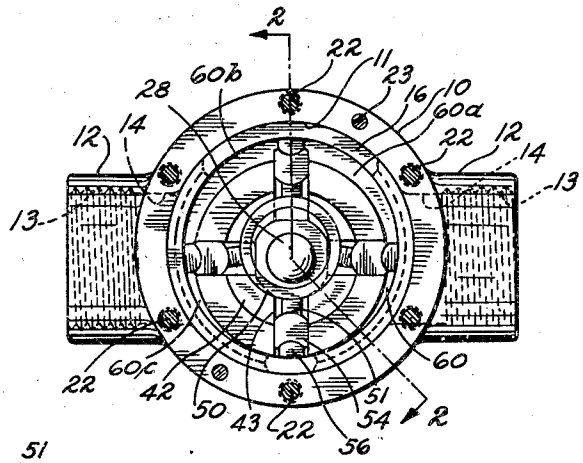

Fig. 1

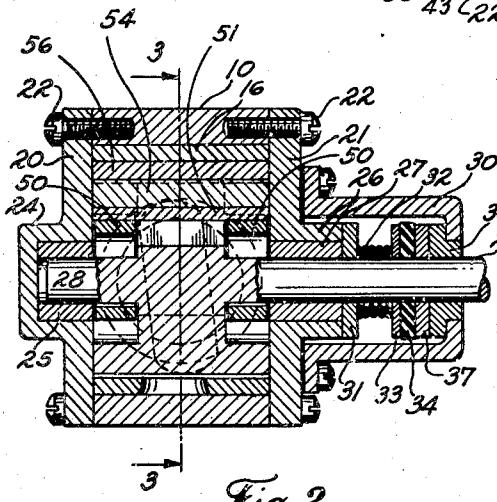

Fig. 2

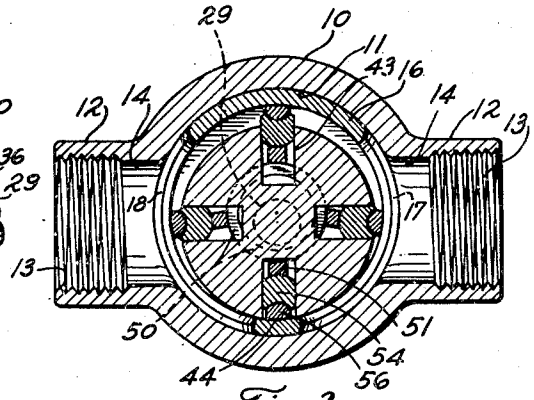

Fig. 3

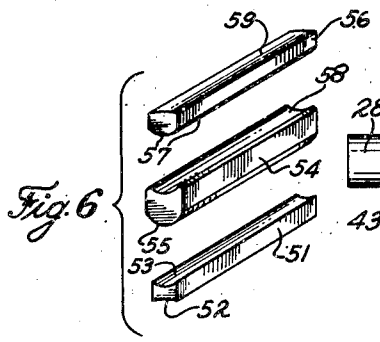

Fig. 6

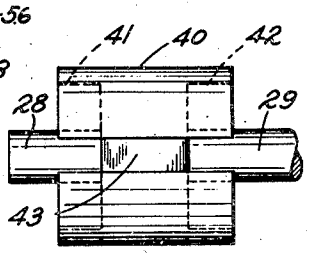

Fig. 5

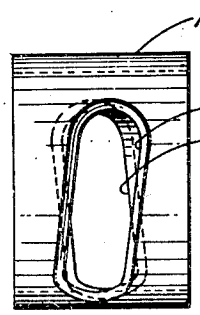

Fig. 4

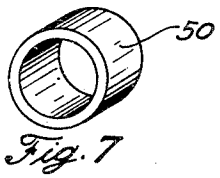

Fig. 7

INVENTOR.
CARL H. INGWER

BY

J. D. Douglas

HIS ATTORNEY

Aug. 23, 1949. C. H. INGWER 2,479,685

ROTARY VANE PUMP

Filed Jan. 17, 1946 2 Sheets-Sheet 2

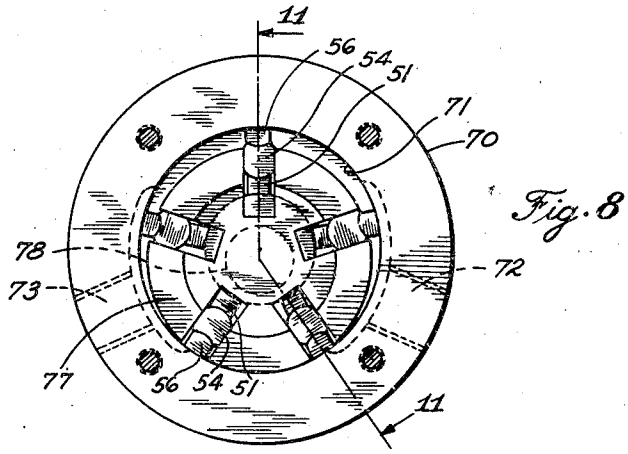

Fig. 8

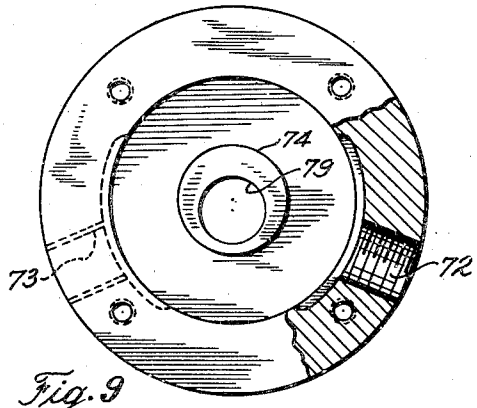

Fig. 9

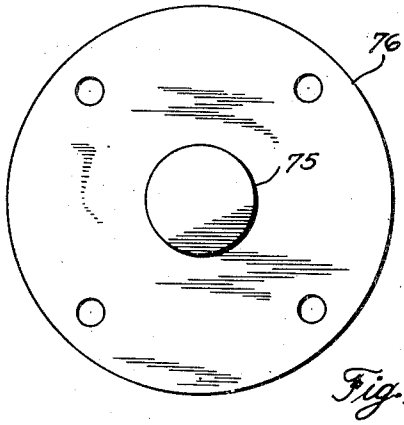

Fig. 10

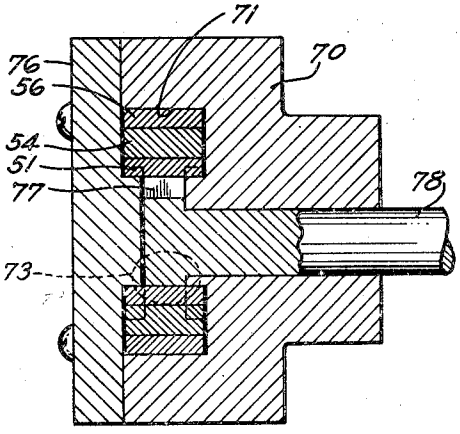

Fig. 11

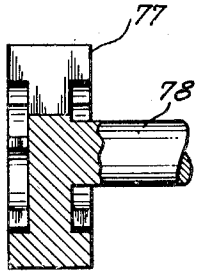

Fig. 12

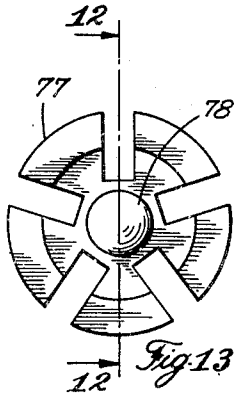

Fig. 13

INVENTOR.
CARL H. INGWER
BY
J. W. Douglas
HIS ATTORNEY

Patented Aug. 23, 1949

2,479,685

UNITED STATES PATENT OFFICE

2,479,685

ROTARY VANE PUMP

Carl H. Ingwer, Elyria, Ohio

Application January 17, 1946, Serial No. 641,744

3 Claims. (Cl. 103—136)

1

This invention relates to pumps, and more particularly to an improved pump of the vane type.

Vane type pumps, wherein a rotor is provided which carries vanes disposed in rotary or sliding engagement in a cylinder, are well known to those versed in the art. These prior pumps, however, had certain disadvantages of which it is the purpose of the present invention to overcome.

One of the problems of manufacture in the prior devices resided in the design of the chamber, which was difficult, because the rotary parts had to be eccentrically mounted, and the chamber, therefore, was not of a true cylindrical form but departed therefrom to accommodate the motion of the vanes. This made the design somewhat expensive and also made it impractical to replace worn parts rendering it necessary to discard the complete apparatus after it became worn.

By my present invention, I have provided a structure which lends itself ideally to manufacture, the operations in connection therewith being simple and relatively inexpensive. What is more important, it is possible in the improved pump of my invention to replace worn parts without detracting from the efficiency of operation. As a matter of fact, a pump after being used for a certain length of time can have certain of the parts replaced and the efficiency of the operation is even greater than that of a new pump.

All of the foregoing, as well as other important aspects of my invention, will more clearly appear from the following description of some embodiments thereof, which description is illustrated by the accompanying drawings and forms a part of this specification.

In the drawings:

Fig. 1 is an elevational view of a pump of my invention with the cover removed;

Fig. 2 is a longitudinal section taken on the line 2—2 of Fig. 1;

Fig. 3 is a transverse section taken on the line 3—3 of Fig. 2;

Fig. 4 is an elevational view of a sleeve which forms the pump cylinder removed from the housing;

Fig. 5 is an elevational view of a rotor spider removed from the housing;

Fig. 6 is an exploded view of one of the composite vanes used in my invention;

Fig. 7 is a view of a thrust ring removed from the assembly;

2

Fig. 8 is a view similar to Fig. 1 of a modified form of my invention;

Fig. 9 is an end elevational view of the housing with interior operating parts removed;

Fig. 10 is an elevational view of the inside face of a cover plate for the device of Fig. 8;

Fig. 11 is a section taken on the line 11—11 of Fig. 8;

Fig. 12 is a sectional view of the rotor spider used in the device of Fig. 8; and

Fig. 13 is an end elevational view thereof.

Briefly, the device includes a housing having a circular chamber therein, a rotor is provided which includes a rotor spider which supports and drives the vanes that extend into engagement with the wall of the housing.

More specifically, the housing includes a body 10, preferably of circular formation which is provided with a cylindrical bore 11 that extends completely through the housing. It will be appreciated that by so constructing the housing the boring operation therefor is exceedingly simple.

The housing is provided with hollow bosses 12 which extend from opposite sides and are internally threaded at 13 to secure conduits not shown. The openings in the bosses extend into the interior of the housing as indicated at 14.

The interior of the housing is provided with a sleeve, Fig. 4, having a press fit with the bore 11. This sleeve is provided with an accurately finished interior surface and has inlet and outlet ports 17 and 18 which extend through the walls thereof in alignment with the openings 14. It will be noted that these ports are not exactly opposite to each other, but that the lower ends of the ports, which are elongated openings, are closer together than the upper ends, as viewed in Fig. 3.

The ends of the housing are closed by a pair of cover plates 20 and 21 held thereon by screws 22. These plates support the rotor, and to that end, the plate 20 is provided with a boss 24 in which a bearing bushing 25 is pressed. It will be noted that the boss 24 and bearing 25 are offset from the center of the housing.

The other plate 21 is likewise provided with a boss 26 which carries the bearing bushing 27 in alignment with the bearing bushing 25.

A fluid seal is provided for the shaft 29 and includes a cup shaped housing 30 secured to the plate 21 and which carries a rotary seal. This seal includes a washer 31 disposed in engagement with the boss 26 and bearing 27 surrounding the shaft and acting as a thrust washer for a helical spring 32, the other end of which engages a

thinner washer 33 also surrounding the shaft. The washer 33 is pressed by the spring 32 against a washer 34 of rubber or similar material which is compressed thereby to engage the surface of the shaft. The end of the housing 30 supports a bushing 36 which is sealed to the housing, a washer 37 being interposed between the bushing and the rubber washer.

This seal may take other forms than the type shown and is merely exemplary of one manner in which the shaft may be sealed against leakage of fluid around it.

The rotor spider comprises a cylindrical body 40, Fig. 5, which may be, but is not necessarily, integral with the shaft. The body is provided with annular recesses 41 and 42 at opposite ends around the shafts and house the thrust rings as will hereafter appear. The spider is also provided with longitudinally extending channels or kerfs 43, of which in the embodiment illustrated there are four. These channels extend diametrically opposite each other and are of considerable depth, as can best be seen from Fig. 3. The ends of the channels intersect the recess 41—42. It will be appreciated that the number of channels in this embodiment may vary from three upwards, depending upon the number of vanes to be used, and that the invention is not limited to the use of only four vanes. Preferably, the diameter of the rotor spider is such that the periphery is tangent to the wall of the sleeve 16 between the ports 17—18 as indicated at 44, Fig. 3. It will be seen that the rotor is symmetrical, but is mounted off center to the chamber defined by the sleeve 16, the periphery of the rotor being farthest from the chamber wall diametrically opposite to the point 44.

The rotor is adapted to support and drive the composite vanes which are carried in the channels 43. To this end, there are provided two rings 50 which are disposed in floating relation, one each, in the recesses 41 and 42. Next to these rings, which I will hereinafter term thrust rings, and disposed in the lower end of the channels 43 are thrust ring engaging bars 51. These bars are considerably narrower than the channels which house them to allow for free lateral movement therein and are provided with thrust ring engaging faces 52 and drive bar engaging faces 53. The faces 52 are concave and complementary to the surface of the ring; the faces 53 are also concave and have the same radius as the drive bar faces with which they engage. The drive bars 54 are also disposed in the channels 43, and are of a width to provide a close sliding fit with the channels. The sides 55 of the bars adjacent the thrust bars 51 are convex being complementary to the faces 53. The radii of the thrust bar faces are such that they always maintain a full bearing contact with the rings 50 during operation as can best be seen in Figs. 1 and 3.

Finally, there are the wiper bars 56 which are engaged and driven by the drive bars, the wiper bars being provided with convex faces 57 which seat in concave faces 58 of the drive bars. The wiper bars are also provided with convex faces 59 of the same curvature as the interior of the sleeve 16.

In the operation of the device, the spider rotates the composite vanes with the wiper bars in constant engagement with the chamber wall. The spider drives the vanes by engagement with the drive bars 54. The drive bars in turn carry the wiper bars 56 which are held in engagement with the chamber wall by the ring 50 and the thrust bar 51. It will appear, therefore, that although the radial position of the wiper bar may change, the relative movement of the drive bars in the rotor spider is radial only. This is clearly depicted in Figs. 1 and 3; here the vanes midway between the inlet and outlet ports all have their radial center lines in alignment. The vanes opposite to the inlet and outlet ports may take a position substantially as shown.

The ends of the vane parts extend into close sliding engagement with the cover plates 20 and 21. The drive bar 54 and wiper bar 56 together with the rotor spider 40 and the cylindrical wall of the sleeve 16 together with the end walls 20—21 define the expansible and contractible chamber whereby the fluid is drawn into and expelled from the housing. The vane parts are always maintained in seating engagement with the housing wall by the thrust ring 50 and its associated bar 51, this bar having a floating engagement between the ring and the drive bar. Likewise, the wiper bar always maintains its seal against the housing wall since it is free to rotate on its seat on the drive bar.

The direction of rotation of the mechanism determines whether the port 17 or 18 is the inlet port. Assuming the rotation is to be counter clockwise in Figs. 1 and 3, it will be seen that the space 60 opposite to the lower end of the inlet port is expanding and continues to grow larger as indicated at 60*a* until the vane passes beyond the inlet port, after which it starts to grow smaller as indicated at 60*b*. The fluid is, therefore, drawn into the casing in positions 60 and 60*a* and forced out of the casing through the outlet port 18 in positions 60*b* and 60*c*. It will be appreciated that if more vanes are provided, there is less pulsation to the fluid. With four vanes, however, there is but a slight pulsation thereof.

The seat of the wiper bar on the chamber wall provides a large area of contact which affords a more perfect seating engagement therewith and also distributes the wear more evenly. Because the seat has a full and continuous contact, the wear is even and conducive of long life. Likewise, the engagement of the driver bar 54 with the rotor includes a large bearing surface which also provides a more effective seal and less tendency to wear.

Because the vane is formed in the composite manner shown, the interior of the chamber may be a perfect circle which simplifies the manufacture to a considerable extent. This is also true of the rotor which can be formed with its surfaces concentric to the drive shaft. Furthermore, the seat faces of the vane parts are all formed on the radius of a circle, and the thrust ring 50 likewise is circular. The only place where there is a departure from concentricity is in the location of the bearings for the rotor shaft. The location of these bearings is also a simple operation.

A distinct advantage of this structure lies in the fact that if and when the parts wear, they may be easily replaced. It is of particular note that upon wear of the vanes, it may only be necessary to replace the ring 50 with a new ring and which may be oversize. This is particularly desirable because the wiper blade, during operation, gradually wears itself into provide a more effective seal against the chamber wall. Therefore, by merely replacing the ring, this seal is not disturbed. Furthermore, it is considerably

cheaper and quicker to replace the rings than the vane parts, and a plurality of different rings of various degrees of oversize may be stocked for repair or replacement. Likewise, the drive bar may be replaced if necessary by oversize drive bars and still not disturb the seat of the wiper blade. This replacement problem becomes particularly acute where the materials being pumped are of a slightly gritty or abrasive nature.

In Figs. 8 to 13 inclusive, I have shown another embodiment of my invention. Therein, I have depicted a pump using five vanes and a somewhat simplified, and possibly cheaper, construction.

In this instance, a housing 70 is provided having a circular bore 71. Inlet port 72 and outlet port 73 are provided corresponding to those previously described. In this case, the rings 50 are replaced by circular bosses 74 and 75 disposed on the interior of the housing and the cover plate 76 respectively. These bosses may be secured to the housing wall to prevent movement thereof.

A rotor spider is provided and includes the head 77 from which the shaft 78 extends, the shaft being rotatably journalled in the opening 79 disposed off center in the boss 74.

The thrust bars 51, drive bars 54, and wiper bars 56 are substantially the same as described for the preceding embodiment, except that in this case, they are considerably shorter.

The operation of this device is the same as described in the preceding embodiment. In event of wear, in this embodiment, it is more convenient to replace the bars 51.

It will also be appreciated that the portion of the housing including the bore could be made separate, if desired, as in the preceding embodiment. In the event that the bosses 74 and 75 are integral with the end plates, these plates could be removed and replaced with plates having enlarged or oversized bosses when wear occurs.

Making the bosses 74—75 integral with the end walls or plates allows the apparatus to be made using any desired number of vanes from one upward. The number of vanes being limited only by the size of the pump and the thickness of the vanes.

It will thus be seen that I have provided an improved vane type pump wherein expensive and complicated machining operations are completely eliminated with a resultant increase in economy of manufacture, and that by supplying a few simple oversize parts the life of the device may be extended materially.

Having thus described my invention, I am aware that numerous and extensive departures may be made therefrom without departing from the spirit or scope of the invention.

I claim:

1. A pump including a housing, a circular cylinder formed in said housing and a circular sleeve disposed in said housing to provide a circular cylindrical chamber therein, inlet and outlet ports for said housing, cover plates for the ends of said housing, and a rotor for said housing including a circular rotor body and a concentric shaft therefor eccentrically journalled in said cover plate, said rotor being formed with annular recesses surrounding said shafts and radial kerfs extending longitudinally thereof, vane means for cooperative engagement with said rotor and said chamber including a wiper portion having a substantial seating surface seated against the wall

of said cylindrical chamber, drive portions for carrying said wiper portions disposed in driving engagement with the walls of said kerfs and each provided with an arcuate seat for said wiper portions, said wiper portions being slidable therein, thrust means for said vanes including ring members floatingly disposed in said recesses and thrust bars having complementary curved faces for engaging said ring member and a curved face on said drive portions, and being narrower than said kerf to permit relative lateral movement in said kerfs.

2. A pump including a housing, a circular cylinder formed in said housing, inlet and outlet ports for said housing, cover plates for the ends of said housing, and a rotor for said housing including a circular rotor body and a concentric shaft therefor eccentrically journalled in said cover plates, said rotor being formed with annular recesses surrounding said shafts and radial kerfs extending longitudinally thereof, vane means for cooperative engagement with said rotor and said cylinder including a wiper portion having a convex seating surface seated against the wall of said cylinder, drive portions for carrying said wiper portions disposed in driving engagement with the walls of said kerfs and provided with a concave seat for said wiper portions and a convex face opposite thereto, said wiper portions being formed with a convex portion slidably seated on said drive portions, thrust means for said vanes including ring members floatingly disposed in said recesses and thrust bars each having a concave curved face for engagement with said drive portion, said kerfs formed to permit relative lateral movement of said thrust members in said kerfs.

3. A pump including a housing, a circular cylinder formed in said housing, inlet and outlet ports for said housing, cover plates for the ends of said housing, and a rotor for said housing including a circular rotor body and a concentric shaft therefor eccentrically journalled in said cover plates, said rotor being formed with annular recesses surrounding said shafts and radial kerfs extending longitudinally thereof, vane means for cooperative engagement with said rotor and said cylinder including a drive portion slidably disposed in said kerf and in engagement with the walls thereof, a wiper portion having a convex seating surface seated against the wall of said cylinder, and a convex portion for seating on a concave seat on said drive portion, thrust means for the drive and wiper portion including ring members floatingly disposed in said recesses and narrow thrust bars each having a concave curved face for engagement with said drive portion, said kerfs being wider than said thrust bars to permit relative lateral movement of said thrust members in said kerfs over said ring and said drive portion.

CARL H. INGWER.

REFERENCES CITED

The following references are of record in the file of this patent:

UNITED STATES PATENTS

Number	Name	Date
1,964,492	Yandell	June 26, 1934
2,044,873	Beust	June 23, 1936
2,049,092	Sturm	July 28, 1936
2,366,765	Anderson	Jan. 9, 1945