(No Model.)

C. L. DIFFENDERFER.

LIFTING JACK.

No. 590,969. Patented Oct. 5, 1897.

Fig. 2.

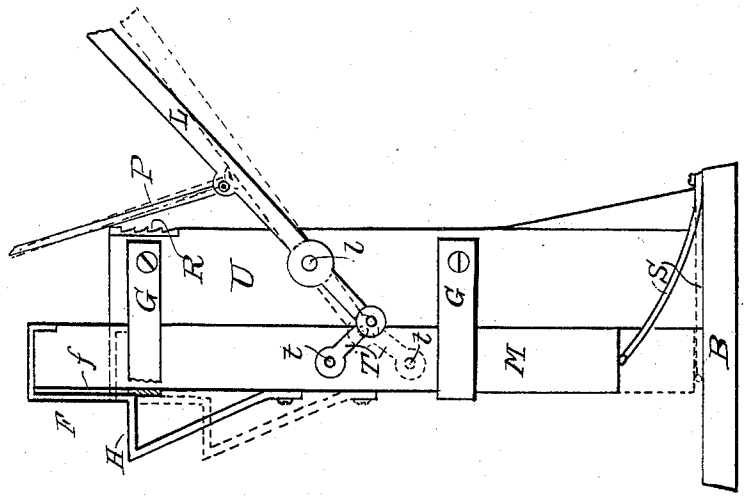

Fig. 3.

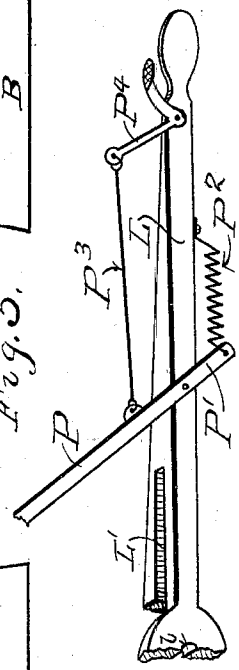

Fig. 1.

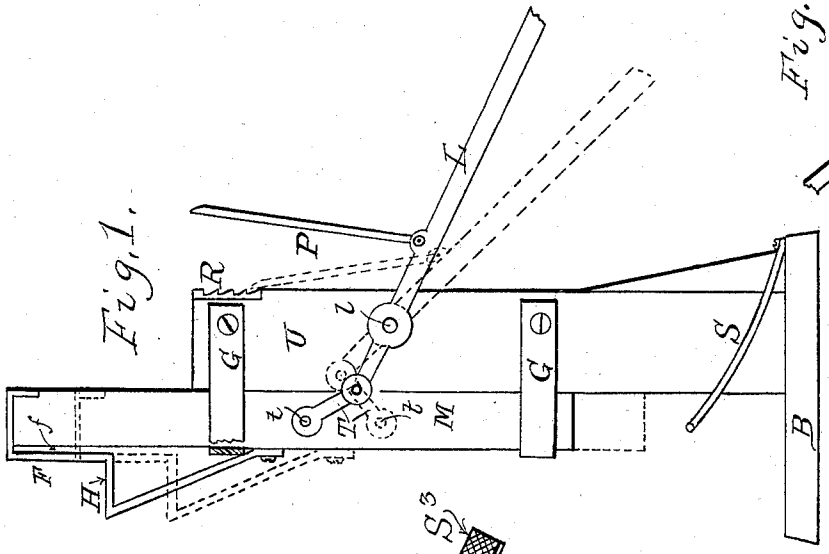

Fig. 4.

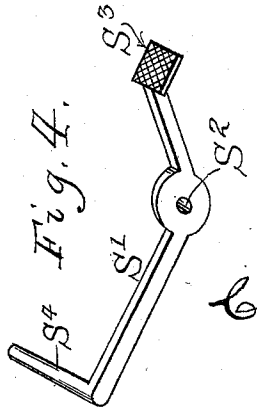

Witnesses:
Mark Marcy.
J. A. Jochum Jr.

Inventor:
Charles L. Diffenderfer,
by Collamer & Co.,
Attorneys.

THE NORRIS PETERS CO., PHOTO-LITHO., WASHINGTON, D. C.

UNITED STATES PATENT OFFICE.

CHARLES L. DIFFENDERFER, OF LEWISTOWN, PENNSYLVANIA, ASSIGNOR OF ONE-HALF TO DAVID Z. DETWEILER, OF BELLEVILLE, PENNSYLVANIA.

LIFTING-JACK.

SPECIFICATION forming part of Letters Patent No. 590,969, dated October 5, 1897.

Application filed May 26, 1897. Serial No. 638,201. (No model.)

To all whom it may concern:

Be it known that I, CHARLES L. DIFFENDERFER, a citizen of the United States, and a resident of Lewistown, Mifflin county, State of Pennsylvania, have invented certain new and useful Improvements in Lifting-Jacks; and my preferred manner of carrying out the invention is set forth in the following full, clear, and exact description, terminating with claims particularly specifying the novelty.

This invention relates to lifting-jacks, and more especially to that class thereof employing a lever; and the object of the same is to produce a device of this character capable of being readily adapted to axles or objects of different heights.

To this end the invention consists in the details hereinafter more fully described and claimed, and as illustrated in the accompanying drawings, wherein—

Figure 1 is a side elevation of this improved jack, with its lifting member in full lines in its highest position and in dotted lines in the next lower position. Fig. 2 is a similar view with the lifting member in full lines in its third position and the lever raised to its highest point and in dotted lines with the lifting member in its fourth or lowest position and the toggle-joint as just above a straight line between its extremes. Fig. 3 is a detail of the main lever, showing slight modifications. Fig. 4 is a detail of a foot-lever which may be used in the place of the spring raising device, if desired.

In the said drawings the letter B designates a base, upon which is supported an upright U, carrying guides G, in which moves the lifting member M, the latter carrying at its upper end and on the edge remote from the upright a foot F, as of stout strap-iron or similar material. This foot is secured at its lower end to the outer edge or the member M, whence it extends, preferably, obliquely outward, then inward to form one or more horizontal portions or steps H, capable of being passed under the axle or other article to be raised, thence upward, as at F, parallel to but slightly remote from the outer face of the member M, so as to leave a slot *f*, in which the upper guide G works, and finally inward in another horizontal portion across the top of the member M.

The lifting mechanism consists of a lever L, having a fork pivoted at *l* to the upright U, and to the body or handle of this lever is pivoted a pawl P, adapted to engage a ratchet R, carried by the upright near the upper end of its rear edge. This mechanism also comprises a link T at each side of the upright, pivoted to the inner end of the fork and to the member M, as at *t*. In addition a spring raising device S of any suitable shape is located beneath the member M to cause it to rise when the position of other parts is such as to permit that movement.

All parts of this improved jack are of the desired proportions, shapes, and materials, and also of the preferred sizes with the following necessary limitations: The jack stands normally as seen in Fig. 1 in dotted lines. When it is desired to lift an axle or other object, the jack is brought into place to do the work and the handle end of the lever is raised until one of the horizontal portions of the foot passes under the axle. Owing to the height of the upright portion F of the foot no horizontal portion may just come beneath the axle at any point during the movement of the lever from the position of Fig. 1, dotted, to that in Fig. 2, dotted, and, if so, the operator has but to continue to raise the handle and depress the member-raising device. As the pivot of the toggle passes beyond a straight line between *l* and *t*, the position of parts is automatically changed from that in Fig. 2, dotted, to that in Fig. 2, full lines, under the upward influence of the spring raising device, and thereafter a downward movement of the handle carries the lifting member M upward again to and considerably above the original point of starting, because the link T of the toggle is now at an upward incline. The length of both toggle-links is such, compared with the height of the foot between its horizontal portions, that one of the latter will, in this new position of the toggle, move through a space including the under line of the axle, and the latter can therefore be lifted. It will be obvious that when the load has been lifted, whatever the position of the link T, the tip of the pawl P can be engaged with the ratchet R to hold it in such position, or, in full lines in Fig. 1, where the toggle-pivot has passed a

straight line between its ends, the weight will be automatically supported without using the pawl.

In Fig. 3 is shown the main lever L with its fork L′, that spans the upright U; but the pawl P herein is continued, as at P′, beneath its pivotal point with the lever, and a spring P^2 is employed for retracting the lower end, and hence throwing the upper end normally into engagement with the teeth R. I preferably also employ in this connection a fine rod or wire P^3, leading from the pawl above its pivot to and connected with the upper arm of an L-shaped thumb-lever P^4, whose angle is pivoted, as seen, to the lever L near its handle and whose other extremity stands in position to be depressed by the operator's thumb. The obvious purpose of this arrangement is to withdraw the tip of the pawl from the teeth R, as will be clear.

In Fig. 4 is shown a pivoted member-raising device in the shape of a foot-lever S′, having an elbow S^4 at one end, a foot-piece S^3 at the other, and an eye between them, as at S^2, and this lever may be substituted for the spring S. Hence I desire to be understood where using the words "raising device" herein as covering either the spring S or the lever S′. It will be obvious, however, that when the lever is employed the operator must depress its foot-piece when he desires the member M to rise, whereas with the spring this movement is automatic. One construction possesses advantages not gained by the other, and the other in turn has its advantages over the first. I therefore leave to the user the selection. The eye is pivoted to one side of the upright with the foot-piece in rear thereof, and the elbow turns in in front of this upright under the lifting member, as will be clear.

What is claimed as new is—

1. In a lifting-jack, the combination with the upright having strap-guides, the lifting member moving in said guides, and a lever for raising said member; of a foot of strap-iron secured at its lower end to the outer edge of the lifting member, leading thence outward, thence inward to form a horizontal step, thence upward but slightly remote from the outer edge of said member so as to leave a slot for the guide, and finally passing over the upper end of this member to form a top horizontal portion and secured thereto, substantially as described.

2. In a lifting-jack, the combination with an upright, a lever having a forked end pivoted astride the upright, and links pivoted to the extremities of the forks; of a lifting member moving alongside the upright and to which the other ends of the links are pivoted, and a foot carried by this member and having horizontal portions with an interposed upright portion, the latter being of a height less than the throw of the lever, as and for the purpose set forth.

3. In a lifting-jack, the combination with an upright, a lever pivoted thereto between its ends, and a link pivoted at one extremity to its inner end; of a lifting member pivoted to the other extremity of the link so that the latter forms one member of a toggle, a raising device for raising said member, and a foot secured to the latter and having horizontal portions with an interposed upright portion of a height less than the throw of the toggle-lever, as and for the purpose set forth.

4. In a lifting-jack, the combination with an upright, a ratchet carried by its rear edge, a lever pivoted between its ends to the upright, and a pawl pivoted to the lever and adapted to engage the ratchet; of a lifting member, a link pivotally connecting the inner end of the lever with this member and forming a toggle with arms of a length to pass a straight line when the lifting member is at either extreme position, means for normally raising said member, and a foot carried by the latter and having horizontal portions with an upright portion of less height than the throw of the lever, as and for the purpose set forth.

5. In a lifting-jack, the combination with an upright, a ratchet on its rear edge, a lever pivoted between its ends to the upright, a lifting member, and a link pivotally connecting the inner end of the lever with said member; of a pawl pivoted between its ends to the lever, a spring attached to its lower end and throwing the upper end normally toward said ratchet, an L-shaped thumb-lever pivoted at its angle to the main lever adjacent the latter's handle, and a rod connecting the upright arm of the thumb-lever with the pawl above its pivot, as and for the purpose set forth.

In testimony whereof I have hereunto subscribed my signature on this the 20th day of March, A. D. 1897.

CHARLES L. DIFFENDERFER.

Witnesses:
J. C. HAZLETT,
ALBERT C. GIFFIN.