J. MacGREGOR.

CONCENTRATION OF SYRUPY LIQUIDS.

APPLICATION FILED JULY 29, 1911.

1,068,789.

Patented July 29, 1913.

2 SHEETS—SHEET 1.

*Fig. 1.*

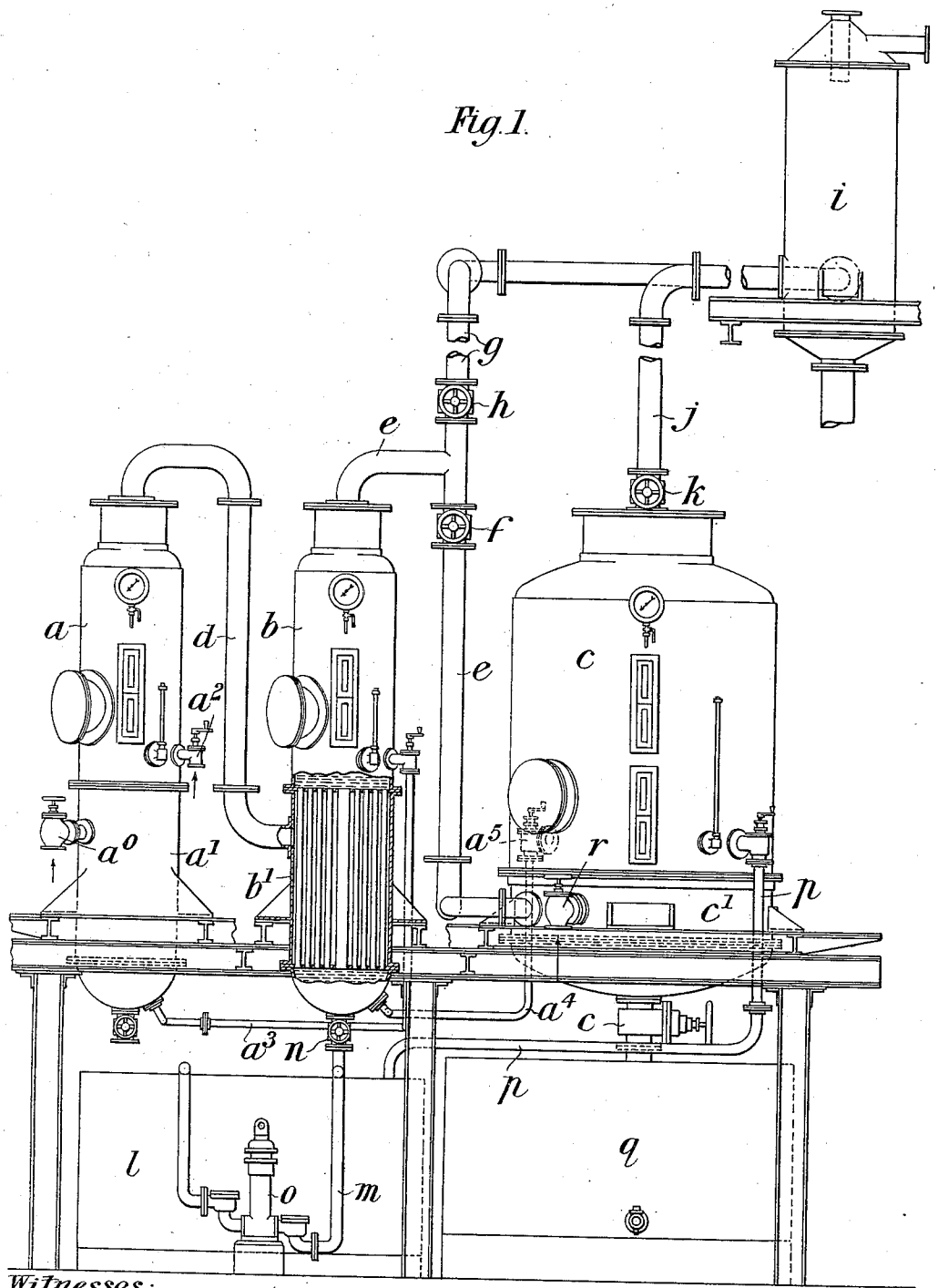


*Witnesses:*
J. K. Moore
R. E. Barry.

*Inventor:*
James MacGregor
By Whittaker Prevost Attys.

COLUMBIA PLANOGRAPH CO., WASHINGTON, D. C.

J. MacGREGOR.

CONCENTRATION OF SYRUPY LIQUIDS.

APPLICATION FILED JULY 29, 1911.

1,068,789.

Patented July 29, 1913.

2 SHEETS—SHEET 2.

Fig. 2.

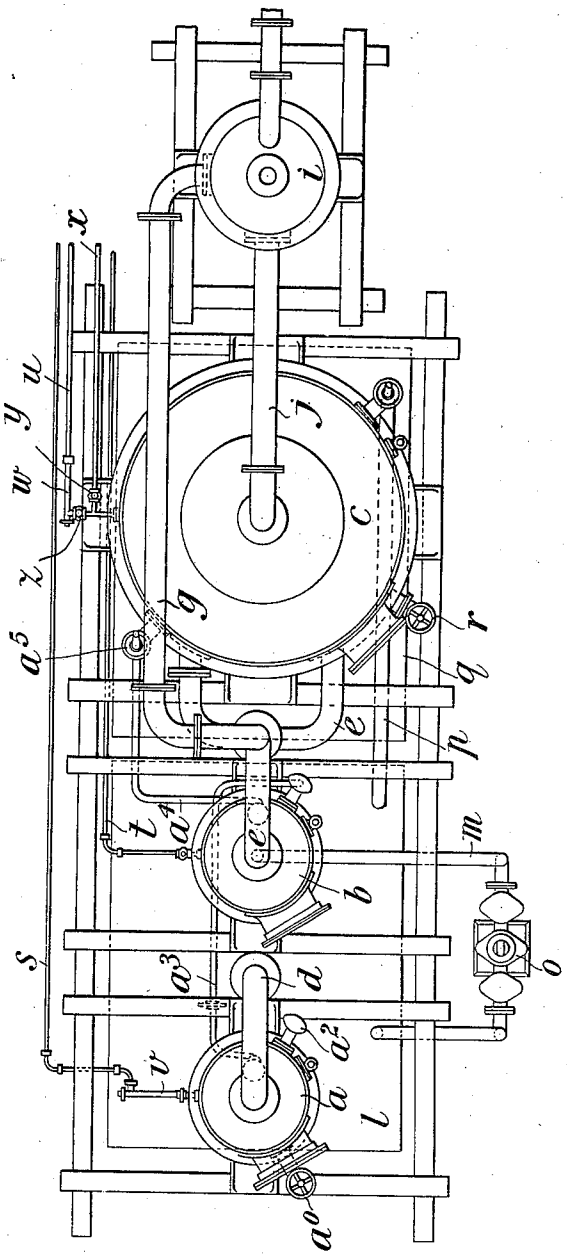


Witnesses:

J. K. Moore

R. E. Barry.

Inventor:

James Mac Gregor

By Whittemore Howson attys.

COLUMBIA PLANOGRAPH CO., WASHINGTON, D. C.

# UNITED STATES PATENT OFFICE.

JAMES MacGREGOR, OF GLASGOW, SCOTLAND.

## CONCENTRATION OF SYRUPY LIQUIDS.

1,068,789. Specification of Letters Patent. Patented July 29, 1913.

Application filed July 29, 1911. Serial No. 641,369.

*To all whom it may concern:*

Be it known that I, JAMES MacGREGOR, a subject of the King of Great Britain, residing at 19 Waterloo street, Glasgow, Scotland, have invented new and useful Improvements in the Concentration of Syrupy Liquids, of which the following is a specification.

This invention relates to the concentration of liquids chiefly those of a syrupy nature.

According to the methods mostly in vogue for the concentration of syrup and heavy viscous liquids the liquid is concentrated from its weak state to its finished density in one operation; or the weak liquid is partially concentrated in a multiple effect apparatus, withdrawn by means of suitable pumps and thereafter raised to its finished density in the usual coil pan, the coils in such pans being supplied direct from a steam main.

Under such arrangements as the above, which represent the universal methods, the coil pans are of large capacity, (the intention being to produce large batches) owing to the desired finished density having to be maintained constantly. These methods have had to be adopted because of the impossibility of rendering the operation continuous when constantly withdrawing the finished product at a fixed density.

The object of my invention is to provide for effecting the concentration in practically one continuous operation and to this end I proceed as follows, that is to say, I concentrate the weak liquor in a multiple effect and complete the concentration in a final or finishing pan, this last operation being effected by means of the vapors from the preceding effect and being continued until a full pan of finished syrup is obtained or a smaller charge as desired, means being provided for cutting out the finishing pan when it is desired to draw off the charge therefrom, without interfering with the working of the preceding effect.

In the accompanying drawings Figure 1 is a sectional elevation of apparatus constructed for carrying out my invention, and Fig. 2 is a plan view thereof.

*a*, *b* represent two effects arranged to work in series, as a multiple effect, the said effect being of any desired capacity consistent with the work to be carried out.

*c* is the finishing pan or effect which is of large capacity as compared with the vessels *a* and *b*.

The liquor in the vessel *a* is heated by steam passed through the valve $a^6$ into the heating section $a^1$ of the said vessel the vapor from the said liquor passing through the pipe *d* into the heating section $b^1$ of the vessel *b* and serving to heat the liquor in the said vessel and the vapors from the latter vessel *b* passing through the pipe *e* into the heating section $c^1$ of the finishing pan or vessel *c*. The pipe *e* is fitted with a valve *f* for a purpose hereinafter described. The branch *g* from the pipe *e*, which branch is controlled by the valve *h*, extends to the condensing vessel *i*, with which the finishing pan or vessel *c* is also in communication by the pipe *j* controlled by the valve *k*.

$a^2$ is the inlet to the vessel *a* for the liquid to be concentrated and $a^3$ and $a^4$ are the pipes for the passage of the said liquid from the vessel *a* to the vessel *b* and from the latter to the vessel *c* respectively the pipe $a^4$ having a controlling valve $a^5$.

*l* is an intermediate tank which is in communication by the pipe *m* with the second vessel *b*, the said pipe *m* being fitted with a controlling valve *n* and with the pump *o*, the said tank only being used while the vessel *c* is being discharged to receive the partly concentrated liquid from the vessel *b* in the event of the latter and the vessel *a* not having sufficient capacity for the liquid forced in through the inlet $a^2$. The intermediate tank is also in communication by means of the pipe *p* with the finishing vessel or effect *c*, which is fitted with the outlet valve $c^1$ for discharging into the tank *q*.

In the finishing pan *c* the heating surface is of relatively small area compared with the holding capacity of this vessel, and the heating surface provided will be in the form of tubes expanded into tube plates, considerably shorter than the tubes in the preceding weak liquor effects *a* and *b*. The tubes in the finishing pan may also be of somewhat greater diameter than in the preceding effects, these modifications being made, if required, to provide for the viscous nature of the syrup in the finished state.

The apparatus operates as follows, that is to say, assuming that it has been in operation such that the liquid in its passage from the vessel *a*, through the vessel *b* and into

the finishing vessel $c$ has acquired the desired density, the said vessel $c$ is cut out by means of the valves $a^5$ $f$ and $k$, so that its contents can be discharged through the outlet valve $c^2$ into the tank $q$. This discharge can take place without interfering with the operation of the effects $a$ and $b$, since the valve $h$ can be operated so as to bring the effect $b$ into communication with the condenser $i$. While the batch of finished syrup or other liquid is thus being discharged from the finishing pan $c$, the liquor, which passes continuously into the multiple effect apparatus, may either accumulate in the effects $a$ and $b$ which may have a margin of capacity provided for the purpose, or if they have not such capacity may be discharged through the valve $n$ and pipe $m$ by means of the pump $o$ into the intermediate tank $l$, in which it is stored until the finishing pan $c$ is empty and ready to be brought into operation again. When this condition is attained, the finishing pan $c$ is again connected up to form a part of the multiple effect apparatus, for which purpose the valve $h$ is turned so as to cut off the vessels $a$ and $b$ from the condenser $i$ and the valves $a^5$ $f$ and $k$ again opened so as to connect the said vessels with the finishing pan $c$ and the latter with the condenser $i$, any partially concentrated liquid which may have been accumulated in the intermediate tank $l$ being at the same time quickly fed into the finishing pan $c$ under the pressure of the atmosphere which reigns in the tank $l$.

In some cases it may be necessary to adjust the degree of density of the liquor in the pan $c$ by the use of direct steam, this being supplied through a valve $r$.

$s$, $t$ and $u$ are pipes for the discharge of the water of condensation from the heating section $a^1$, $b^1$, $c^1$ of the vessels $a$, $b$ and $c$, the pipes $s$ and $u$ being provided with steam traps $v$, $w$, respectively, to prevent the passage of steam through the said pipes admitted through the valves $a^9$ and $r$. When, however the vessel $c$ is working as the third effect of the apparatus, the heating section $c^1$ being heated by the vapor from the vessel $b$ through the pipe $e$ is connected to the condenser $i$ by a pipe $x$ controlled by a valve $y$, a valve $z$ being arranged to cut out the steam trap $w$.

By my invention I secure for all practical purposes a continuously working apparatus, and as the concentration is carried out in multiple effect, a saving in coal is effected without any disadvantages. In addition to the saving in fuel the final concentration is effected in a high vacuum by means of the distended vapors from the preceding pan thus securing the great advantage of a very low temperature during the finishing stages.

Claims:

1. A process for the continuous concentration of syrupy liquids, consisting in first partially concentrating the weak liquor in a multiple effect, and then completing the concentration in a pan or vessel by the vapors from the preceding effect, and in cutting off the finishing vessel from the preceding effect and discharging its contents without interfering with the working of the said preceding effect, substantially as hereinbefore described.

2. A process for the continuous concentration of syrupy liquids which consists in continuously partially concentrating the weak liquor in a preliminary effect, and passing it to a separate finishing effect for final concentration to the required density, effecting such final concentration as a part of the continuous process, then discontinuing the final concentration and discharging the finished product and discontinuing the passage of partially concentrated liquor to the finishing effect without stopping the continuous concentration in the preliminary effect.

3. A process for the continuous concentration of syrupy liquids which consists in continuously partially concentrating the weak liquor in a preliminary effect and passing it to a separate finishing effect for final concentration to the required density, effecting such final concentration as a part of the continuous process, then discontinuing the final concentration, discharging the finished product and temporarily discontinuing the passage of partially concentrated liquor to the finishing effect without stopping the continuous concentration in the preliminary effect, accumulating the partially concentrated liquor, reëstablishing the passage of partially concentrated liquor to the finishing effect after the discharge of the finished product, and withdrawing the accumulated partially concentrated liquor thereto and again effecting the final concentration as a part of the continuous process.

4. A process for the continuous concentration of syrupy liquids which consists in continuously partially concentrating the weak liquor in a preliminary effect and passing it to a separate finishing for a final concentration, completing the concentration to the required density in said finishing effect by the vapors from the preliminary effect, temporarily cutting off the finishing effect and discharging its contents without interfering with the continuous operation of the preliminary effect.

5. A process for the continuous concentration of syrupy liquids which consists in continuously partially concentrating the weak liquor in a preliminary effect and passing it to a finishing effect, completing the concentration in said finishing effect by the vapors from the preceding effect, cutting off the finishing effect from the preceding effect

and discharging its contents without interfering with the continuous operation of the preliminary effect, temporarily condensing the vapors from the preliminary effect while disconnected from the finished effect, accumulating the partially concentrated liquor, reëstablishing the connection of the finishing effect with the preliminary effect and discontinuing the said condensation of vapors from the preceding effect.

JAMES MACGREGOR.

Witnesses:
NELLIE MCFARLANE LYNCH,
JOHN PUNGLE.

Copies of this patent may be obtained for five cents each, by addressing the "Commissioner of Patents, Washington, D. C."