Jan. 1, 1963 T. C. HART 3,070,986

LOCK-TYPE KEEPER MECHANISM FOR A SLIDE FASTENER

Filed May 15, 1961 2 Sheets-Sheet 1

Fig. 1.

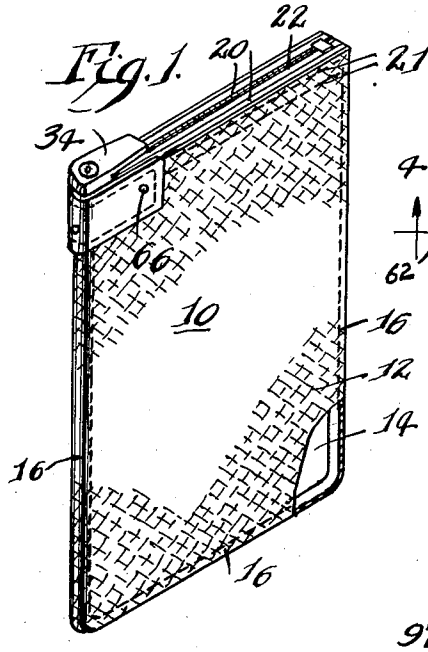

Fig. 2.

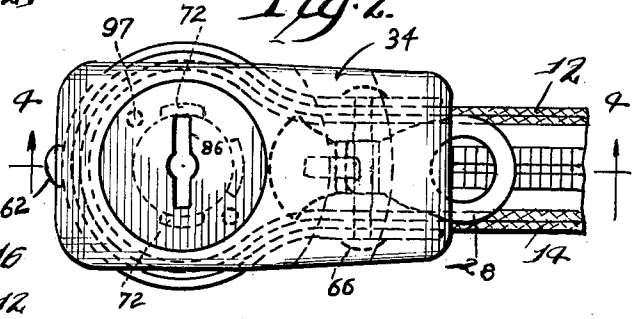

Fig. 3.

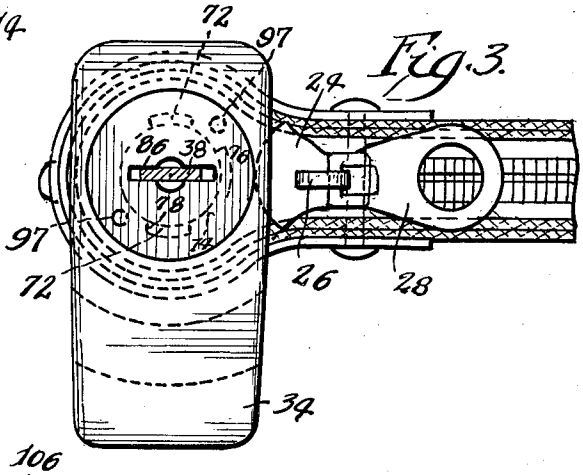

Fig. 4.

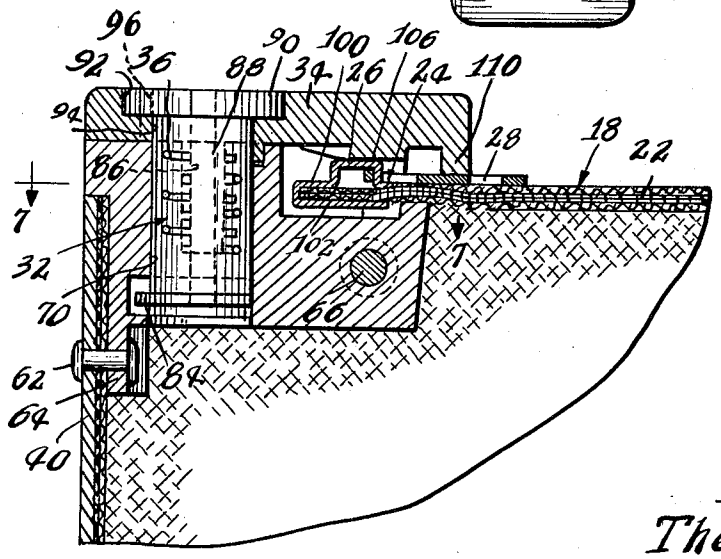

Inventor.
Thearl C. Hart
By. Norman H. Gerlach
Attorney.

Jan. 1, 1963 T. C. HART 3,070,986

LOCK-TYPE KEEPER MECHANISM FOR A SLIDE FASTENER

Filed May 15, 1961 2 Sheets-Sheet 2

Fig. 5.

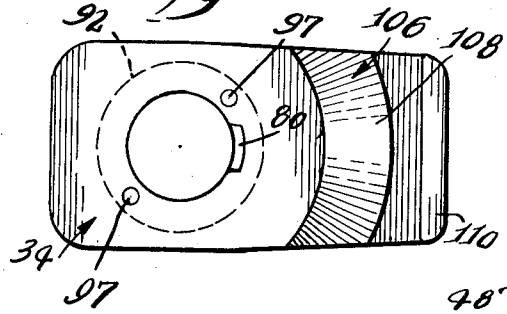

Fig. 9.

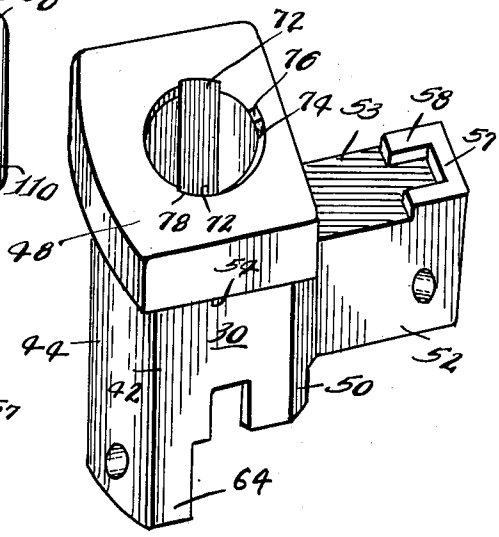

Fig. 6.

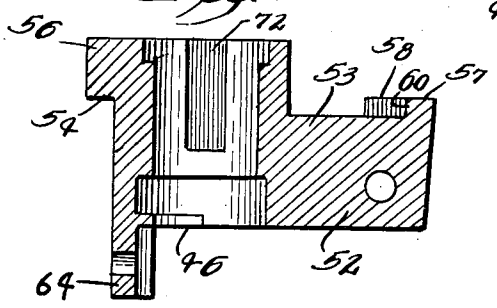

Fig. 10.

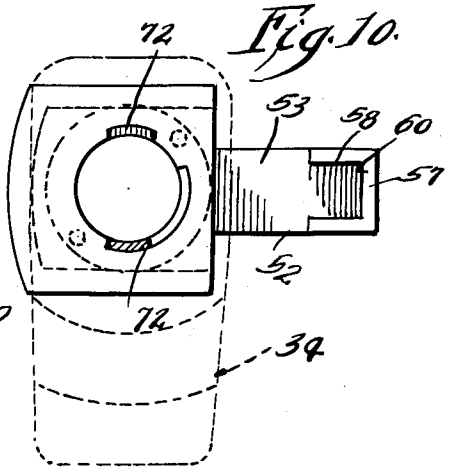

Fig. 7.

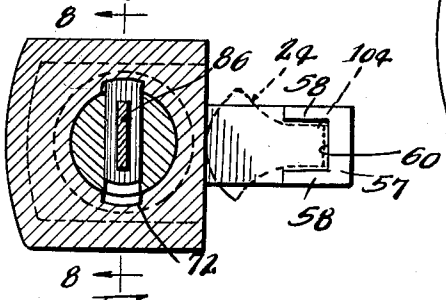

Fig. 8.

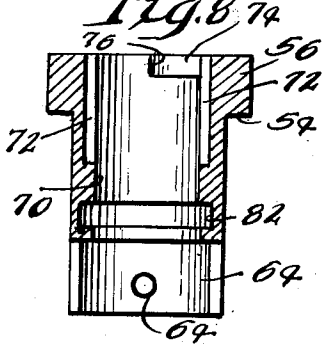

Inventor.
Theard C. Hart
By. Norman Siegel
Attorney.

United States Patent Office 3,070,986 Patented Jan. 1, 1963

3,070,986

LOCK-TYPE KEEPER MECHANISM FOR A SLIDE FASTENER

Thearl C. Hart, Chicago, Ill., assignor to Chicago Lock Company, Chicago, Ill., a corporation of Illinois

Filed May 15, 1961, Ser. No. 109,969
3 Claims. (Cl. 70—58)

The improved keeper mechanism comprising the present invention has been designed for use primarily in connection with slide fasteners on canvas, duck, and similar cloth containers such as coin bags, duffel bags, golf bags, tent flaps, tarpaulin covers, and the like, the mechanism being so constructed that, when it is in its locked or operative position, it will prevent access to the pull tab by means of which the slide fastener with which the mechanism is associated is manipulated. The invention is, however, capable of other uses and a keeper mechanism constructed in accordance with the principles of the present invention may be employed for preventing access to the pull tab of a slide fastener regardless of the particular use to which the slide fastener may be put. Irrespective, however, of the specific environment in which the present keep mechanism may be used, the essential features of the invention are at all times preserved.

Access prevention devices or mechanisms currently in use and designed for the same purpose as the present mechanism are possessed of several functional disadvantages. A lock-equipped keeper mechanism of this general type invariably employs a keeper plate which is movable between a retracted inoperative position wherein the pull tab on the slidable lacing element of the slide fastener is exposed or accessible so that it may be manipulated for slide fastener operation, and an advanced operative position wherein it engages the pull tab and maintains the same flatly against the adjacent interlocked fingers of the slide fastener so that the pull tab is not accessible for manipulation. The keeper plate is held in its operative tab-engaging position by a conventional barrel and cylinder-type lock assembly having key-operated, spring-pressed tumblers for preventing relative turning movement between the barrel and plug except when rendered inoperatively by the proper key. The keeper plate is movable independently of the lock mechanism and in the locked condition of the lock assembly, a shoulder on the lock cylinder overlies or is otherwise positioned in the path of movement of the keeper plates so that the latter may not be moved away from its operative tab-engaging position. In its unlocked condition, the keeper plate is free to be moved out of cooperation with the pull tab so that the latter may be manually slid out of the sphere of influence of the lock assembly and toward its open position in the usual manner of operation of a conventional slide fastener.

One of the disadvantages associated with certain present-day access prevention mechanisms of the type under consideration resides in the fact that the key for the lock assembly is removable from the keyway provided for it in the lock cylinder only when the assembly is in its locked condition. This key, when in position in the keyway, is disposed in the path of movement of the independently movable keeper plate and obstructs the full free movement of the plate to a position remote from the pull tab of the slide fastener so that the access afforded the keeper plate is not the full free access required for proper and easy manipulation of the pull tab. The keeper plate does not fully uncover the pull tab and thus the necessary manipulation of the latter to start the slide portion of the fastener on its may toward the open position thereof is materially hampered. Where pull tabs having locking levers formed thereon are concerned,

their use is precluded due to the large extent of movement of the pull tabs necessary to free the locking levers from the interlocking elements or fingers of the slide fastener.

Another limitation that is attendant upon the construction and use of present-day lock-equipped access prevention mechanisms for slide fasteners is the necessity of providing a pivotal or other movable connection between the independently movable keeper plate and the lock housing or other portion of the lock assembly. Such connections are not tamperproof and may be easily pried apart. Furthermore, they are not sufficiently rugged as to withstand constant usage. They are thus subject to wear and eventual deterioration and rupture.

A further limitation which is attendant upon the use of present-day keeper mechanisms resides in the fact that the keeper plate will not always move easily to its full locking position. This is especially the case where, in the case of a money bag, for instance, the bag is fully filled and there is a tendency for the slide fastener to bulge in the vicinity of the keeper plate. The keeper plate in such an instance will not move, or it can be moved only with great difficulty, to its home position against the pull tab and, until it is in such home position, the locking shoulder on the lock cylinder will not slide to its locking position over the keeper plate, the net result being that the lock cylinder may not be turned to its final position nor the key removed from the keyway in the cylinder. In short, the slide fastener cannot be closed.

The present invention is designed to overcome the above-noted limitations that are attendant upon the construction and use of present-day keeper mechanisms for lock-equipped slide fasteners of this general type, and toward this end, the invention contemplates the provision of a slide fastener keeper mechanism, including a keeper plate which is fixed to, and movable bodily with, the lock cylinder and projects radially outwardly so that it overhangs a portion of the lock housing in such a manner that upon turning of the lock cylinder toward its locked position, the overhanging or distal end of the plate will move over the lacing element of the slide fastener, and by a camming action, force the lacing element against an anvil or seat surface on the lock housing, while at the same time partially concealing the pull tab, which is movably attached to the lacing element, and otherwise rendering it inaccessible for manipulation. By such an arrangement, and because of the fact that the keeper plate and lock cylinder are fixedly secured together so that they move in unison, and because the union therebetween is a strong one, the keeper plate is not readily dislodged by a prying or similar operation.

The provision of a lock-equipped keeper mechanism of the character briefly outlined above and possessing the stated advantages being among the principal objects of the invention, it is another and general object to provide such a mechanism which is rugged and durable and, therefore, is unlikely to get out of order. Another general object of the invention is to provide a mechanism of the type and character under consideration and which is comprised of a minimum number of parts thereby contributing toward economy of manufacture.

Other objects and advantages of the invention, not at this time enumerated, will become more readily apparent as the following description ensues.

In the accompanying two sheets of drawings forming a part of this specification, one illustrative embodiment of the invention has been shown.

In these drawings:

FIG. 1 is a perspective view of a money bag showing the improved keeper mechanism of the present invention operatively applied to a slide fastener in associated relation with the bag;

FIG. 2 is an enlarged fragmentary plan view of the keeper mechanism showing the same in its operative position on the slide fastener;

FIG. 3 is a plan view similar to FIG. 2 but showing the keeper mechanism in its inoperative position;

FIG. 4 is a sectional view taken on the line 4—4 of FIG. 2;

FIG. 5 is a bottom plan view of a keeper plate employed in connection with the present invention;

FIG. 6 is a sectional view taken centrally and vertically through the lock housing of the present invention;

FIG. 7 is a sectional view taken on the line 7—7 of FIG. 4;

FIG. 8 is a sectional view taken on the line 8—8 of FIG. 7;

FIG. 9 is an enlarged perspective view of the particular lock housing which is employed in connection with the present invention; and

FIG. 10 is a plan view of the structure shown in FIG. 9.

Referring now to FIG. 1, the improved keeper mechanism of the present invention has been shown herein for exemplary purposes as being applied to a flexible money or coin bag **10** of the type generally used by delivery truck drivers for keeping the day's receipts during a given run. The bag shown in FIG. 1 is in the form of an envelope-like container comprising a single sheet of canvas, cloth, duffel or other strong cloth material folded upon itself intermediate two opposed edges thereof to provide two sections **12** and **14**, the sections being stitched together as at **16** along three side edges of the container including the folded edge, while the fourth or upper edge remains unstitched to provide an entrance opening which is adapted to be closed by means of a conventional slide fastener assembly **18**.

The slide fastener may be of the so-called "zipper" type and includes the usual pair of cloth attachment strips **20** which are secured to the sections **12** and **14**, respectively, by double rows of stitching **21**. Each cloth strip **20** carries the usual series of spaced locking fingers **22**, the locking fingers of the two strips being designed for interlacing engagement with each other under the control of a slidable lacing element **24** having an upstanding bail **26** to which there is movably attached a pull tab **28**.

The slide fastener assembly **18** is standard or conventional in its design and no claim is made to any novelty associated with the same. The construction of the slide fastener assembly is such that, as the lacing element **24** is slid in one direction along the upper edge of the container **10**, as shown in FIG. 1, the locking fingers **22** of the two strips **20** are progressively brought together and caused to become interlaced so as to close the entrance opening of the container. As the lacing element **24** is slid in the other direction along the upper edge of the container, the locking fingers **22** of the two strips are progressively unlaced and separated as is well-known in the art.

Still referring to FIG. 1, the linear extent of the slide fastener assembly **18** is somewhat less than the linear extent of the edge of the container which the slide fastener assembly is adapted to close, and the void which is left near the upper left-hand corner of the container, as seen in this view, serves to receive therein a lock housing **30** (FIG. 9) which forms an element of the present keeper mechanism. Briefly, the keeper mechanism further includes a rotatable plug or cylinder **32** to which there is fixedly secured a keeper plate **34**; a conventional tumbler arrangement **36** for releasably locking the cylinder **32** to the housing **30** against turning movement therein; a key **38** (FIG. 3) for actuating the tumbler arrangement as well as for turning the cylinder when the tumbler arrangement is in its position of release; and a reinforcing attachment strap **40** of leather or other suitable material which provides a reinforced attachment area on the container by means of which the lock housing **30** is held securely in

position within the void provided for it in the upper edge region of the container, as previously described.

Referring now to FIGS. 4, 6, 7 and 9, the lock housing **30** is in the form of a metal, block-like body having flat side faces **42**, a curved rear face **44**, a flat bottom face **46**, a flat top face **48**, and a tapered front face **50** from which there projects forwardly a reduced extension **52**. The upper face **53** of the extension **52** constitutes an anvil or seat surface for the lacing element **24**. The side faces **42** and rear face **44** are undercut as at **54** to provide, in effect, an upper head portion **56** on which the flat top face **48** is formed. The extreme forward end region of the extension **52** is provided with a short, upwardly extending, U-shaped projection having a transverse rib portion **57** and lateral side wing portions **58**, the three portions defining therebetween an open three-sided socket **60** (see FIG. 7), the function of which will be made clear presently.

The lock housing is received within the folded, looped rear end of the entrance opening of the container **10**, as best seen in FIGS. 2 and 4, and the upper rim of the container closely underlies the undercut head portion **56**. This limited rim region of the cloth container is stretched tight around the lock housing and is reinforced by the attachment strap **40**. A rivet **62** extends through the bight portion of the strap **40**, as well as through the fold of the cloth container, and passes through a downwardly extending, curved attachment ear **64** (FIG. 4) which is formed on the underneath side of the housing **30**. A second rivet **66** passes through the two side wings of the attachment strap **40** and through the two sides **12** and **14** of the cloth container and also passes through the extension **52**. The two rivets **62** and **66** thus serve to hold the lock housing **30** securely in position within the looped end of the entrance opening so that, when the slide fastener assembly **18** is closed, the lock housing closes the void which otherwise would exist between the looped end of the opening and the adjacent end of the slide fastener.

Referring now to FIGS. 4 and 7, the body portion of the lock housing **30** is formed with a vertical, and generally cylindrical, bore **70** therethrough. At diametrically disposed regions thereacross, the bore **70** is provided with the usual vertical tumbler grooves **72** which afford clearance spaces for the tumblers constituting the tumbler arrangement **36**. The upper rim of the bore **70** is formed with an arcuate, circumferentially extending, recess **74** therein, the opposite ends **76** and **78** of which constitute limit stop shoulders for cooperation with a stop lug **80** (FIG. 5) on the underneath side of the keeper plate **34**, the nature and function of which will be made clear presently. The lower region of the cylindrical bore **70** is undercut as at **82** to provide the usual clearance pocket for the spring-pressed, cylinder-retaining, latch plate **84**.

The plug or cylinder **32**, except, insofar as the manner in which it cooperates with the keeper plate **34**, is conventional in its construction and design, and is in the form of a cylindrical body having the usual keyway **86** and tumbler slots **88** therein. The upper end of the cylinder **32** is formed with an annular radial flange **90** which is adapted to be received with a pressed-fit within an annular socket **92** (FIGS. 4 and 5) in the upper side of the keeper plate **34**. The annular socket **92** is formed at the upper end of a vertical bore **94** in the keeper plate, and the body of the lock cylinder **32** projects through this bore. A series of drive pins **96** may be employed for maintaining the keeper plate **34** and cylinder **32** in their assembled relationship, these drive pins passing through the annular flange **90** and through holes **97** (FIG. 5) provided in the bottom wall of the socket **92**.

The keeper plate **34** is in the form of a flat metal body of elongated design, and as previously stated and as clearly shown in FIG. 4, a portion thereof overhangs the body portion of the lock housing **30**. The keeper plate, being fixedly secured to the lock cylinder in the manner previously described, turns about the axis of the bore **70**

and swings in a horizontal plane. The stop lug **80** on the underneath face of the keeper plate **34** projects into the arcuate circumferentially extending recess **74** when the keeper plate and cylinder assembly is operatively associated with the lock housing. The arcuate extents of the recess and of the stop lug are such that the keeper plate and cylinder are limited to angular turning movements throughout a range of approximately 90°. When the stop lug **80** is in position against the shoulder **76**, the overhanging portion of the keeper plate **34** will overlie the forward extension **52** of the lock housing, as shown in FIG. 2, and, consequently, will overlie the lacing element **24** and pull tab **28** of the slide fastener when the latter is closed. When the stop lug is in position against the shoulder **78**, the overhanging portion of the keeper plate will overhang one of the side faces **42** of the lock housing, as shown in FIG. 3, and assume an out-of-the-way position with respect to the lacing element **24**.

Referring now to FIG. 3, when the lock cylinder and keeper plate are in the position in which they are shown in this figure, the key will be held in position within the keyway **86** against removal, and the adjacent end of the slide fastener assembly **18** will be exposed so that the pull tab **28** which is associated with the same is entirely uncovered and accessible for manipulation. The slide fastener may thus be opened or closed by elevating the pull tab out of the plane of the slide fastener and pulling the same in either direction to slide the lacing element **24** in one direction or the other in the usual manner of operation of such slide fasteners.

When it is desired to close the container **10** and prevent unauthorized access to the interior thereof, the lacing element **24** will be slid to the left, as viewed in FIGS. 1 to 4, inclusive, as far as it is capable of moving so that all of the locking fingers **22** will become interlaced and so that the lacing element will assume a position in close proximity to the forward end of the lock housing and overlying the extension **52** thereof. The body portion of the lacing element, as viewed in plan, is generally of tapered design. This lacing element is provided with a top wall **100** and a bottom wall **102**, the two walls being substantially identical in size and shape. The outline of the bottom wall **102** has been shown in dotted lines in FIG. 7 where its relationship with respect to the seat **53** is disclosed. As shown in this outline, the bottom wall **102** has a narrow forwardly extending portion **104**, which is of less width than the distance between the two side wing portions **58** on the seat **53**, and which is adapted to nest within the three-sided socket **60** on the upper face of the lock housing extension **52** and assume a position behind the transverse wall **57** when the lacing element **24** is in the extreme position in which it is shown in FIG. 4. With the bottom wall thus nested within the socket **60**, the pull tab **28** will overlie the transverse rib portion **57** and assume a horizontal position so that, when the keeper plate **34** is moved to its operative position overlying the lock housing extension **52**, it will also overlie the lacing element and a portion of the pull tab and prevent upward swinging movement of the latter.

In order more effectively to maintain the lacing element **24** in position on the seat **53** and within the socket **60**, the underneath side of the keeper plate **34** is formed with an arcuate, downwardly bulged cam rib **106** (FIGS. 4 and 5) having a central high region **108** formed thereon. When the keeper plate is in its position of alignment with the slide fastener assembly **18**, this high region **108** engages the bail **26** of the lacing element **24** and bears downwardly against the same to press the bottom wall **102** into the socket **60** so that the lacing element **24** may not be slid forwardly to unlace the various locking fingers **22** of the slide fastener. In this position of the keeper plate **34** and its associated lock cylinder **32**, the key **38** (FIG. 4) may be removed from the keyway **86**. Furthermore, the pull tab **28** is, for the most part, concealed and inaccessible so that, even if the seat **53** were not provided, it would be extremely difficult to grasp the pull tab with sufficient purchase to exert the necessary degree of pull upon the lacing element **24** to slide the same from beneath the overlying portion of the keeper plate **34**.

In order more effectively to maintain the pull tab **28** in its seated position on the transverse rib portion **57**, the underneath side of the keeper plate **34** is formed with a downwardly projecting, transversely extending, rib or flange **110** at the extreme distal end of the plate. The keeper plate **34**, when in its operative position, overhangs the forward end of the extension **52**, and the transversely extending rib **110** lies immediately forwardly of the extension and is adapted to bear downwardly on the horizontally disposed pull tab **28** and maintain the latter seated on said rib portion **57**. The transversely extending rib **110** cooperates with the cam rib **106** in shielding the lacing element and preventing unauthorized access thereto by a wedging or prying tool, and it also prevents upward prying of the pull tab by means of such a tool.

It is a characteristic of most slide fasteners of the type herein disclosed that, in order to start the lacing element thereof on its way toward its open position, it is necessary to exert not only a direct longitudinal pull upon the same, but this longitudinal pull must be accompanied by a component of outward pull to prevent the lacing element from canting forwardly and inwardly of the container with which the slide fastener is associated. Where lacing elements of the type employing a pull tab having a locking lever formed thereon are concerned, it is essential that the pull tab be moved to a wide angle from the plane of the slide fastener before the lacing element may be slid in either direction. Thus, when the keeper mechanism of the present invention is employed in connection with a slide fastener of this type, the lacing element is doubly and positively locked against movement, first, by reason of its association with the pocket **60**, and secondly, by reason of the fact that the pull tab **24** may not be raised from its horizontal position to release the lever action.

While the invention has been described herein in connection with a container in the form of a money bag, the principles of the invention are applicable to use with a wide variety of other containers, such as duffel bags, traveling cases, and the like. The containers need not be of the portable variety and the term "container" as employed herein in the specification and in the appended claims should be construed broadly so as to include, for example, tents having tent flaps which are closed by means of slide fasteners, tarpaulins, and other flexible cover devices too numerous to mention.

The invention is not to be limited to the exact arrangement shown in the accompanying drawings or described in this specification since various changes in the details of construction may be resorted to without departing from the spirit of the invention. Therefore, only insofar as the invention has particularly been pointed out in the appended claims is the same to be limited.

Having thus described the invention what I claim as new and desire to secure by Letters Patent is:

1. In a container having an elongated access opening, a lock housing disposed within the opening adjacent one end thereof, a slide fastener for closing said opening and including a lacing element movable along the opening between an open position wherein it is remote from the lock housing and a closed position wherein it is in close proximity to the lock housing and, in combination with the latter, closes the opening, said housing being formed with lateral sides and a forward extension which underlies the rim of the opening and which provides an upwardly facing seat, said lacing element, when in its closed position overlying said seat, a lock cylinder mounted for rotation in said housing and capable of angular turning movement between locked and unlocked positions, a keeper plate fixedly secured to the lock cylinder and projecting radially outwardly therefrom, said keeper plate,

when the cylinder is in its locked position, overlying said seat and being adapted to confine the lacing element between it and the seat when the lacing element is in its closed position, said keeper plate, when the cylinder is in its unlocked position, assuming an out-of-the-way position remote from the seat and wherein the lacing element is exposed and accessible for manipulation, said keeper plate being formed with an arcuate cam surface on the underneath side thereof and engageable with the lacing element during movement of the cylinder toward its locked position for forcing the lacing element downwardly into contact with said seat, and key and tumbler mechanism for controlling the operation of the lock cylinder.

2. In a container having an elongated access opening, the combination set forth in claim 1, including, additionally, an upstanding U-shaped locking projection on said seat having a portion thereof positioned in the path of movement of the lacing element forwardly of the latter for preventing sliding movement of the lacing element forwardly toward its open position, and also having parallel side portions adapted to straddle the lacing element to prevent lateral shifting of the latter on the seat.

3. In a container having an elongated access opening, a lock housing disposed within the opening adjacent one end thereof, a slide fastener for closing said opening and including a lacing element movable along the opening between an open position wherein it is remote from the lock housing, and a closed position wherein it is in close proximity to the lock housing and, in combination with the latter, closes the opening, said lacing element having

an upstanding bail, a flat pull tab movably connected to the bail, said housing being formed with lateral sides and a forward extension which underlies the rim of the opening and which provides an upwardly facing seat, an upwardly projecting transversely extending rib on said seat, said lacing element, when in its closed position, overlying said seat rearwardly of the rib with said pull tab assuming a horizontal position in contact with said rib and overhanging the latter, a lock cylinder mounted for rotation in said housing and capable of angular turning movement between locked and unlocked positions, a keeper plate fixedly secured to the lock cylinder and projecting radially outwardly therefrom, said keeper plate, when the cylinder is in its locked position, having a portion thereof projecting forwardly beyond said seat, a downwardly projecting flange on the forward projecting portion of the keeper plate and engageable with the pull tab when the cylinder is in its locked position for pressing the pull tab against said transversely extending rib, said keeper plate, when the cylinder is in its unlocked position, assuming an out-of-the-way position remote from the seat and wherein the lacing element is exposed and accessible for manipulation, and key and tumbler mechanism for controlling the operation of the lock cylinder.

References Cited in the file of this patent

UNITED STATES PATENTS

1,950,414	Rifkin	Mar. 13, 1934
1,950,415	Rifkin	Mar. 13, 1934