May 31, 1938. C. N. BRUMMETT 2,119,095

DIRECTIONAL DRILLING DEVICE

Filed March 4, 1937 2 Sheets-Sheet 1

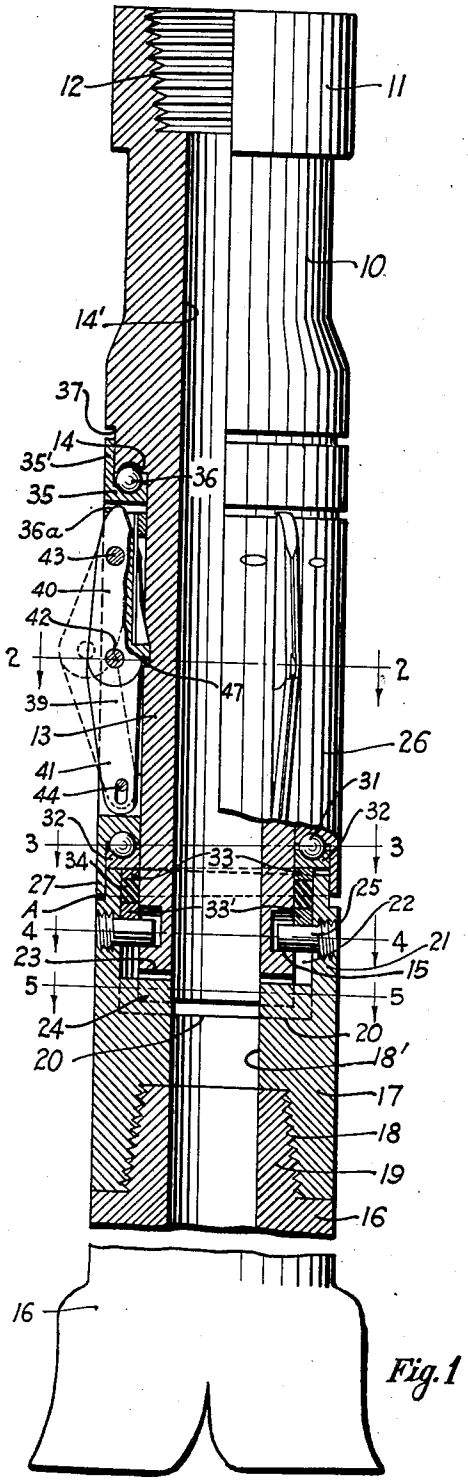


Fig. 1

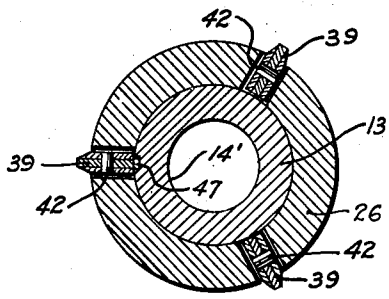


Fig. 2

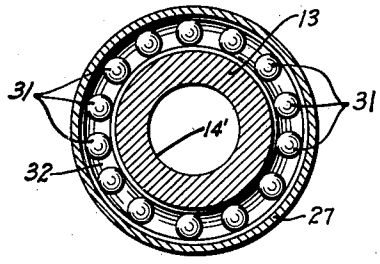


Fig. 3

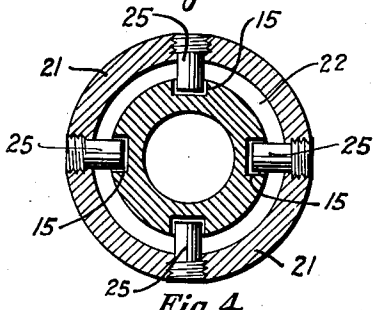


Fig. 4

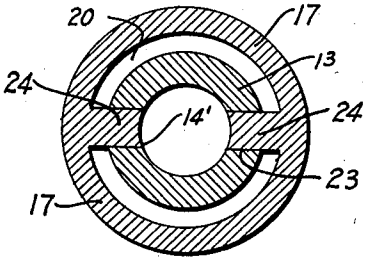


Fig. 5

Inventor

Charles N. Brummett

By Jack Ashley

Attorney

May 31, 1938. C. N. BRUMMETT 2,119,095

DIRECTIONAL DRILLING DEVICE

Filed March 4, 1937 2 Sheets-Sheet 2

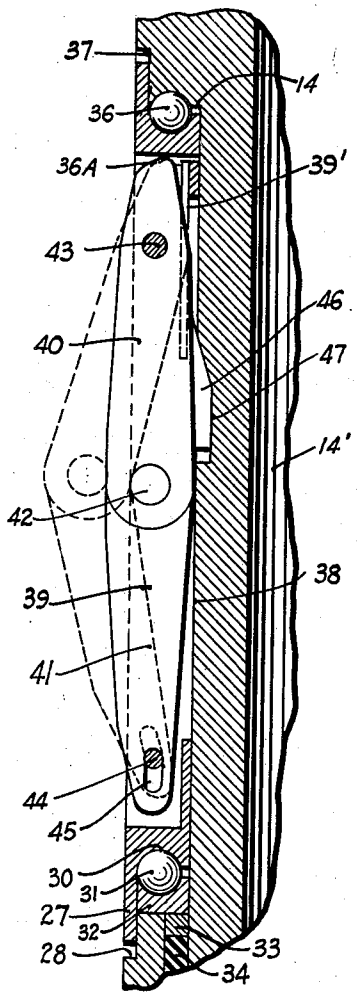


Fig. 7

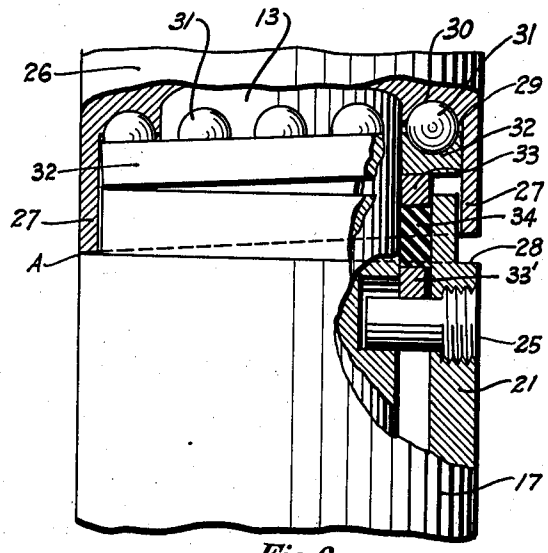


Fig. 6

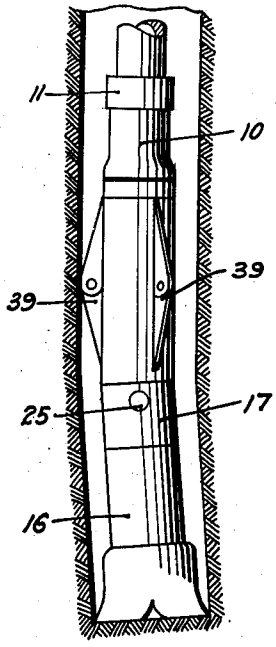


Fig. 8

Inventor

Charles N. Brummett

By Jack Ashley

Attorney

Patented May 31, 1938 2,119,095

# UNITED STATES PATENT OFFICE

2,119,095

## DIRECTIONAL DRILLING DEVICE

Charles N. Brummett, Wharton, Tex.

Application March 4, 1937, Serial No. 128,948

11 Claims. (Cl. 255—1)

This invention relates to new and useful improvements in directional drilling devices.

One object of the invention is to provide an improved drilling device for accurately controlling the drilling of a well bore.

An important object of the invention is to provide an improved drilling device having a drill bit of any construction mounted on its lower end, the device being so constructed that the bit is suspended in axial alinement with the drill stem while being lowered into the hole and is then inclined to drill in a desired direction upon reaching the bottom of the hole, such arrangement permitting the size of the bit to be substantially equal to the size of the bore, thereby eliminating offsets or shoulders in the bore upon change of direction in drilling.

Another object of the invention is to provide an improved directional drilling device adapted to be suspended from a drill stem and having a drill bit mounted to undergo an inclination with relation to the axis of the drill stem, whereby the direction of the drilling may be varied; there being means for holding the lower end of the drill stem above the drill bit in axial alinement with the well bore at all times, whereby the bending or bowing of the drill stem, due to the change of direction of drilling is reduced to a minimum and "twist-offs" are substantially obviated.

A further object of the invention is to provide an improved device of the character described wherein expansible guide members are provided not only for centering the device in the well bore but also for guiding the same in its vertical movement through said bore.

Still another object of the invention is to provide an improved drilling device of the character described, including a minimum number of parts which are so connected together that assembly or disassembly of the device is readily accomplished; the diameter of the device being such that when connected in the drill stem, the overhang or protuberance thereof is held at a minimum so that the device may readily be inserted into or removed from the well bore without "hanging up", or in any other way interfering with the "running in" of the drill stem and bit.

A construction designed to carry out the invention will be hereinafter described, together with other features of the invention.

The invention will be more readily understood from a reading of the following specification and by reference to the accompanying drawings, in which an example of the invention is shown, and wherein:

Figure 1 is a view, partly in elevation and partly in section of a directional drilling device, constructed in accordance with the invention;

Figure 2 is a horizontal, cross-sectional view, taken on the line 2—2 of Figure 1;

Figure 3 is a horizontal, cross-sectional view, taken on the line 3—3 of Figure 1;

Figure 4 is a horizontal, cross-sectional view, taken on the line 4—4 of Figure 1;

Figure 5 is a horizontal, cross-sectional view, taken on the line 5—5 of Figure 1;

Figure 6 is an enlarged view, partly in section and partly in elevation showing the connection between the lower end of the sleeve and the sub;

Figure 7 is an enlarged view showing one of the expansible alining members; and

Figure 8 is an elevation, showing the device within the well bore in drilling position.

In the drawings, the numeral 10 designates an elongate, tubular mandrel or body which has an integral collar 11 at its upper end. The collar is internally screw-threaded to provide a socket 12, whereby the lower end of a drill stem (not shown) may be attached thereto to suspend the mandrel therefrom. The lower end of the mandrel is reduced to form a shank 13 and this reduction in diameter forms an external annular shoulder 14 on the mandrel. The lower exterior surface of the shank has a plurality of vertically extending recesses or grooves 15 therein, and although four of these recesses have been shown spaced equally around the shank Figure 4), any desired number may be provided.

For rotatably connecting a drill bit 16 from the lower end of the shank, an annular sub 17 has a threaded socket 18 in its lower end. The screw-threaded nipple 19 of the bit body is screwed into the socket to connect the sub and bit body together, whereby rotation of the sub imparts rotation to the bit. The bore 18' of the sub is of substantially the same diameter as the bore 14' and is normally in axial alinement therewith, as will be explained. The upper end of the bore of the sub is reduced to form an annular internal shoulder 20 and an upwardly extending annular flange or collar 21. The lower end of the shank 13 is inserted within this collar and the external diameter of the shank is less than the internal diameter of said collar, whereby an annular space 22 is provided between these parts. The bottom of the shank has diametrically extending slots 23 therein and when the shank is within the collar

21 of the sub 17, these slots receive transverse keys 24 which extend upwardly from the internal shoulder 20 of said sub (Figure 5). For suspending the sub from the shank 13, radially extending pins 25 are threaded in the collar of said sub and have their inner ends engaging and capable of vertical movement within the recesses 15 provided in the surface of the shank.

From the above, it will be manifest that the sub 17 and drill bit 16 are suspended from the lower end of the shank by the pins 25. The shank and sub are rotatably connected by means of the keys 24 and slots 23. It is noted that normally the pins 25 are resting at the bottom of the recesses, being held so by the weight of the bit and sub. At such time, there is a clearance between the upper end of the keys and the base of the slots (Figure 1) whereby the shank and sub may undergo a limited movement with relation to each other. During such movement, the pins 25 of course, would move upwardly in the recesses 15. The pins cannot only undergo a vertical movement within the recesses, but are also capable of a limited lateral movement due to the clearance between each pin and the walls of its recess (Figure 4).

When the mandrel 10 is attached to a drill stem (not shown) and lowered into the well bore, the weight of the drill bit 16 and sub 17 will cause said bit to hang straight in the bore, as the pins 25 are at such time resting at the bottom of the recesses. However, when the bit strikes bottom and pressure is applied to one side of the collar 20 at the upper end of the sub 17, said sub and bit attached thereto will be inclined out of axial alinement with the mandrel 10. This inclination will be produced by the swinging motion imparted to the sub by the application of pressure to one side of its upper end.

For inclining the bit 16 and sub 17 so as to change the direction of the well bore, a sleeve 26 surrounds the shank 13 of the mandrel 10 being slidably and rotatably mounted thereon. The sleeve has an annular skirt or apron 27 at its lower end and this skirt has its bottom disposed at an inclination (Figure 7) whereby it is higher on one side than on the other. The upper end of the collar 21 of the sub 17 is formed with an external shoulder 28 whereby its extreme upper end is reduced. The skirt 27 of the sleeve encircles this reduced upper end and one side of said skirt engages the shoulder, while the other side thereof is spaced from said shoulder.

An internal shoulder 29 is formed between the skirt 27 and the bore 26' of the sleeve and this shoulder is inclined in a horizontal plane, complementary to the inclination of the bottom of the skirt. An annular groove 30 is provided in the shoulder 29 and ball bearings 31 are mounted within this groove and also within a ball bearing raceway in the top of a ring 32 located within the skirt. The ring rests on a metallic ring 33 which is supported on an elastic packing collar 34 disposed within the annular space 22 between the shank 13 and the collar 21 of the sub 17. The packing collar is, in turn, supported on a second metallic ring 33' which rests on the pins 25.

With the parts in their normal position, one side of the skirt 27 of the sleeve 26 is resting on the shoulder 28 of the collar 21 of the sub, while the opposite side is spaced therefrom due to the inclination in a horizontal plane of the bottom of the skirt. The weight of the sleeve has caused the packing collar 34 to be deformed into packing position at one side, while the opposite side of said collar remains in a normal undistorted position (Figure 6). The inherent or natural elasticity of the packing collar, holds the raceway 32 of the bearing 31 in the position shown in Figure 6. At this time, the sub and bit are hanging axially from the shank being suspended from the pins 25.

With the lower end of the sleeve in the position just described, the upper end of said sleeve terminates below a ball bearing raceway ring 35 which surrounds the shank 13 below the shoulder 14. The ring 35 is slidable on the shank and ball bearings 36 are confined between said ring and an annular groove formed in the shoulder. The ring is formed with an upwardly directed annular flange 35' which is disposed within an annular recess or offset 37 in the exterior surface of the mandrel above the shoulder 14.

The sleeve is provided with a plurality of slots or openings 38 which extend substantially throughout the length of the sleeve. An expansible alining and guide member 39 is mounted in each slot and is arranged to be expanded into engagement with the wall of the well bore. Each member 39 comprises an upper link 40 and a lower link 41 which have their inner ends pivoted together on a pin 42. The upper end of the upper link 40 is pivoted to the sleeve 26 on a pin 43, while the lower link 41 is pivoted thereto on a pin 44. This lower link has a slot 45 through which the pin 44 extends, whereby the sleeve may undergo a limited movement with relation to the link. Three expanding members 39, equally spaced around the sleeve, are shown but obviously, more or less may be employed. A leaf spring 39' is attached to each member and exerts its pressure to normally hold in the member in its unexpanded position.

When the links are in their normal unexpanded position, the upper end of the upper link extends above the sleeve 26 and engages the raceway ring 35 to hold said ring in engagement with the ball bearings 36. This upper end is curved as shown at 36a, whereby a contact surface is provided. One of the alining and guide members 39 has its upper link provided with a vertical key 46 which is adapted to engage a complementary groove or keyway 47 in the surface of the shank 13. This groove is located above that portion of the skirt 27 which engages the shoulder 28 which places it diametrically opposite the greatest space or clearance between said skirt and shoulder. When the members 39 are retracted this key engages the groove to lock the sleeve against rotation on the shank. Of course, when the members are expanded the shank may rotate within the sleeve.

In operation, the device is lowered into the well bore with the bit in axial alinement with the mandrel and shank. The parts are in the position shown in Figures 1 and 6, with the pins 25 in the lower ends of the slots 15 and a clearance between one side of the skirt 27 and the shoulder 28 of the collar 21. The members 39 are of course in their retracted position at this time.

When the drill bit 16 strikes the bottom of the hole, its movement, as well as the movement of the sub, is halted. The drill stem and mandrel are continued downwardly so that the keys 24 on the sub 17 move upwardly into engagement with the base of the slots 23 and the pins 25 move upwardly within the recesses 15. Since the skirt 27 of the sleeve 26 is engaging the shoulder 28 on the upper end of the subcollar at one point there-

on, the sleeve is held stationary along with the bit and sub. The downward movement of the mandrel 10 and shank 13 causes the raceway 35 beneath the external shoulder 14 on said mandrel, to apply to the upper link 40 of each expansible member 39. Due to the curved surface of the upper end of said link, the upper end of the same is forced inwardly which swings the lower end of the link outwardly. Since this link is pivoted to the lower link 41, the links are moved outwardly to the position shown in dotted lines in Figures 1 and 7. The outward movement of the members 39 causes them to move into engagement with the wall of the well bore. Since the members are spaced equally around the sleeve and also since they expand simultaneously, it will be obvious that they act to center the sleeve and mandrel extending therethrough axially within the well bore.

At the same time that the weight of the mandrel and drill stem (not shown) is applied to the members 39 to move them to their expanded position, this weight is also applied to the sleeve through the pin 43, whereby said sleeve is tending to move downwardly on the shank. However, since the sleeve is supported at the point A on the shoulder 28, the weight is transferred to this point at the upper end of the sub. As the expansible members 39 move to their expanded positions, the entire weight of the drill stem and mandrel is then placed on the sleeve as the raceway 35 engages the top of the sleeve. When this occurs, the entire load is placed on the point A at the upper end of the sub and since the sleeve 26 cannot change its position on the shank 13, this load causes the sub 17 and bit to swing laterally so that the upper end of the sub collar 21 contacts the lower end of the skirt throughout its entire periphery. This swinging of the bit moves the same out of axial alinement with the mandrel and drill stem and therefore, rotation causes the drilling to continue in a direction at an angle to the well bore (Figure 8).

The angle of drilling is controlled by the inclination of the bit with relation to the mandrel and this inclination is readily controlled by the inclining of the bottom of the skirt 27 of the sleeve. It is the clearance between the "high side" of this skirt and the shoulder 28 which limits the swinging of the bit and sub. When the bit 17 moves to its inclined position, the packing collar 34 is deformed or distorted into its sealing position, whereby a fluid tight joint is formed between the shank 13 and mandrel and therefore, drilling fluid may be pumped downwardly through the mandrel and sub to the bit.

The drill bit will of course, always incline in a direction away from the point of contact between the skirt 27 and shoulder 28 which is the point A. It is preferable that the groove 47 be located directly above this point or opposite the "high side" of the skirt. Thus, the expansible member 39 which has the key 46 thereon is always opposite this "high side" or opposite the direction in which the drill bit will move or swing. Therefore, by noting the radial position of the key 46 and slot 47, it is possible to lower the device into a well and incline the bit into the desired direction upon reaching the bottom of the bore.

Manifestly, the members 39, when expanded, act to hold the sleeve, mandrel and drill stem axially alined within the well bore. Therefore, the drill stem is prevented from bending or bowing excessively which results in more efficient drilling and obviates danger of "twist offs". The members 39 not only center the lower end of the drill stem but also engage in the wall of the bore to provide guides for the vertical movement of the stem through the bore as the drilling continues.

The slot 45 in the lower end of each lower link 41 compensates for changes in the formation engaged by the members 39. Assuming the members are engaging a relatively soft formation, they will dig in or engage the formation to a relatively deep depth. If a hard formation is reached, said members cannot penetrate as deeply and therefore must be retracted to some degree. This is accomplished automatically for when such a condition arises, the lower link 40 merely moves downwardly, the pin 44 moving within the slot. Therefore, the expansion or retraction of the members is possible within certain limits without in any way affecting the relative positions of the other parts.

From the above, it will be seen that a directional drilling device which is very simple in construction is had. To disassemble the device, it is only necessary to remove the pins 25, and all the parts may be separated. Assembly is just as simple and no adjustments are necessary. Since the device may be lowered into the bore with the bit suspended axially, the size of the bit may be substantially equal to the size of the bore. When the directional drilling begins, the same size bore is continued at an angle, and the offset or shoulder formed when a smaller bit is employed to change the direction of the hole, is eliminated. It is noted that although a "fish-tail" bit is shown connected to the sub 17, any desired type of bit may be employed.

What I claim and desire to secure by Letters Patent is:

1. A drilling device including, a mandrel adapted to be connected to the lower end of a drill stem, a drill bit having driving connection with the mandrel and suspended from the lower end thereof and mounted to undergo a limited swinging movement, said bit normally being in axial alinement with the mandrel as the same is lowered through the well bore, and means for swinging said bit to incline the same in a vertical plane when the bit strikes bottom, whereby the direction of drilling is changed.

2. A drilling device including, a mandrel adapted to be connected to the lower end of a drill stem, a drill bit having driving connection with the mandrel and suspended from the lower end thereof and mounted to undergo a limited swinging movement, said bit normally being in axial alinement with the mandrel as the same is lowered through the well bore, means for swinging said bit to incline the same in a vertical plane when the bit strikes bottom, whereby the direction of drilling is changed, and means for centering the lower end of the mandrel and drill stem axially within the well bore when the bit is in its inclined position.

3. A drilling device including, a mandrel adapted to be connected to the lower end of a drill stem, a drill bit having driving connection with the mandrel and suspended from the lower end thereof and mounted to undergo a limited swinging movement, said bit normally being in axial alinement with the mandrel as the same is lowered through the well bore, means for swinging said bit to incline the same in a vertical plane when the bit strikes bottom, whereby the direction of drilling is changed, expansible centering and guiding members mounted on the mandrel, and means

for expanding said members into engagement with the wall of the well bore when the bit is inclined, whereby the lower end of the drill stem is axially alined in the bore and is also guided in its vertical movement as the directional drilling continues.

4. A drilling device including, a mandrel adapted to be connected to the lower end of a drill stem, a drill bit having driving connection with the mandrel and suspended from the lower end thereof and mounted to undergo a limited swinging movement, said bit normally being in axial alinement with the mandrel as the same is lowered through the well bore, expansible means for centering the lower end of the mandrel and drill stem, and means for imposing the weight of the drill stem and mandrel on the expansible means and also onto one side of the upper end of the drill bit, whereby the centering means is expanded into engagement with the wall of the well bore and the bit is inclined out of axial alinement with the drill stem and mandrel.

5. A drilling device including, a mandrel adapted to be connected to the lower end of a drill stem, a drill bit having driving connection with the mandrel and suspended from the lower end thereof and being capable of a limited swinging movement with relation thereto, said bit normally being in alinement with the mandrel as the same is lowered through the well bore, a sleeve rotatably mounted on the mandrel above the bit and having its lower end inclined in a horizontal plane, whereby said lower end engages the upper end of the bit at only one point on its periphery, and means for imposing the weight of the drill stem on the sleeve, whereby said weight is transferred to the bit at the point of contact of said sleeve, thereby swinging said bit to incline the same in a vertical plane when said bit strikes bottom, such inclination of the bit changing the direction of drilling.

6. A drilling device including, a mandrel adapted to be connected to the lower end of a drill stem, a drill bit having driving connection with the mandrel and suspended from the lower end thereof and mounted to undergo a limited swinging movement, said bit normally being in axial alinement with the mandrel as the same is lowered through the well bore, means for swinging said bit to incline the same in a vertical plane when the bit strikes bottom, whereby the direction of drilling is changed, and means for controlling the direction in which the bit is inclined to control the direction of drilling.

7. A drilling device including, a mandrel adapted to be connected to the lower end of a drill stem, a drill bit having driving connection with the mandrel and suspended from the lower end thereof and mounted to undergo a limited swinging movement, said bit normally being in axial alinment with the mandrel as the same is lowered through the well bore, means for swinging said bit to incline the same in a vertical plane when the bit strikes bottom, whereby the direction of drilling is changed, means for controlling the direction in which the bit is inclined to control the direction of drilling, and means for centering the lower end of the mandrel and drill stem axially within the well bore when the bit is in its inclined position.

8. A drilling device including, a mandrel adapted to be connected to the lower end of a drill stem, a drill bit having driving connection with the mandrel and suspended from the lower end thereof and being capable of a limited swinging movement with relation thereto, said bit normally being in alinement with the mandrel as the same is lowered through the well bore, a sleeve rotatably mounted on the mandrel above the bit and having its lower end inclined in a horizontal plane, whereby said lower end engages the upper end of the bit at only one point on its periphery, means for imposing the weight of the drill stem on the sleeve, whereby said weight is transferred to the bit at the point of contact of said sleeve, thereby swinging said bit to incline the same in a vertical plane when said bit strikes bottom, such inclination of the bit changing the direction of drilling, and means for controlling the direction in which the bit is inclined to control the direction of drilling.

9. A drilling device including, a mandrel adapted to be connected to the lower end of a drill stem, a drill bit having driving connection with the mandrel and suspended from the lower end thereof and being capable of a limited swinging movement with relation thereto, said bit normally being in alinement with the mandrel as the same is lowered through the well bore, a sleeve rotatably mounted on the mandrel above the bit and having its lower end inclined in a horizontal plane, whereby said lower end engages the upper end of the bit at only one point on its periphery, means for imposing the weight of the drill stem on the sleeve, whereby said weight is transferred to the bit at the point of contact of said sleeve, thereby swinging said bit to incline the same in a vertical plane when said bit strikes bottom, such inclination of the bit changing the direction of drilling, and means for centering the lower end of the mandrel and drill stem axially within the well bore when the bit is in its inclined position.

10. A drilling device including, a mandrel adapted to be connected to the lower end of a drill stem, a drill bit having driving connection with the mandrel and suspended from the lower end thereof and being capable of a limited swinging movement with relation thereto, said bit normally being in alinement with the mandrel as the same is lowered through the well bore, a sleeve rotatably mounted on the mandrel above the bit and having its lower end inclined in a horizontal plane, whereby said lower end engages the upper end of the bit at only one point on its periphery, means for imposing the weight of the drill stem on the sleeve, whereby said weight is transferred to the bit at the point of contact of said sleeve, thereby swinging said bit to incline the same in a vertical plane when said bit strikes bottom, such inclination of the bit changing the direction of drilling, and expansible centering and guiding members mounted on the sleeve and arranged to be expanded by the weight of the drill stem, whereby the lower end of the drill stem is axially alined in the bore and is also guided in its vertical movement as the directional drilling continues.

11. A drilling device including, a mandrel adapted to be connected to the lower end of a drill stem, a drill bit having driving connection with the mandrel and suspended from the lower end thereof and being capable of a limited swinging movement with relation thereto, said bit normally being in alinement with the mandrel as the same is lowered through the well bore, a sleeve rotatably mounted on the mandrel above the bit and having its lower end inclined in a horizontal plane, whereby said lower end engages the upper end of the bit at only one point on its periphery,

means for imposing the weight of the drill stem on the sleeve, whereby said weight is transferred to the bit at the point of contact of said sleeve, thereby swinging said bit to incline the same in a vertical plane when said bit strikes bottom, such inclination of the bit changing the direction of drilling, expansible centering and guiding members mounted on the sleeve, means for normally holding the members in their retracted position, and means for imposing the weight of the drill stem on said members to expand the same into engagement with the wall of the well bore, whereby the lower end of the drill stem is axially alined in the bore and is also guided in its vertical movement as the drilling continues.

CHARLES N. BRUMMETT.