June 8, 1965 D. R. RASMUSSON ET AL 3,188,417

ALARM SIGNAL STATION

Filed March 18, 1963

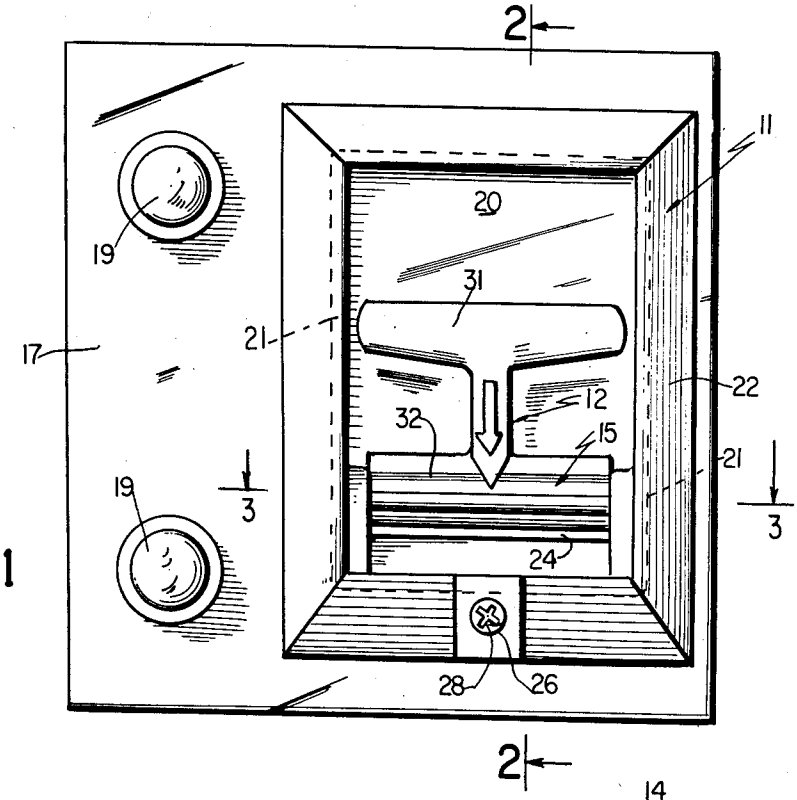

Fig. 1

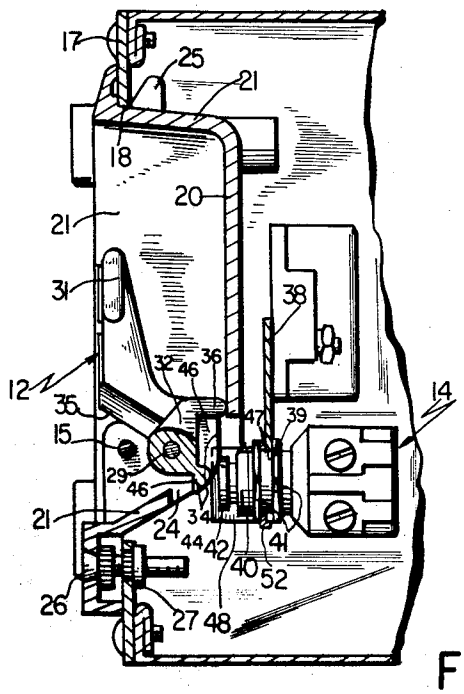

Fig. 2

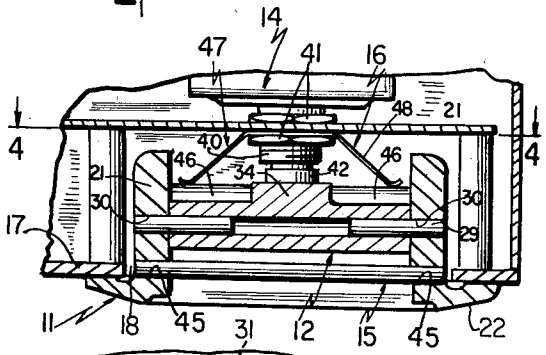

Fig. 3

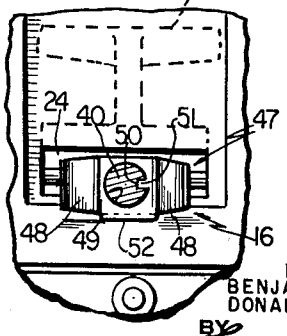

Fig. 4

INVENTORS
BENJAMIN WENDROFF
DONALD RASMUSSON
BY
Ernest A. Jensen
ATTORNEY

United States Patent Office 3,188,417 Patented June 8, 1965

3,188,417

ALARM SIGNAL STATION

Donald R. Rasmusson, Upper Montclair, and Benjamin Wendroff, Teaneck, N.J., assignors to Specialties Development Corporation, Belleville, N.J., a corporation of New Jersey

Filed Mar. 18, 1963, Ser. No. 265,643
5 Claims. (Cl. 200—61.08)

The present invention relates to electrical communications, and more particularly to an alarm signal station apparatus provided with an improved arrangement for giving an indication that the apparatus has been tampered with or has been operated to communicate an alarm.

Such apparatus generally comprises a box having a front wall formed with an opening, a switch mounted in the box in back of the opening, a closure for the opening, and a lever pivotally mounted on the closure and adapted to be operated manually to effect actuation of the switch. It has been proposed to provide apparatus of this type with means such as a frangible rod for giving a visual indication that the lever has been operated and/or an arrangement of means which prevents return of the lever to its normal or at rest position after being operated without removal of the closure from the box in a manner which only authorized personnel can perform. However, such means have unduly complicated the construction, operation and maintenance of the apparatus, and/or have unjustifiably increased the cost thereof.

Accordingly, an object of the present invention is to provide a simple, inexpensive arrangement for reliably performing the same general functions of the prior complicated and expensive apparatus.

Another object is to provide such an arrangement which prevents breakage of the frangible rod without operation of the lever.

Another object is to provide an improved arrangement for confining and replacing the frangible rod.

A further object is to provide an improved arrangement for locking the lever in its operated position.

A still further object is to provide such arrangements which render the apparatus very compact and economical to manufacture and assemble.

Other and further objects of the invention will be obvious upon an understanding of the illustrative embodiment about to be described, or will be indicated in the appended claims, and various advantages not referred to herein will occur to one skilled in the art upon employment of the invention in practice.

A preferred embodiment of the invention has been chosen for purposes of illustration and description, and is shown in the accompanying drawing, forming a part of the specification, wherein:

FIG. 1 is a front elevational view of apparatus in accordance with the present invention.

FIG. 2 is a sectional view taken substantially along the line 2—2 on FIG. 1.

FIG. 3 is a sectional view taken substantially along the line 3—3 on FIG. 1.

FIG. 4 is a sectional view taken along the line 4—4 on FIG. 3.

Referring now to the drawing in detail, alarm signal station apparatus is shown which generally comprises a box **10**, a closure **11**, a pull lever **12** on the closure, a switch **14** in the box operated by the lever, a frangible indicator **15** on the closure adapted to be broken by the lever upon operation thereof, and an arrangement **16** for locking the lever in its operated position.

The box **10** is generally rectangular and has a front wall **17** formed with a rectangular opening **18** (FIGS. 2 and 3) for receiving and removably mounting the

closure **11** as about to be described. The front wall may be a nameplate having suitable indicia and indicating lamps **19** thereon.

The closure **11** comprises an inner upright wall **20** (FIG. 2) and four rectangularly arranged side walls **21** dimensioned to extend into the opening **18** and formed with a flange or frame **22** (FIGS. 1 to 3) adapted to overlie the outer surface of the wall **17** adjacent its opening **18**. The closure by being so constructed provides a housing for the lever **12** and the indicator **15**. At about the junction of the inner wall **20** and the lower side wall **21**, an opening **24** is formed to enable a portion of the lever **12** to extend through the closure and into the box **10** for cooperation with the switch **14**.

As best shown in FIG. 2, the closure **11** is removably attached to the front wall **17** by providing the outer surface of the upper side wall **21** with one or more projections **25** which cooperate with the upper section of the frame **22** to receive the marginal portion of the front wall **17** at the upper edge of its opening **18**, and providing a screw **26** on the lower section of the frame **22** adapted to be threaded into a nut **27** in back of the front wall **17**. Preferably, the head of the screw **26** is formed with a slot **28** (FIG. 1) for receiving a special tool to thereby minimize tampering with the screw by means of conventional screw drivers, coins and the like.

The lever **12** is pivotally mounted on the closure **11** by a horizontal shaft **29** having its ends extending into openings **30** at opposite side walls **21** (FIG. 3); and includes a manually operable handle **31**, an arm **32** having a projection **34** thereon for operating the switch **14**, a portion **35** for breaking the indicator **15**, a portion **36** abutting the outer surface of the closure wall **20** to determine the normal, at rest or non-operated position of the lever.

The switch **14** is mounted on structure within the box **10** such as a plate **38** secured to the back of the front wall **17**. The plate **38** is formed with an aperture **39** through which a threaded body portion **40** of the switch extends for securement to the plate **38** by a pair of nuts **41** threaded into the body portion at opposite sides of the plate.

The switch **14** is of a conventional type which has a head **42** biased by a spring within the switch (not shown) into engagement with the projection **34** of the switch operating arm **32** to urge the lever in a rotational direction to normally maintain the indicator breaking portion **35** of the lever out of engagement and bias with the indicator **15** and to normally maintain the lever portion **36** in abutment with the closure wall **20**.

The indicator **15** is a frangible element such as a plastic or glass rod extending horizontally below the lever portion **35** and having its ends seated in openings or bores **45** at opposite side walls **21** of the closure (FIG. 3). Either or both of the bores **45** has an outer end facing side wall portions defining the opening **18**, whereby the ends of the frangible rod are blocked by these wall portions when the closure **11** is secured to the wall **17** and the rod can be inserted or replaced only when the closure **11** is detached from the wall **17** and is moved outwardly to expose the outer ends of the bores **45**.

The lever locking arrangement **16** (FIGS. 2, 3 and 4) includes recess means **46** on the lever arm **32** and a leaf spring **47** mounted on the switch **14** having blade means **48** adapted to extend into the recess means **46** when the lever **12** is pulled down to operate the switch and to thereby lock the lever against return movement to its normal position without detaching the closure **11** from the wall **17** to release the interlock provided by the recess and blade means. The spring **47** also acts like the switch spring to urge the lever in the direction as already indicated.

The arrangement 16 in its preferred form (FIG. 4) includes a recess 46 at opposite sides of the projection 34, and a blade 48 at opposite sides of the switch each adapted to extend into one of the recesses 46. The leaf spring 47 has an aperture 49 at the middle thereof for receiving the threaded body portion 40 of the switch and the outer nut 41 is applied to urge the spring 47 against the switch mounting plate 38. In order to orient the blades 48 with respect to the recesses 46, the body portion 40 is formed with a longitudinal groove 50 on its outer surface and the spring 47 is formed with a tongue 51 extending radially into the aperture 49 for reception by the groove 50. In this manner the tongue and groove arrangement serves to prevent the spring 47 from turning and cause misalignment of the blades 48 and recesses 46. Alternately or concurrently, this may be effected by providing the lower edge of the spring 47 at the middle thereof with a lip 52 which extends under and engages the lower edge of the plate 38.

From the foregoing description, it will be seen that the present invention provides improved alarm signal station apparatus which is simple and economical in construction, is reliable and durable in operation, and greatly minimizes tampering without such tampering being quickly detected.

As various changes may be made in the form, construction and arrangement of the parts herein, without departing from the spirit and scope of the invention and without sacrificing any of its advantages, it is to be understood that all matter herein is to be interpreted as illustrative and not in any limiting sense.

We claim:

1. In alarm signal station apparatus, the combination of a box having a wall formed with an opening; a closure member for said opening; a frangible element having its ends supported by said closure member; a lever pivotally mounted on said closure member including a handle portion, a portion for breaking said element to give an indication that said lever has been operated; a switch operating arm and a pushbutton type signalling switch mounted in said box including a head engaged by said switch operating arm, a spring mounted on said switch adjacent said head for biasing said lever in a rotational direction to normally maintain said element breaking portion out of bias with said element, and cooperating blade means on said spring and recess means on said switch operating arm for locking said lever in an operated position to give a second indication that said lever has been operated.

2. In alarm signal station apparatus, the combination of a box having a wall formed with an opening, a closure member for said opening, means for removably securing said closure member to said wall, a signalling switch mounted in said box including a head for effecting operation of said switch, a lever including a handle and an arm having a projection for engaging said head to effect operation of said switch and having recess means adjacent said projection, and a leaf spring mounted on said switch having blade means adapted to extend into said recess means when said lever is operated to thereby lock said lever in its operated position and to prevent return thereof to its normal position without removal of said closure member from said wall.

3. In apparatus according to claim 2, wherein said recess means include a recess at opposite sides of said projection, and said blade means include a blade at opposite sides of said switch each adapted to extend into one of said recesses.

4. In apparatus according to claim 3, wherein said switch includes a threaded body portion for mounting the same in said box, said box includes structure for mounting said switch formed with an opening through which said body portion extends, said leaf spring has an aperture at the middle thereof for receiving said body portion, and nut means are threaded onto said body portion for effecting securement of said leaf spring and said switch on said structure.

5. In apparatus according to claim 4, wherein said leaf spring includes means for orienting said blades with respect to said recesses.

References Cited by the Examiner

UNITED STATES PATENTS

626,318	6/99	Callum	340—303
2,356,989	8/44	Getz et al.	340—303
2,726,381	12/55	Verkuil	340—303
2,822,451	2/58	Holmes	200—61.08 X
2,985,741	5/61	Ellman	340—303 X

NEIL C. READ, *Primary Examiner.*