US 20150192792A1

(19) United States

(12) Patent Application Publication

(10) Pub. No.: US 2015/0192792 A1

(43) Pub. Date: Jul. 9, 2015

MORIYA et al.

(54) **LENS DRIVE APPARATUS, CAMERA MODULE AND CAMERA**

(71) Applicant: **MITSUMI ELECTRIC CO., LTD.**, Tokyo (JP)

(72) Inventors: **Akihiro MORIYA**, Tokyo (JP); **Masayoshi SUGAWARA**, Tokyo (JP)

(21) Appl. No.: **14/664,138**

(22) Filed: **Mar. 20, 2015**

Related U.S. Application Data

(63) Continuation of application No. 13/390,603, filed on Feb. 15, 2012, now Pat. No. 9,013,588.

Publication Classification

(51) **Int. Cl.**

G02B 27/64	(2006.01)
H04N 5/232	(2006.01)
G02B 7/09	(2006.01)

(52) **U.S. Cl.**

CPC ***G02B 27/646*** (2013.01); ***G02B 7/09*** (2013.01); ***H04N 5/23287*** (2013.01)

(57) **ABSTRACT**

A lens drive apparatus that displaces a lens holder in a direction of an optical axis and a direction orthogonal to the optical axis comprises: a coil that is assembled together with the lens holder to form an assembly; a magnet that is disposed at a position facing the coil; a magnet holder that holds the magnet; and a housing to which the magnet is attached and which houses the assembly.

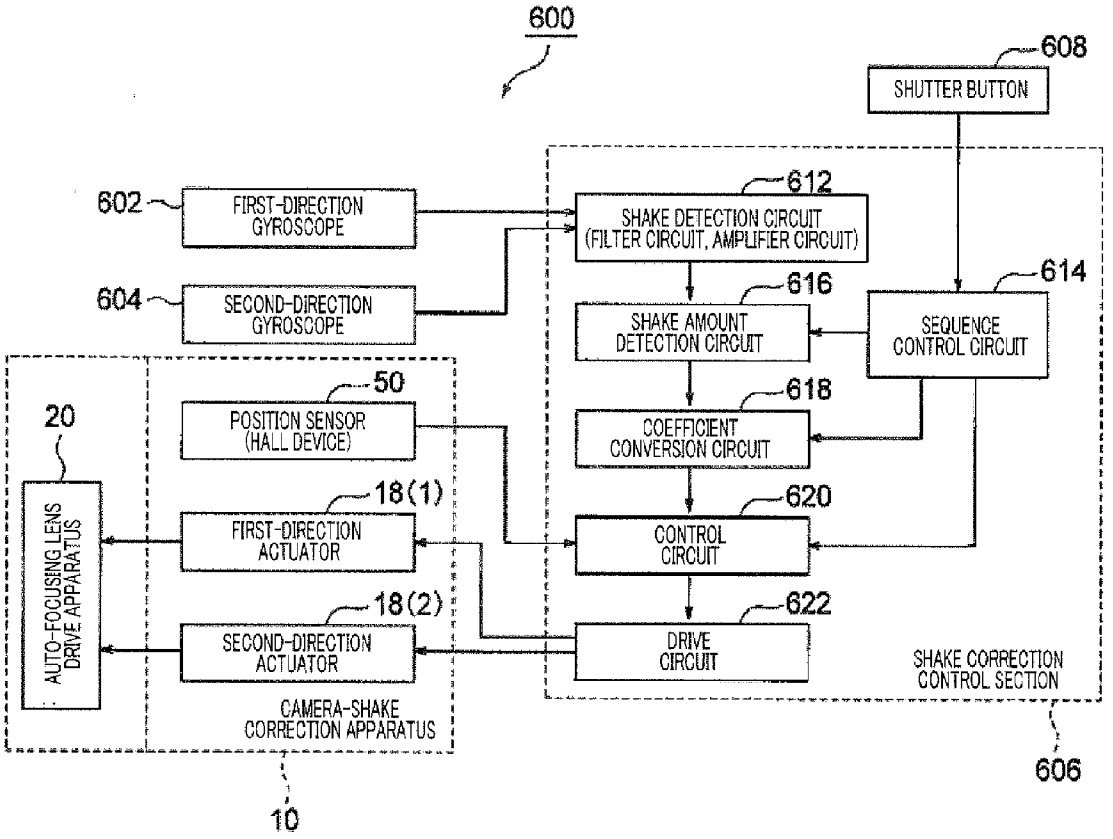

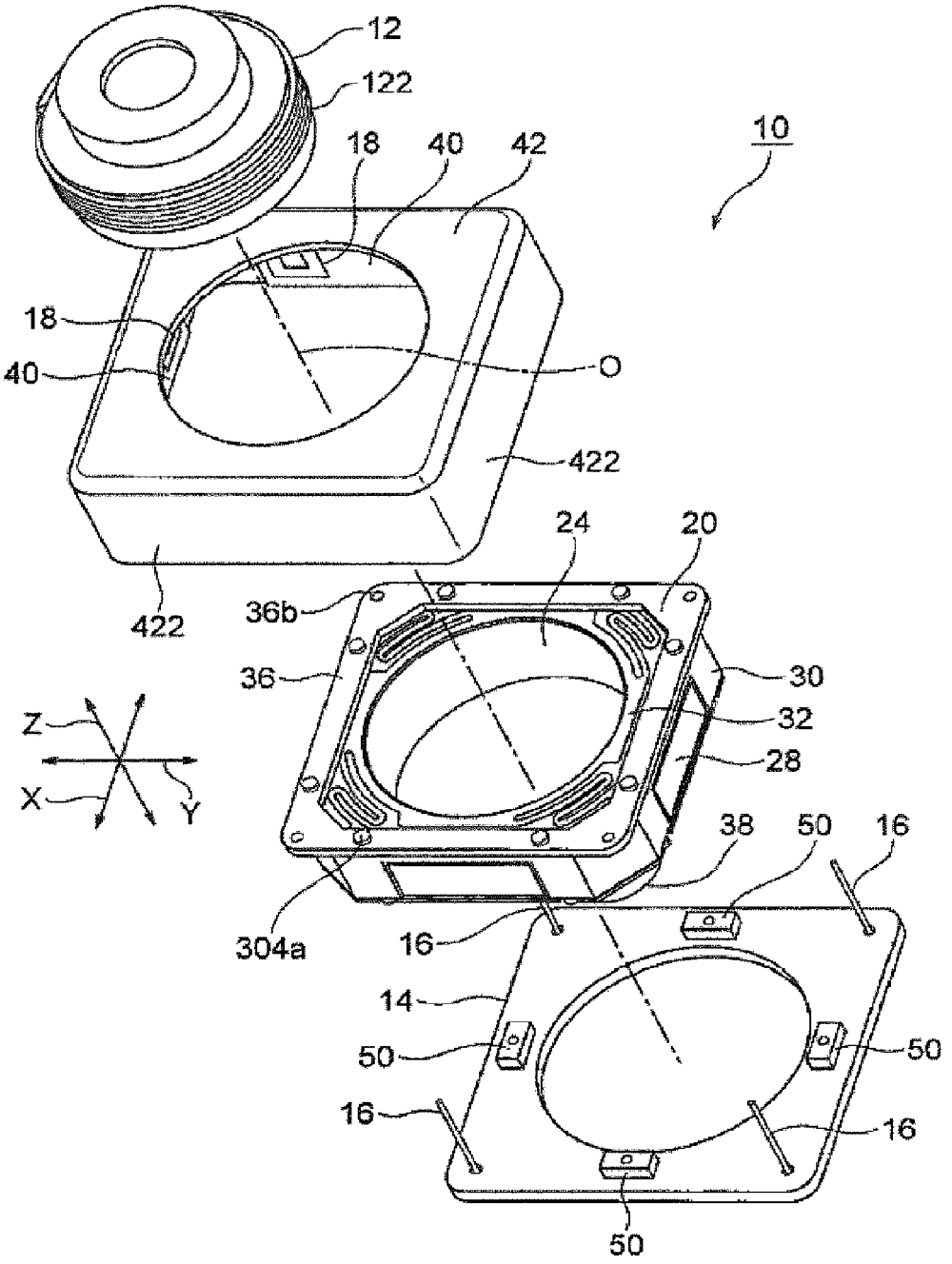
12
122
18
40
42
10
18
40
O
422
422
24
20
36b
36
30
32
28
Z
X
Y
38
50
16
304a
16
14
50
50
16
16
50

FIG.1

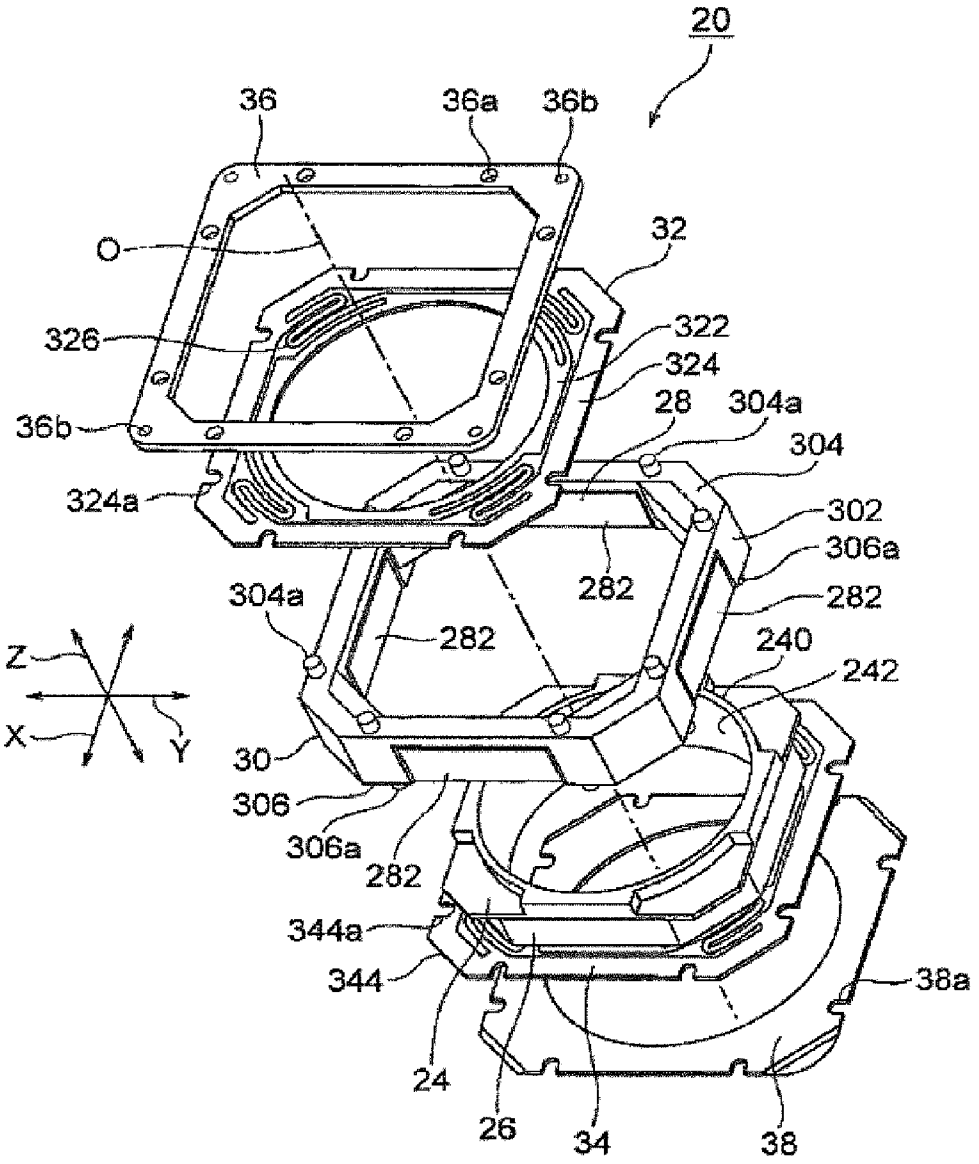
20
36
36a
36b
O
32
326
322
324
28
304a
304
36b
324a
302
306a
282
282
304a
282
240
242
Z
X
Y
30
306
306a
282
344a
344
38a
24
26
34
38

FIG.2

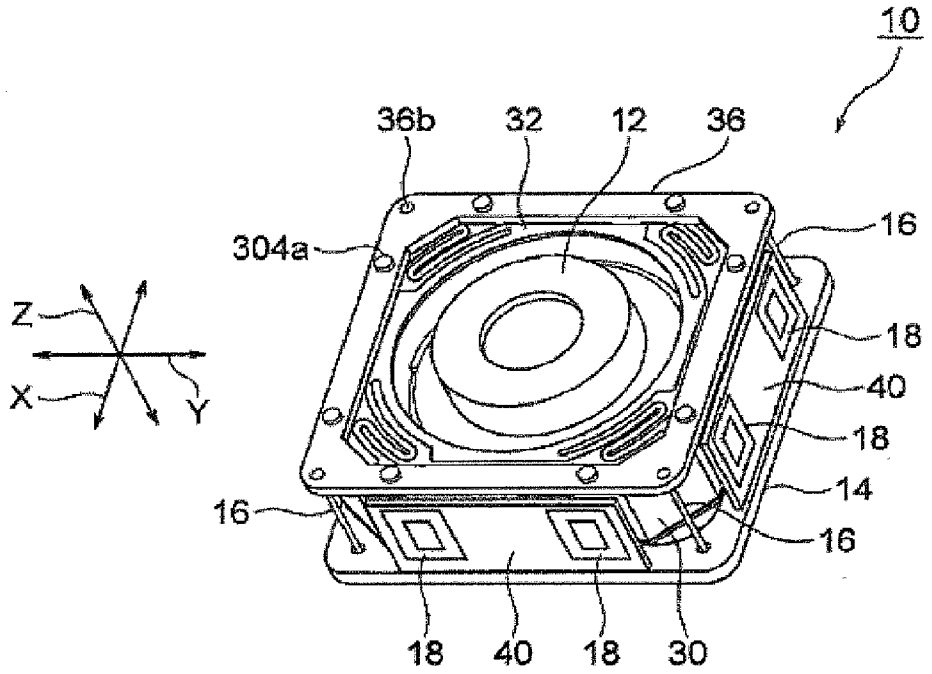

FIG.3

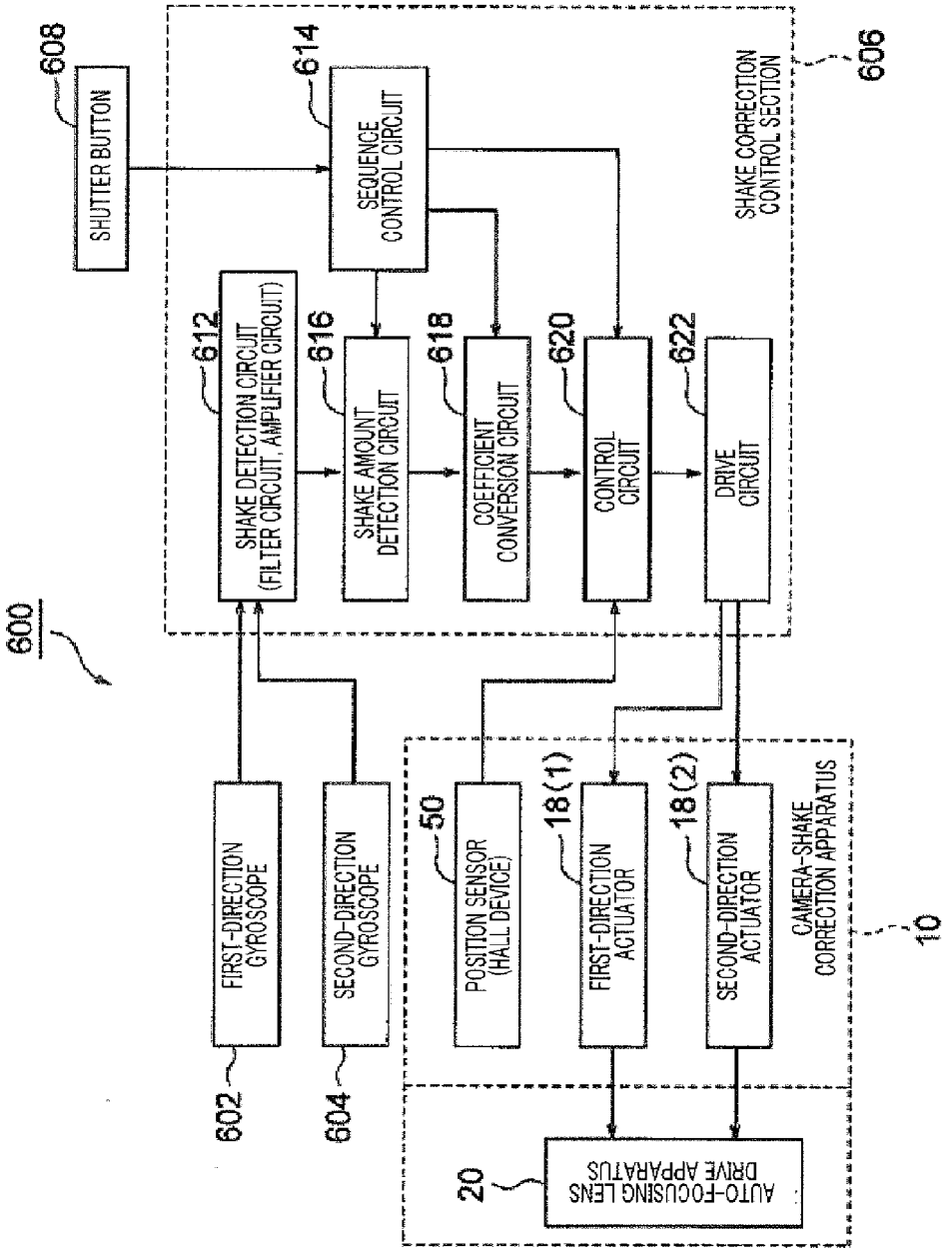
600
608
SHUTTER BUTTON
614
SEQUENCE CONTROL CIRCUIT
606
SHAKE CORRECTION CONTROL SECTION
612
SHAKE DETECTION CIRCUIT (FILTER CIRCUIT, AMPLIFIER CIRCUIT)
616
SHAKE AMOUNT DETECTION CIRCUIT
618
COEFFICIENT CONVERSION CIRCUIT
620
CONTROL CIRCUIT
622
DRIVE CIRCUIT
602
FIRST-DIRECTION GYROSCOPE
604
SECOND-DIRECTION GYROSCOPE
50
POSITION SENSOR (HALL DEVICE)
18(1)
FIRST-DIRECTION ACTUATOR
18(2)
SECOND-DIRECTION ACTUATOR
10
CAMERA-SHAKE CORRECTION APPARATUS
20
AUTO-FOCUSING LENS DRIVE APPARATUS

FIG.4

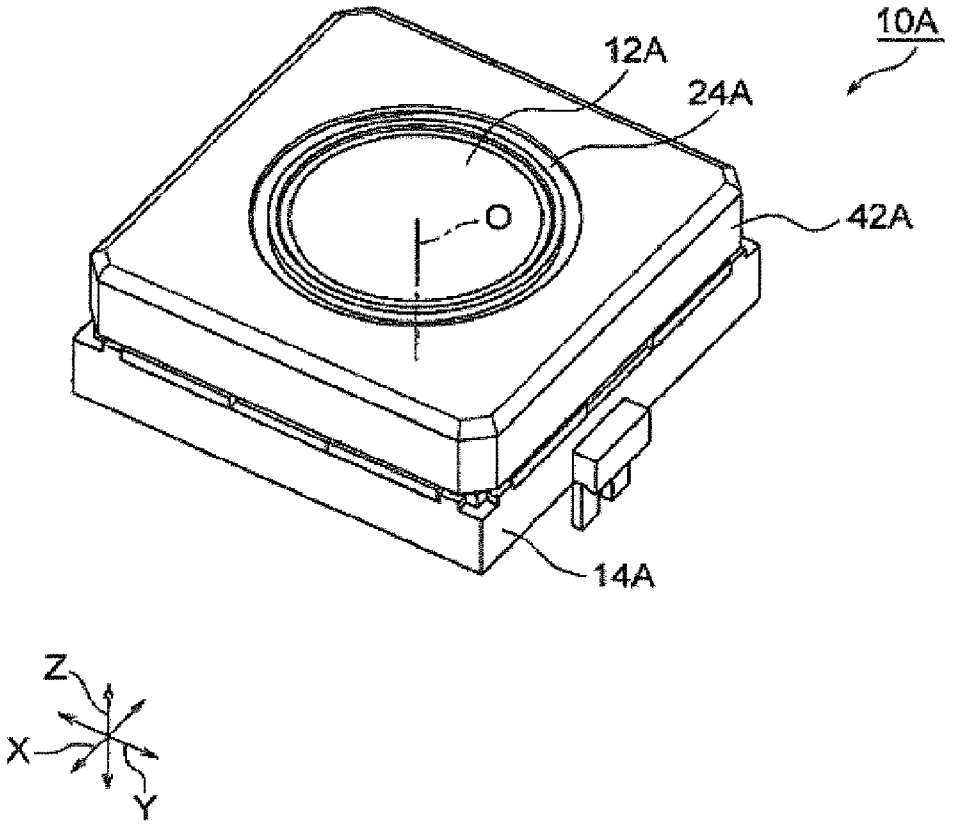

FIG.5

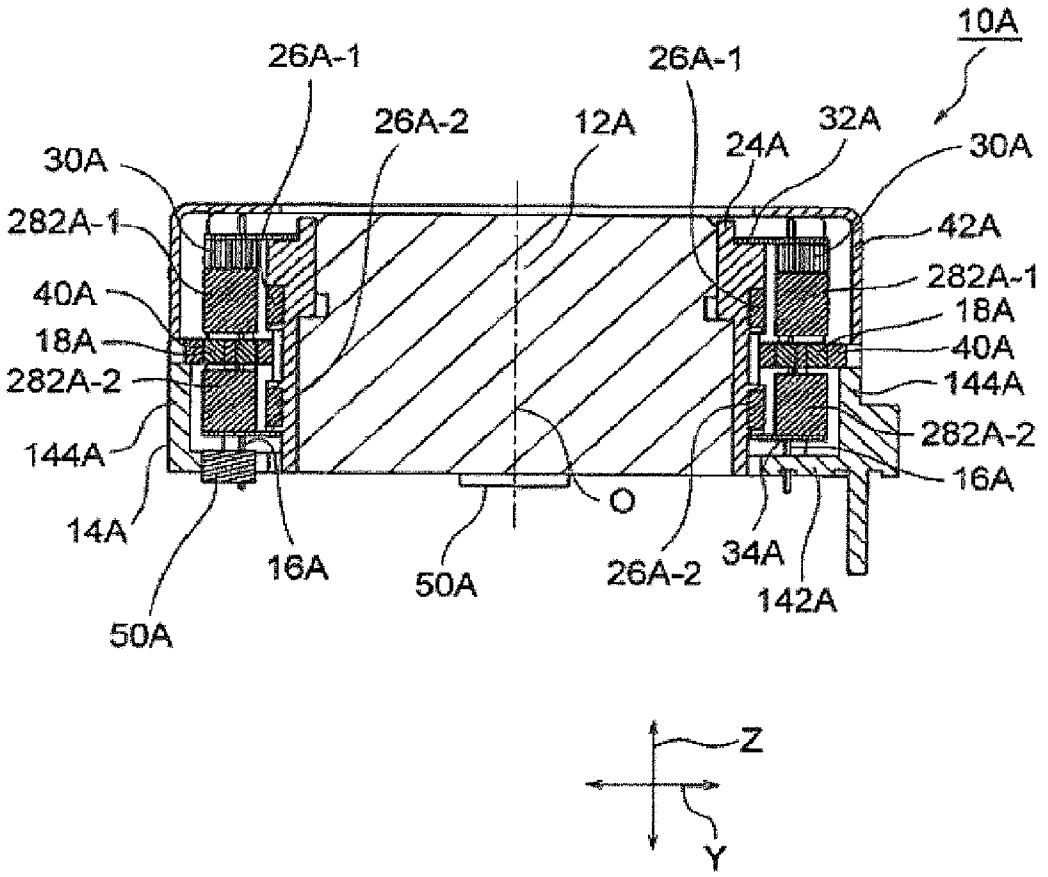
10A
26A-1
26A-1
26A-2
12A
24A
32A
30A
30A
282A-1
42A
40A
282A-1
18A
18A
40A
282A-2
144A
144A
282A-2
16A
14A
O
16A
50A
50A
26A-2
34A
142A
Z
Y

FIG.6

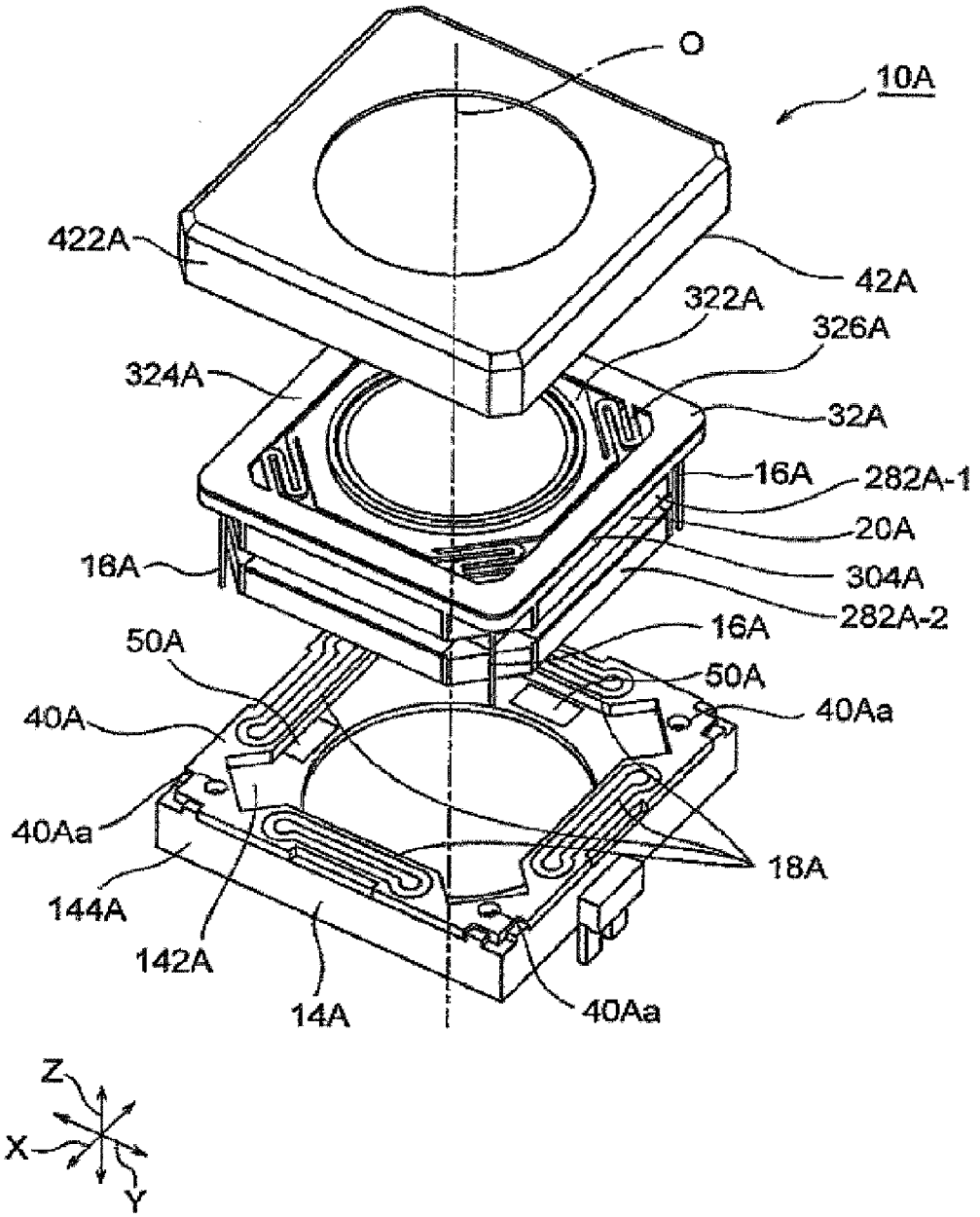
O
10A
422A
42A
322A
326A
324A
32A
16A
282A-1
20A
304A
16A
282A-2
16A
50A
50A
40A
40Aa
40Aa
18A
144A
142A
14A
40Aa
Z
X
Y

FIG.7

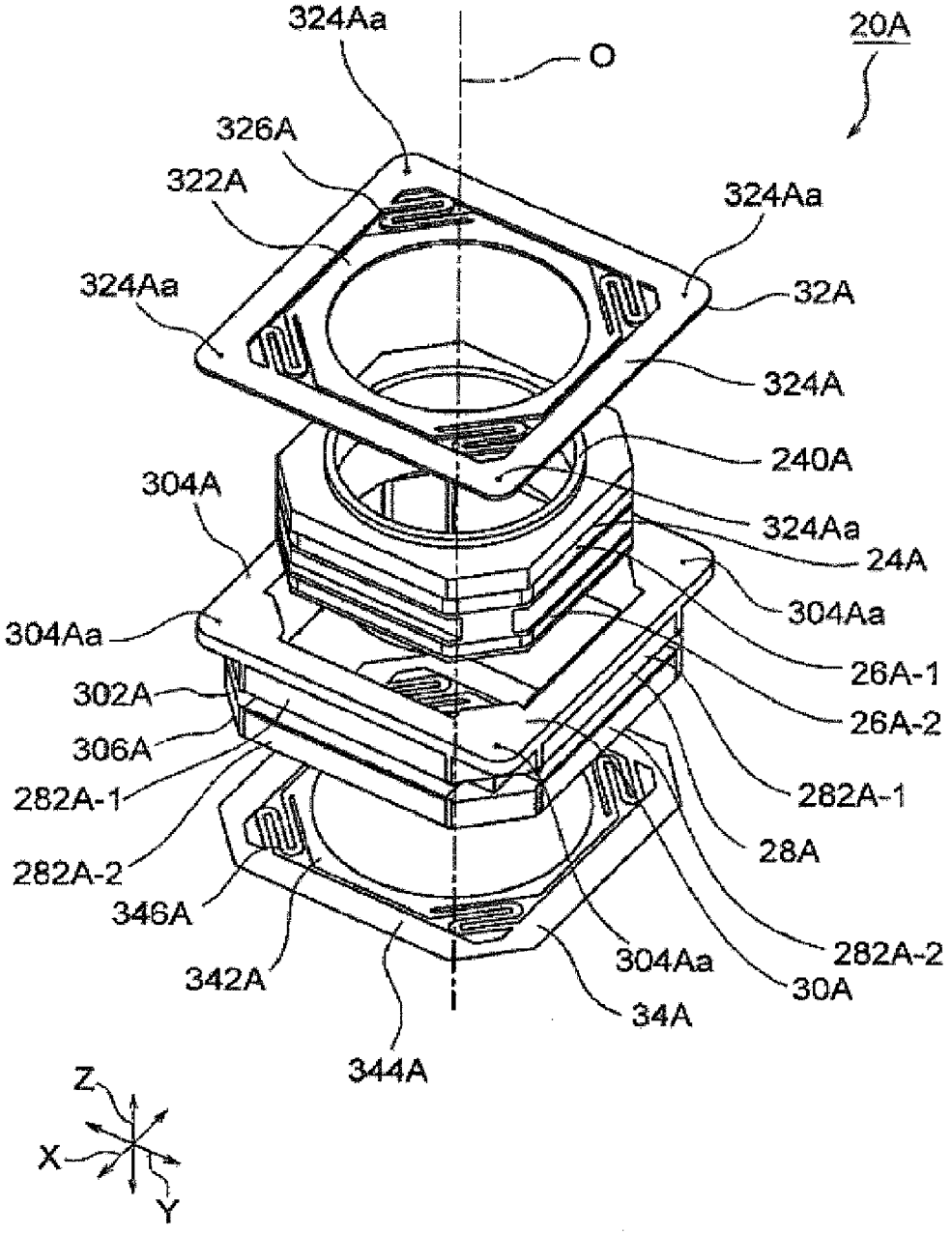
324Aa
O
20A
326A
322A
324Aa
324Aa
32A
324A
240A
304A
324Aa
24A
304Aa
304Aa
26A-1
302A
26A-2
306A
282A-1
282A-1
28A
282A-2
346A
304Aa
282A-2
342A
30A
34A
344A
Z
X
Y

FIG.8

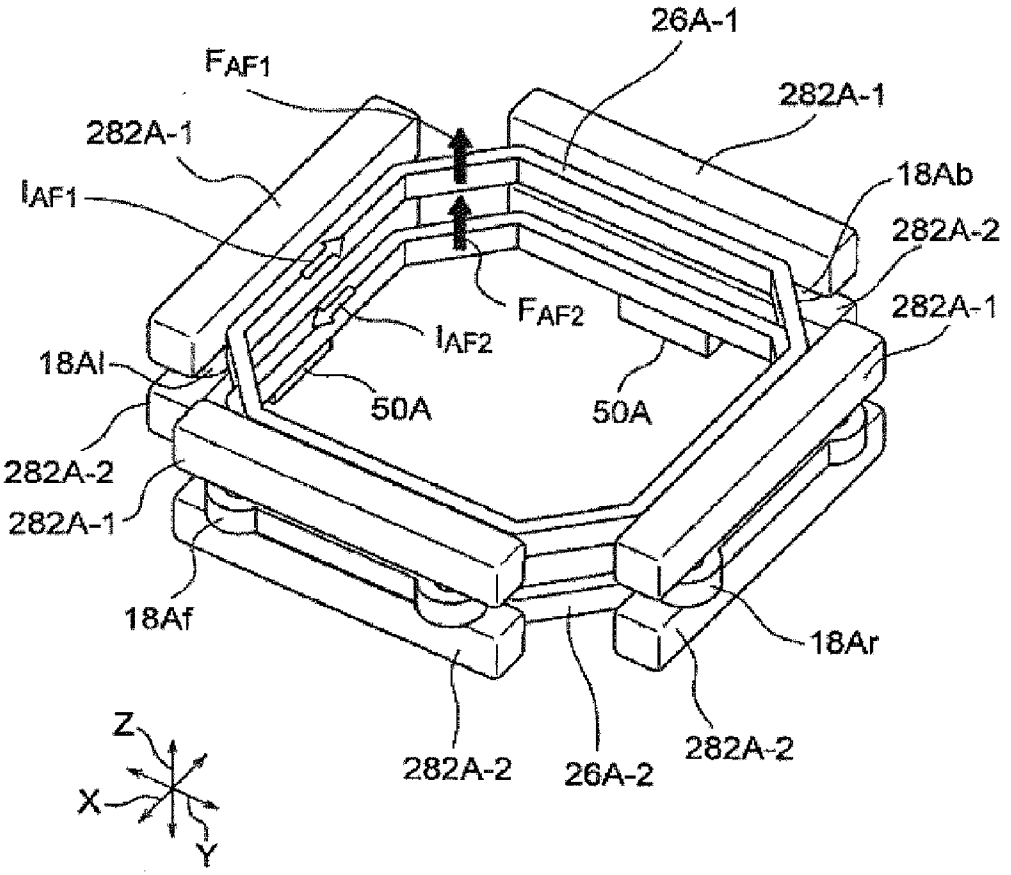
26A-1
FAF1
282A-1
282A-1
18Ab
IAF1
282A-2
FAF2
282A-1
IAF2
18Al
50A
50A
282A-2
282A-1
18Af
18Ar
Z
X
Y
282A-2
26A-2
282A-2

FIG.9

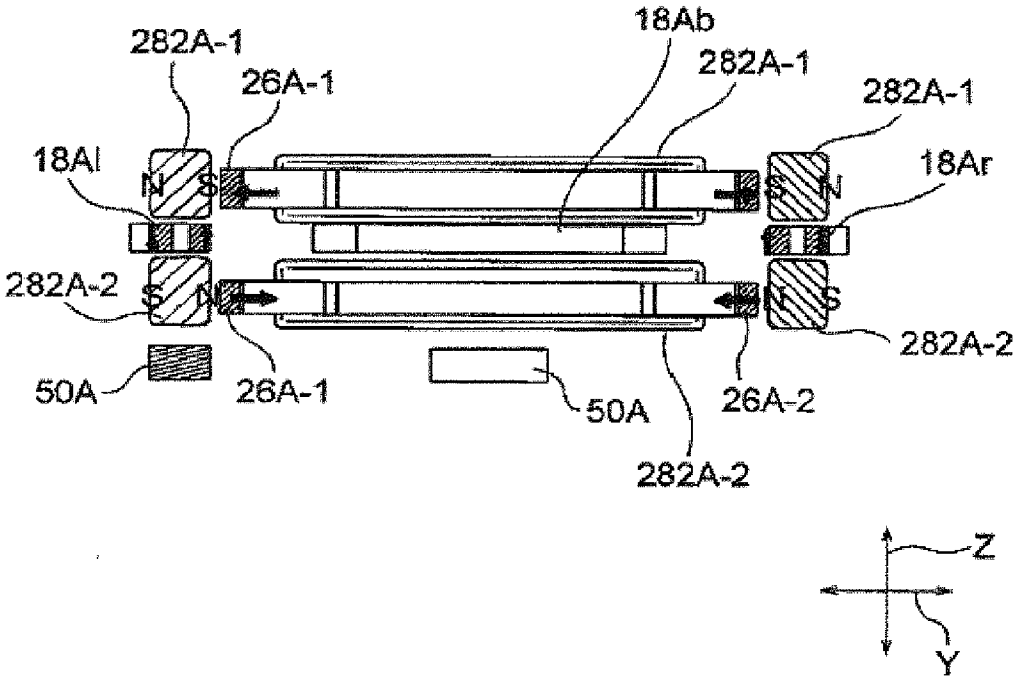
282A-1
26A-1
18Ab
282A-1
282A-1
18Al
18Ar
N
S
S
N
282A-2
S
N
N
S
282A-2
50A
26A-1
50A
26A-2
282A-2
Z
Y

FIG.10

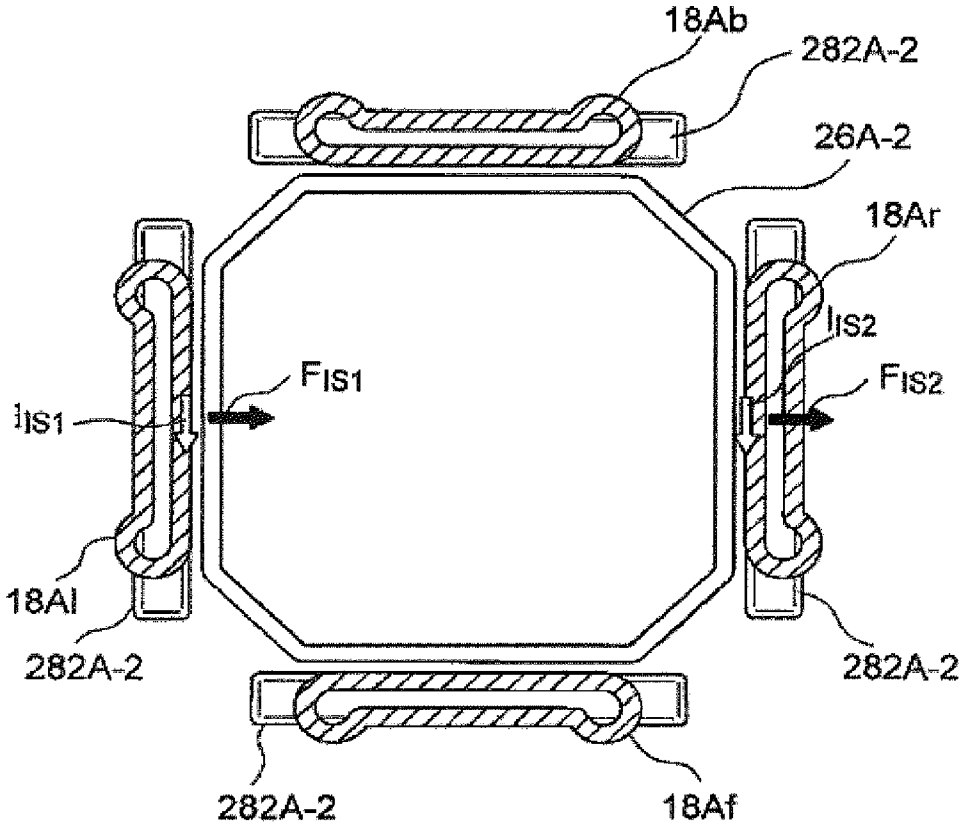
18Ab
282A-2
26A-2
18Ar
IIS2
FIS2
FIS1
IIS1
18Al
282A-2
282A-2
282A-2
18Af

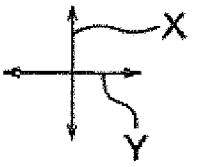
X
Y

FIG.11

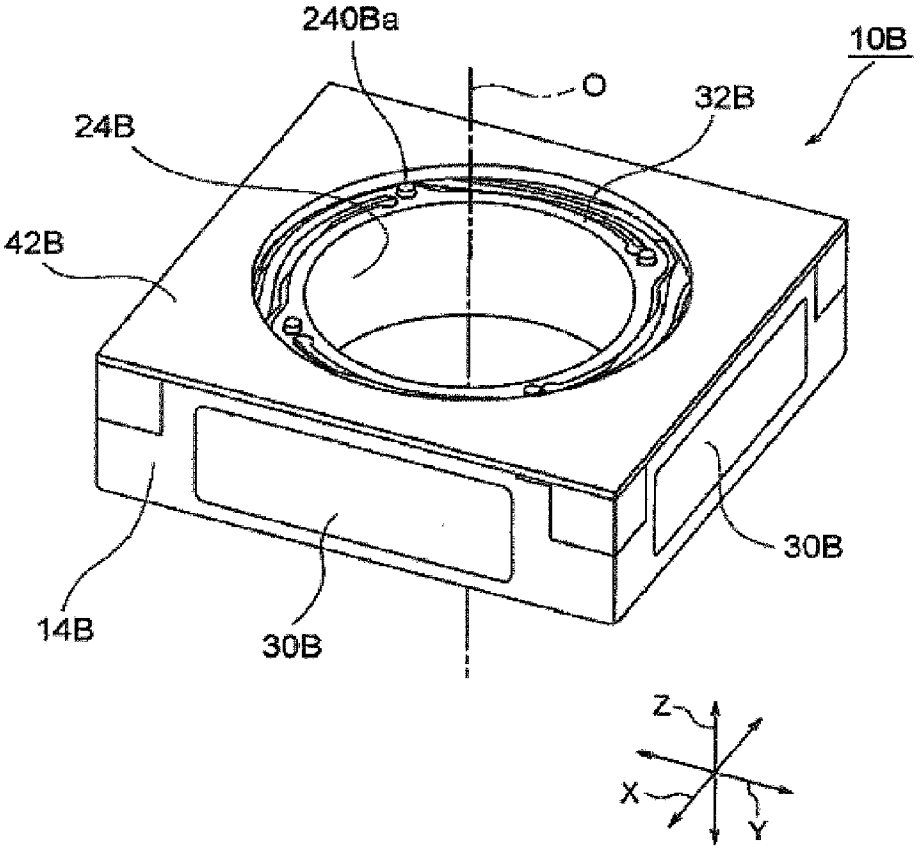

FIG.12

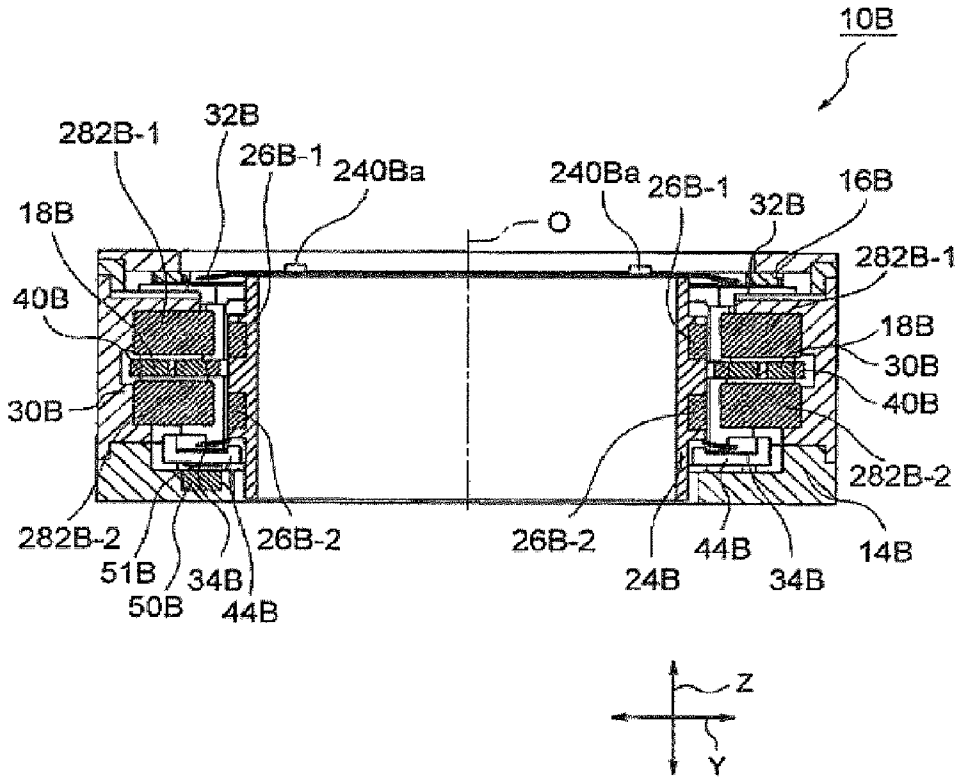
10B
282B-1
32B
26B-1
240Ba
240Ba
26B-1
32B
16B
18B
O
282B-1
40B
18B
30B
30B
40B
282B-2
282B-2
26B-2
26B-2
44B
14B
51B
34B
24B
34B
50B
44B
Z
Y

FIG.13

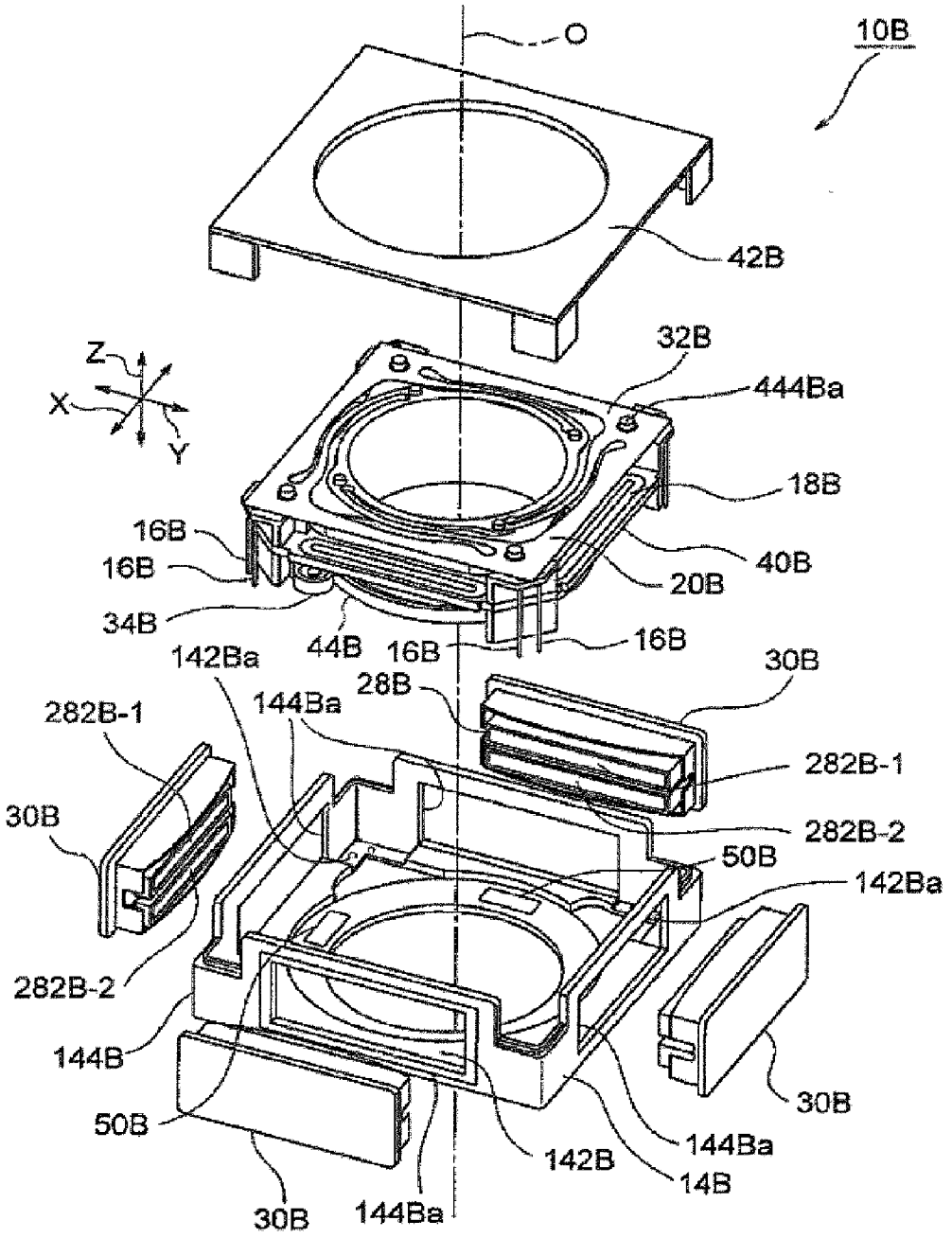
O
10B
42B
32B
444Ba
18B
40B
20B
16B
16B
34B
44B
16B
16B
142Ba
144Ba
28B
30B
282B-1
282B-1
282B-2
50B
142Ba
30B
282B-2
144B
50B
142B
144Ba
14B
30B
30B
144Ba
Z
X
Y

FIG.14

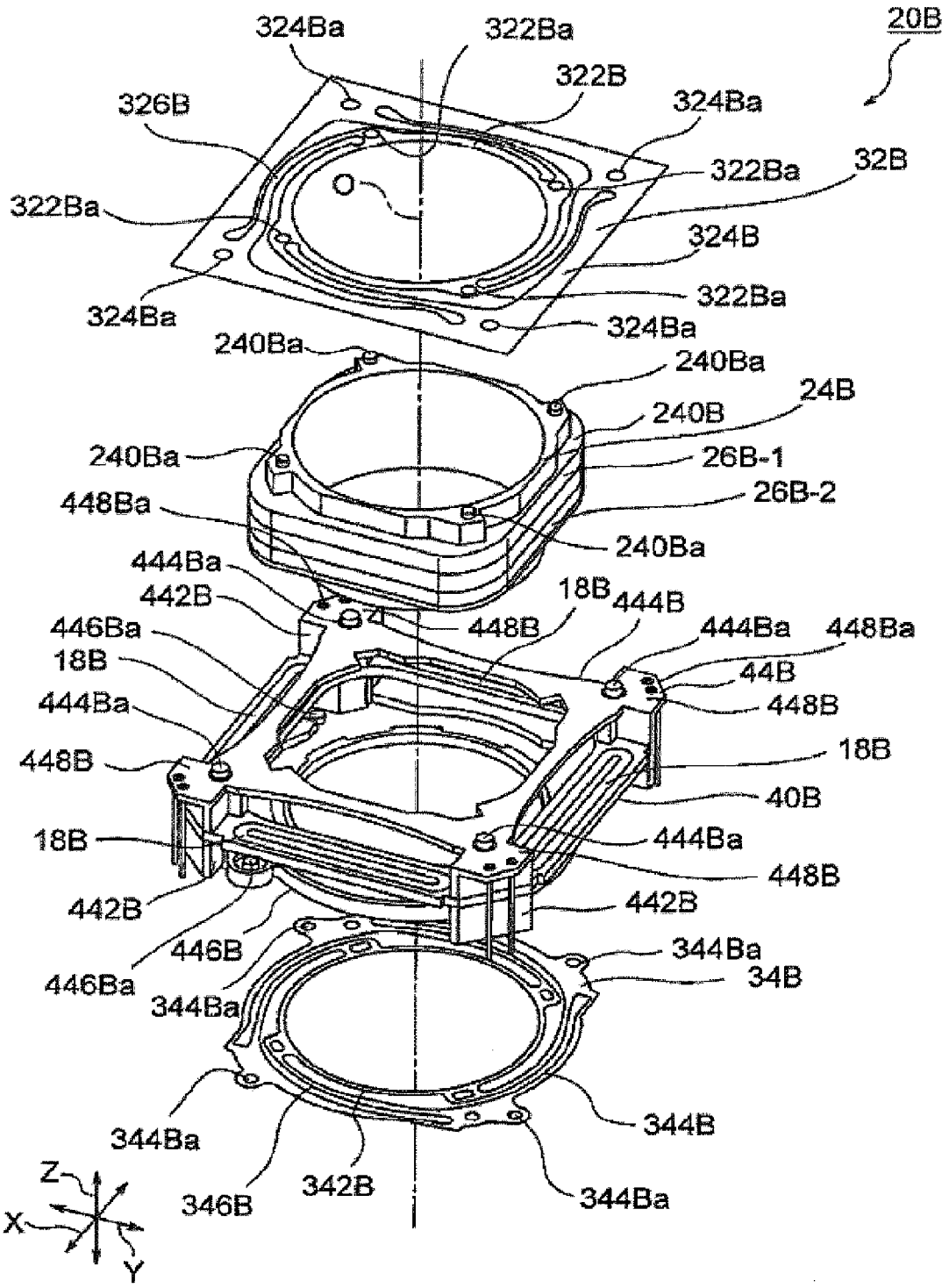
20B
324Ba
322Ba
322B
326B
324Ba
322Ba
32B
322Ba
O
324B
322Ba
324Ba
324Ba
240Ba
240Ba
24B
240B
240Ba
26B-1
26B-2
448Ba
240Ba
444Ba
442B
18B
444B
446Ba
448B
444Ba
448Ba
18B
44B
444Ba
448B
448B
18B
40B
18B
444Ba
448B
442B
442B
446B
344Ba
446Ba
34B
344Ba
344Ba
344B
346B
342B
344Ba
Z
X
Y

FIG.15

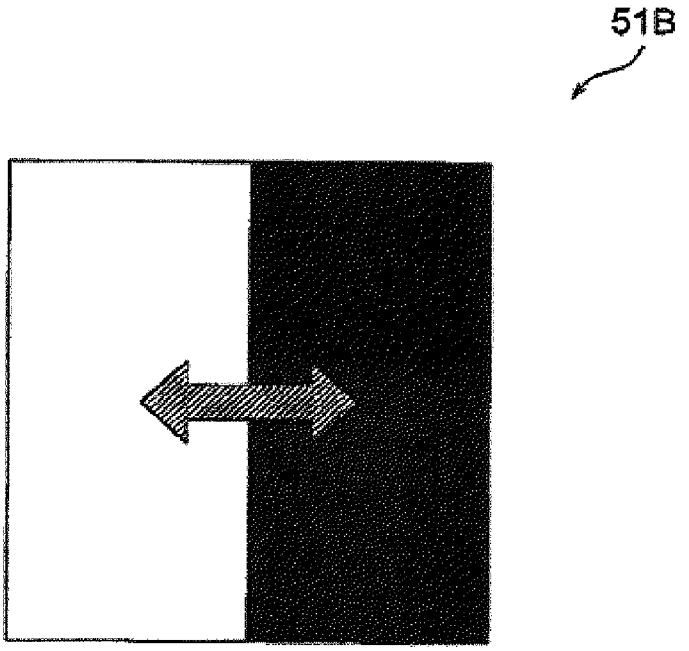

FIG.16

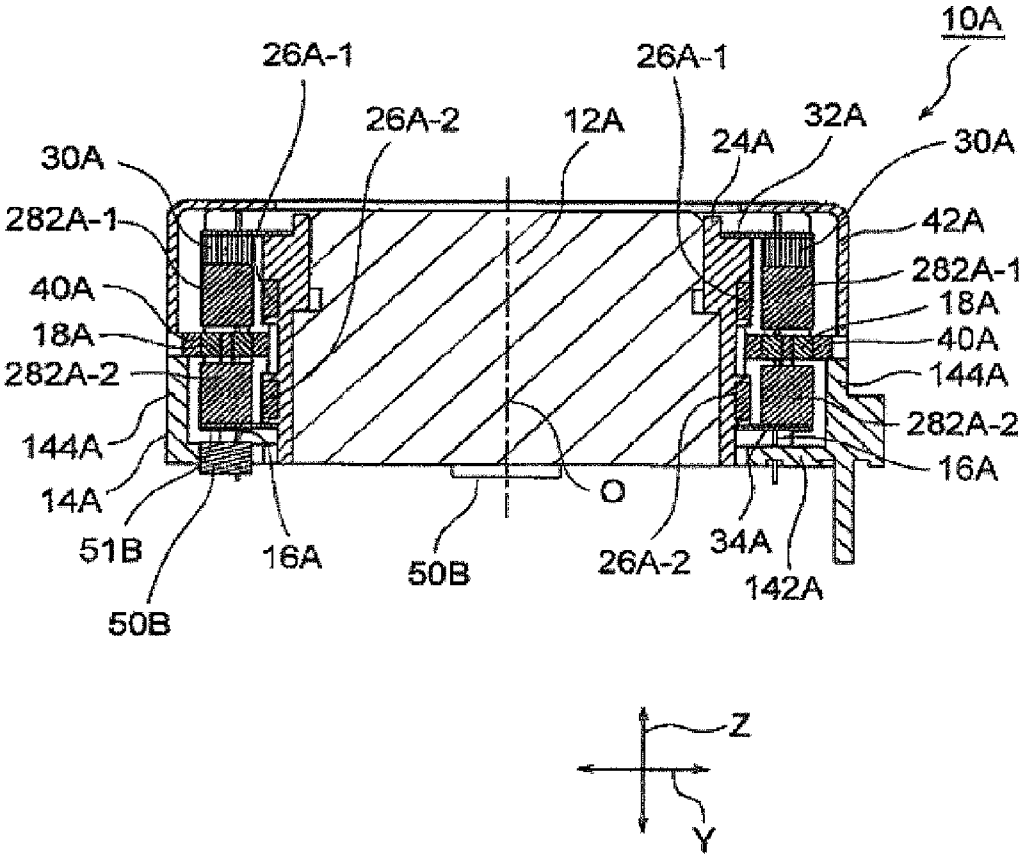
10A
26A-1
26A-1
26A-2
12A
24A
32A
30A
30A
282A-1
42A
282A-1
40A
18A
18A
40A
282A-2
144A
144A
282A-2
16A
14A
51B
50B
16A
50B
O
26A-2
34A
142A
Z
Y

FIG.17

LENS DRIVE APPARATUS, CAMERA MODULE AND CAMERA

CROSS-REFERENCE TO THE RELATED APPLICATION

[0001] The present application is a Continuation Application of application Ser. No. 13/390,603, filed Feb. 15, 2012, which claims priority from PCT/JP2010/063683, filed Aug. 12, 2010, the contents of which are incorporated herein by reference.

TECHNICAL FIELD

[0002] The present invention relates to a camera-shake correction apparatus, and more particularly to a camera-shake correction apparatus that corrects camera shake (vibration) that occurs when a still image is captured with a small camera for mobile phone use, and enables a blur-free image to be captured.

BACKGROUND OF THE INVENTION

[0003] Various camera-shake correction apparatuses (image blurring correction apparatuses) have hitherto been proposed that enable blurring on an imaging surface to be prevented and sharp imaging to be achieved despite the occurrence of camera shake (vibration) when a still image is captured.

[0004] Optical methods such as a sensor shifting method and lens shifting method, and software methods in which camera shake is corrected by image processing by means of software, are known as camera-shake correction methods.

[0005] A sensor shifting method is disclosed in Patent 2004-274242 (Patent Literature 1), for example. A digital camera disclosed in Patent Literature 1 has a configuration in which an imaging device (CCD) is movable centered on a reference position (center) by means of an actuator. The actuator performs camera-shake correction by moving a CCD according to camera shake detected by a vibration sensor. The CCD is located in a CCD moving section. The CCD can be moved by means of the CCD moving section within an XY plane perpendicular to a Z axis. The CCD moving section comprises three main members: a base plate fixed to a housing, a first slider that moves in the X-axis direction with respect to the base plate, and a second slider that moves in the Y-axis direction with respect to the base plate.

[0006] In a sensor shifting method such as disclosed in Patent Literature 1, the CCD moving section (movable mechanism) is large. Consequently, it is difficult to apply a sensor-shifting type of camera-shake correction apparatus to a small camera for mobile phone use from a size (external shape and height) standpoint.

[0007] Next, lens shifting methods will be described.

[0008] Patent 2009-145771 (Patent Literature 2), for example, discloses a camera-shake correction apparatus that includes a camera-shake correction unit that drives a corrective lens. The camera-shake correction unit is provided with a base plate, which is a fixed member, a movable lens barrel that holds the corrective lens in a movable fashion, three spheres held between the base plate and the movable lens barrel, a plurality of elastic bodies supporting the movable lens barrel elastically against the base plate, two coils fixed to the base plate, and two magnets fixed to the movable lens barrel.

[0009] Also, Patent 2006-65352 (Patent Literature 3) discloses an "image blurring correction apparatus" that corrects image blurring by controlling the movement of a specific lens group (hereinafter referred to as "corrective lens") in an imaging optical system (image formation optical system) comprising a plurality of lens groups in two directions perpendicular to each other in a plane perpendicular to the optical axis. In the image blurring correction apparatus disclosed in Patent Literature 3, the corrective lens is supported so as to be able to move vertically (in the pitch direction) and laterally (in the yaw direction) with respect to a fixed frame via a pitching movement frame and yawing movement frame.

[0010] Patent 2008-26634 (Patent Literature 4) discloses a "camera-shake correction unit" that includes a corrective optical member that corrects blurring of an image formed by an imaging optical system by moving in a direction that intersects the optical axis of the imaging optical system. In the case of a corrective optical member disclosed in Patent Literature 4, a lens holding frame that holds a corrective lens is supported so as to be able to move in the pitch direction and yaw direction with respect to a housing barrel via a pitch slider and yaw slider.

[0011] Patent 2006-215095 (Patent Literature 5) discloses an "image blurring correction apparatus" that can move a corrective lens by means of a small driving force, and can perform fast and high-precision image blurring correction. The image blurring correction apparatus disclosed in Patent Literature 5 is provided with a holding frame that holds a corrective lens, a first slider that supports this holding frame so as to be able to slide in a first direction (pitch direction), a second slider that supports the holding frame so as to be able to slide in a second direction (yaw direction), a first coil motor that drives the first slider in the first direction, and a second coil motor that drives the second slider in the second direction.

[0012] Patent 2008-15159 (Patent Literature 6) discloses a lens barrel provided with a camera-shake correction optical system installed so as to be able to move in a direction perpendicular to the optical axis. In the camera-shake correction optical system disclosed in Patent Literature 6, a movable VR unit located inside a VR body unit holds a corrective lens (a third lens group), and is installed so as to be able to move within an XY plane perpendicular to the optical axis.

[0013] Patent 2007-212876 (Patent Literature 7) discloses an "image blurring correction apparatus" in which image blurring can be corrected by making a corrective lens held in a movable frame movable in mutually perpendicular first and second directions with respect to the optical axis of the lens system, and controlling the optical axis of the corrective lens by means of a drive section so as to coincide with the optical axis of the lens system.

[0014] Patent 2007-17957 (Patent Literature 8) discloses an "image blurring correction apparatus" that corrects image blurring by driving a corrective lens for correcting blurring of an image formed by a lens system by means of operation of a lens drive section in a first direction and second direction that are directions perpendicular to the optical axis of the lens system and also mutually perpendicular. In the image blurring correction apparatus disclosed in Patent Literature 8, the lens drive section is provided located toward a direction perpendicular to the optical axis of the corrective lens.

[0015] Patent 2007-17874 (Patent Literature 9) discloses an "image blurring correction apparatus" in which image blurring can be corrected by making a corrective lens held in a movable frame movable in a first direction and second direction that are directions perpendicular to the optical axis

of the lens system and also mutually perpendicular, and controlling the optical axis of the corrective lens so as to coincide with the optical axis of the lens system. This image blurring correction apparatus disclosed in Patent Literature 9 is provided with a drive section having a coil and magnet that are made movable in a relative fashion. Either the coil or the magnet is fixed to a movable frame, and the other is fixed to a supporting frame that supports the movable frame in a movable fashion. Also, this image blurring correction apparatus disclosed in Patent Literature 9 is provided with a first Hall device that detects position information relating to a first direction of the corrective lens by detecting magnetic force of the magnet, and a second Hall device that detects position information relating to a second direction of the corrective lens by detecting magnetic force of the magnet.

[0016] The lens-shifting types of image blurring correction apparatuses (camera-shake correction apparatuses) disclosed in above Patent Literature 2 through 9 all have a structure whereby a corrective lens is adjusted by being moved in a plane perpendicular to the optical axis. Therefore, a problem with an image blurring correction apparatus (camera-shake correction apparatus) having such a structure is that its structure is complex and it is not suitable for miniaturization. That is to say, as with an above-described sensor-shifting type of camera-shake correction apparatus, it is difficult to apply a lens-shifting type of camera-shake correction apparatus to a small camera for mobile phone use from a size (external shape and height) standpoint.

[0017] A software method is disclosed, for example, in Patent HEI11-64905 (Patent Literature 10). In the method disclosed in Patent Literature 10, a captured image is made static when an imaging apparatus becomes static and free from camera shake by eliminating a noise component from detection section detection results, and calculating specific information necessary for correction of image blurring due to shaking of the imaging apparatus from a detection signal from which this noise component has been eliminated.

[0018] However, a problem with this software method disclosed in Patent Literature 10 is that image quality degrades in comparison with an above-described optical method. Also, a software method has the disadvantage of taking a long time, since it includes both imaging time and software processing time.

[0019] In order to solve the above problems, a camera-shake correction apparatus (image blurring correction apparatus) has been proposed that corrects camera shake (image blurring) by shaking an actual lens module (camera module) that holds a lens and imaging device (image sensor). Such a method will be referred to here as an "optical unit tilting method."

[0020] "Optical unit tilting methods" will now be described.

[0021] Patent 2007-41455 (Patent Literature 11), for example, discloses an "optical apparatus image blurring correction apparatus" that is provided with a lens module that holds a lens and imaging device, a frame structure that supports this lens module so as to be rotatable by means of a rotation shaft, a drive section (actuator) that rotates the lens module with respect to the frame structure by providing driving force to a driven section (rotor) of the rotation shaft, and a force application section (leaf spring) that forces the drive section (actuator) against the driven section (rotor) of the rotation shaft. The frame structure comprises an inner frame and outer frame. The drive section (actuator) is disposed so as to come into contact with the driven section (rotor) of the rotation shaft from a direction perpendicular to the optical axis. The drive section (actuator) comprises a piezoelectric device and a rotation-shaft-side operating section. The operating section drives the rotation shaft by means of vertical oscillation and flexion oscillation of the piezoelectric device.

[0022] Also, Patent 2007-93953 (Patent Literature 12) discloses a "camera-shake correction apparatus" in which a camera module integrating an imaging lens and image sensor is housed in a housing, and the camera module is pivoted in the housing so as to be able to rock freely about a first shaft and second shaft that are perpendicular to the imaging optical axis and intersect each other at right angles, and camera shake during still image capture is corrected by controlling the overall attitude of the camera module within the housing according to shaking of the housing detected by a camera-shake sensor. The camera-shake correction apparatus disclosed in Patent Literature 12 is provided with a center frame that supports the inner frame to which the camera module is fixed so as to be able to rock freely about the first shaft from the outside thereof, an outer frame that is fixed to the housing and supports the center frame so as to be able to rock about the second shaft from the outside thereof, a first drive section that is incorporated into the center frame and rocks the inner frame about the first shaft according to a camera-shake signal from a camera-shake sensor (first sensor module that detects camera shake in the pitch direction), and a second drive section that is incorporated into the outer frame and rocks the center frame about the second shaft according to a camera-shake signal from a camera-shake sensor (second sensor module that detects camera shake in the yaw direction). The first drive section comprises a first stepping motor, a first reduction gear train that decelerates the rotation thereof, and a first cam that rotates integrally with a final gear and rocks the inner frame via a first cam follower provided on the inner frame. The second drive section comprises a second stepping motor, a second reduction gear train that decelerates the rotation thereof, and a second cam that rotates integrally with a final gear and rocks the center frame via a second cam follower provided on the center frame.

[0023] Furthermore, Patent 2009-288770 (Patent Literature 13) discloses an "imaging optical apparatus" capable of dependably correcting shaking by improving the configuration of an imaging unit drive mechanism for shake correction for the imaging unit. The imaging optical apparatus disclosed in Patent Literature 13 comprises, on the inside of a fixed cover, an imaging unit (movable module), and a shake correction mechanism for performing shake correction by displacing this imaging unit. The imaging unit is for moving a lens in the optical axis direction. The imaging unit comprises a movable body that holds a lens and fixed diaphragm on the inside, a lens drive mechanism that moves this movable body in the optical axis direction, and a support on which the lens drive mechanism and movable body are mounted. The lens drive mechanism is provided with a lens drive coil, lens drive magnet, and yoke. The imaging unit is supported by a fixed body by means of four suspension wires. At two places on either side of the optical axis are provided a first imaging unit drive mechanism and second imaging unit drive mechanism for shake correction, the two of which form a pair. In these imaging unit drive mechanisms, an imaging unit drive magnet is held on the movable body side, and an imaging unit drive coil is held on the fixed body side.

[0024] Patent 2007-142938 (Patent Literature 14) discloses a portable information terminal having a function for correcting camera shake during imaging using a gyroscope or such-like angular velocity sensor. In order to perform correction of captured image shake, it is necessary to set a reference pitch axis and yaw axis that are mutually perpendicular in a plane that is perpendicular to the optical axis of a camera lens, and detect the angular velocity of both rotation with the pitch axis as the central axis of rotation and rotation with the yaw axis as the central axis of rotation. Patent Literature 14 discloses the disposition of a first gyroscope that detects the rotational angular velocity of rotation about the pitch axis, and a second gyroscope that detects the rotational angular velocity of rotation about the yaw axis, on a side surface of an imaging apparatus.

[0025] Also, Patent 2008-20668 (Patent Literature 15) discloses a lens drive apparatus that drives a lens in the optical axis direction. This lens drive apparatus disclosed in Patent Literature 15 is provided with a plurality of coiled bodies fixed to the outer periphery of a lens support, and a magnet section disposed facing the coiled bodies. The magnet section is provided with magnetic poles N and S that are polarized into an N pole and S pole in a radial direction and differ in the lens optical axis direction. The coiled bodies are provided corresponding to the polarity of the magnet section, and currents flow in mutually opposite directions in adjacent coiled bodies.

CITATION LIST

Patent Literature

[0026] PTL 1
[0027] Patent 2004-274242
[0028] PTL 2
[0029] Patent 2009-145771
[0030] PTL 3
[0031] Patent 2006-65352
[0032] PTL 4
[0033] Patent 2008-26634
[0034] PTL 5
[0035] Patent 2006-215095
[0036] PTL 6
[0037] Patent 2008-15159
[0038] PTL 7
[0039] Patent 2007-212876
[0040] PTL 8
[0041] Patent 2007-17957
[0042] PTL 9
[0043] Patent 2007-17874
[0044] PTL 10
[0045] Patent HEI11-64905
[0046] PTL 11
[0047] Patent 2007-41455
[0048] PTL 12
[0049] Patent 2007-93953
[0050] PTL 13
[0051] Patent 2009-288770 (FIG. 1 through FIG. 5)
[0052] PTL 14
[0053] Patent 2007-142938 (Paragraph 0005, Paragraph 0006, FIG. 2)
[0054] PTL 15
[0055] Patent 2008-20668

SUMMARY OF INVENTION

Technical Problem

[0056] The "sensor-shifting" camera-shake correction apparatus disclosed in above Patent Literature 1 has a large CCD moving section (movable mechanism), and is therefore difficult to apply to a small camera for mobile phone use from a size (external shape and height) standpoint.

[0057] On the other hand, the "lens-shifting" image blurring correction apparatuses (camera-shake correction apparatuses) disclosed in above Patent Literature 2 through 9 all have a structure whereby a corrective lens is adjusted by being moved in a plane perpendicular to the optical axis, and there is therefore a problem in that their structure is complex and is not suitable for miniaturization.

[0058] The "software-type" camera-shake correction method disclosed in Patent Literature 10 has a problem of image quality degrading in comparison with an optical type, and also has the disadvantage of taking a long time, since it includes both imaging time and software processing time.

[0059] On the other hand, the "optical-unit-tilting" image blurring correction apparatus disclosed in Patent Literature 11 requires the lens module to be covered with a frame structure comprising an inner frame and outer frame. Also, the "optical-unit-tilting" image blurring correction apparatus disclosed in Patent Literature 12 requires the camera module to be covered with an inner frame, center frame, and outer frame. As a result, the camera-shake correction apparatus is large in size. Furthermore, with an "optical unit tilting method," there is a rotation shaft, and there is consequently also a problem of the occurrence of friction between a hole and shaft, and the occurrence of hysteresis. The "optical-unit-tilting" imaging optical apparatus disclosed in Patent Literature 13 requires a magnet for imaging unit drive in addition to a magnet for lens drive. As a result, there is a problem of the imaging optical apparatus being large in size.

[0060] The portable information terminal disclosed in Patent Literature 14 only discloses the use of an angular velocity sensor such as a gyroscope as a camera-shake sensor.

[0061] Also, Patent Literature 15 simply discloses a lens drive apparatus that drives a lens in the optical axis direction.

[0062] Therefore, the technical problem to be solved by the present invention is to provide a small, low-profile camera-shake correction apparatus.

[0063] Other objects of the present invention will become clear as the description proceeds.

Solution to Problem

[0064] To state the main point of a typical aspect of the present invention, a camera-shake correction apparatus corrects camera shake by moving all or a moving part of an auto-focusing lens drive apparatus for moving a lens barrel along the optical axis, in a first direction and a second direction that are perpendicular to the optical axis and are perpendicular to each other. The auto-focusing lens drive apparatus is provided with a focusing coil and a permanent magnet that is disposed on the radial-direction outside of this focusing coil with respect to the optical axis and facing the focusing coil. According to a typical aspect of the present invention, a camera-shake correction apparatus has: a base that is disposed so as to be spaced from the bottom surface of the auto-focusing lens drive apparatus; a plurality of suspension wires that each have one end fixed to the outer peripheral

section of this base, that extend along the optical axis, and that support the entire auto-focusing lens drive apparatus or a moving part thereof so as to be able to rock in the first direction and the second direction; and a camera-shake correction coil disposed so as to face the permanent magnet.

Advantageous Effects of Invention

[0065] The present invention uses a permanent magnet of an auto-focusing lens drive apparatus in common with that of a camera-shake correction apparatus, enabling a small size and low profile to be achieved.

BRIEF DESCRIPTION OF DRAWINGS

[0066] FIG. **1** is an exploded oblique view of a camera-shake correction apparatus according to a first embodiment of the present invention;

[0067] FIG. **2** is an exploded oblique view of auto-focusing lens drive apparatus **20** used in the camera-shake correction apparatus shown in FIG. **1**;

[0068] FIG. **3** is an assembled oblique view, excluding the cover, of the camera-shake correction apparatus shown in FIG. **1**;

[0069] FIG. **4** is a block diagram showing the configuration of a camera-shake correction actuator that controls the camera-shake correction apparatus shown in FIG. **1** through FIG. **3**;

[0070] FIG. **5** is an external oblique view of a camera-shake correction apparatus according to a second embodiment of the present invention;

[0071] FIG. **6** is a vertical cross-sectional view of the camera-shake correction apparatus shown in FIG. **5**;

[0072] FIG. **7** is an exploded oblique view of the camera-shake correction apparatus shown in FIG. **5**;

[0073] FIG. **8** is an exploded oblique view of an auto-focusing lens drive apparatus used in the camera-shake correction apparatus shown in FIG. **5**;

[0074] FIG. **9** is an oblique view of a magnetic circuit used in the camera-shake correction apparatus shown in FIG. **6** and FIG. **7**;

[0075] FIG. **10** is a vertical cross-sectional view of the magnetic circuit shown in FIG. **9**;

[0076] FIG. **11** is a plan view with four first permanent magnet sections and a first focusing coil omitted from the magnetic circuit shown in FIG. **9**;

[0077] FIG. **12** is an external oblique view of a camera-shake correction apparatus according to a third embodiment of the present invention;

[0078] FIG. **13** is a vertical cross-sectional view of the camera-shake correction apparatus shown in FIG. **12**;

[0079] FIG. **14** is an exploded oblique view of the camera-shake correction apparatus shown in FIG. **12**;

[0080] FIG. **15** is an exploded oblique view of a movable section of an auto-focusing lens drive apparatus used in the camera-shake correction apparatus shown in FIG. **12**;

[0081] FIG. **16** is a plan view of a position information section of a position detection section used in the camera-shake correction apparatus in FIG. **12**; and

[0082] FIG. **17** is a vertical cross-sectional view of a sample variant using an optical position detection section as a position detection section in the camera-shake correction apparatus shown in FIG. **6**.

DESCRIPTION OF EMBODIMENTS

[0083] Now, embodiments of the present invention will be described with reference to the accompanying drawings.

[0084] Camera-shake correction apparatus **10** according to a first embodiment of the present invention will now be described with reference to FIG. **1** through FIG. **3**. FIG. **1** is an exploded oblique view of camera-shake correction apparatus **10**. FIG. **2** is an exploded oblique view of auto-focusing lens drive apparatus **20** used in camera-shake correction apparatus **10** shown in FIG. **1**. FIG. **3** is an assembled oblique view, excluding shield cover **42**, of camera-shake correction apparatus **10** shown in FIG. **1**.

[0085] Here, orthogonal coordinate system (X,Y,Z) is used, as shown in FIG. **1** through FIG. **3**. In the states illustrated in FIG. **1** through FIG. **3**, in orthogonal coordinate system (X,Y,Z), the X-axis direction is the front-back direction (depth direction), the Y-axis direction is the horizontal direction (width direction), and the Z-axis direction is the vertical-direction (height direction). In the examples shown in FIG. **1** through FIG. **3**, vertical direction Z is the lens optical axis O direction. In this first embodiment, the X-axis direction (front-back direction) is also referred to as the first direction, and the Y-axis direction (horizontal direction) is also referred to as the second direction.

[0086] In an actual usage situation, the optical axis O direction—that is, the Z-axis direction—is the front-back direction. In other words, the upward Z-axis direction is the forward direction, and the downward Z-axis direction is the rearward direction.

[0087] Camera-shake correction apparatus **10** illustrated is an apparatus that corrects camera shake (vibration) that occurs when a still image is captured with a small camera for mobile phone use, and enables a blur-free image to be captured. Camera-shake correction apparatus **10** corrects camera shake by moving the entirety of auto-focusing lens drive apparatus **20** in first direction (front-back direction) X and second direction (horizontal direction) Y that are perpendicular to optical axis O and are perpendicular to each other.

[0088] Auto-focusing lens drive apparatus **20** is for moving lens barrel **12** along optical axis O. Base printed wiring board (base) **14** is disposed so as to be spaced from the bottom surface of auto-focusing lens drive apparatus **20**. Although not illustrated, an imaging device disposed on an imaging board is mounted on the bottom (rear part) of this base printed wiring board **14**. This imaging device captures a subject image formed by means of lens barrel **12**, and converts this subject image to an electrical signal. The imaging device comprises, for example, a CCD (charge coupled device) image sensor, CMOS (complementary metal oxide semiconductor) image sensor, or the like. Therefore, a camera module is configured by combining lens drive apparatus **20**, an imaging board, and an imaging device.

[0089] Auto-focusing lens drive apparatus **20** will now be described with reference to FIG. **2**.

[0090] Auto-focusing lens drive apparatus **20** is provided with lens holder **24** having tubular section **240** for holding lens barrel **12**, focusing coil **26** fixed to this lens holder **24** so as to be positioned around tubular section **240**, magnet holder **30** that holds permanent magnet **28** disposed on the outside of this focusing coil **26**, facing focusing coil **26**, and a pair of leaf springs **32** and **34** provided on either side of optical axis O of tubular section **240** of lens holder **24**. The pair of leaf springs **32** and **34** support lens holder **24** so as to be displaceable in the optical axis O direction when lens holder **24** is positioned in

a radial direction. Of the pair of leaf springs **32** and **34**, leaf spring **32** is referred to as the upper leaf spring, and leaf spring **34** is referred to as the lower leaf spring.

[0091] As stated above, in an actual usage situation, the upward Z-axis direction (optical axis O direction) is the forward direction, and the downward Z-axis direction (optical axis O direction) is the rearward direction. Therefore, upper leaf spring **32** is also referred to as the front spring, and lower leaf spring **34** is also referred to as the rear spring.

[0092] Magnet holder **30** is of octagonally tubular shape. That is to say, magnet holder **30** has octagonally tubular outer tube section **302**, octagonal upper ring-shaped end section **304** provided on the top (front) of this outer tube section **302**, and octagonal lower ring-shaped end **306** provided on the bottom (rear) of outer tube section **302**. Upper ring-shaped end section **304** has eight upper projections **304***a* projecting upward, and lower ring-shaped end **306** has eight lower projections **306***a* projecting downward.

[0093] Focusing coil **26** is of octagonally tubular shape matching the shape of octagonally tubular magnet holder **30**. Permanent magnet **28** includes four permanent magnet sections **282** disposed on octagonally tubular outer tube section **302** of magnet holder **30** so as to be spaced from each other in first direction (front-back direction) X and second direction (horizontal direction) Y. In any event, permanent magnet **28** is disposed spaced from focusing coil **26**.

[0094] Upper leaf spring (front spring) **32** is disposed above (forward) in the optical axis O direction in lens holder **24**, and lower leaf spring (rear spring) **34** is disposed below (rearward) in the optical axis O direction in lens holder **24**. Upper leaf spring (front spring) **32** and lower leaf spring (rear spring) **34** have almost identical configurations.

[0095] Upper leaf spring (front spring) **32** has upper inner ring section **322** attached to the top of lens holder **24**, and upper outer ring section **324** attached to upper ring-shaped end section **304** of magnet holder **30**. Four upper arm sections **326** are provided between upper inner ring section **322** and upper outer ring section **324**. That is to say, four upper arm sections **326** link upper inner ring section **322** and upper outer ring section **324**.

[0096] Upper outer ring section **324** has eight engaging notches **324***a* that engage respectively with eight upper projections **304***a* of magnet holder **30**. Ring-shaped upper printed wiring board (upper board) **36** is disposed on the top of upper leaf spring (front spring) **32**. Upper printed wiring board (upper board) **36** has eight upper board holes **36***a* into which eight upper projections **304***a* of magnet holder **30** are pressed (inserted) respectively. That is to say, eight upper projections **304***a* of magnet holder **30** are pressed (inserted) respectively into eight upper board holes **36***a* of ring-shaped upper printed wiring board (upper board) **36** via eight engaging notches **324***a* of upper outer ring section **324**. That is to say, upper outer ring section **324** of upper leaf spring (front spring) **32** is fixed by being sandwiched between upper ring-shaped end section **304** of magnet holder **30** and ring-shaped upper printed wiring board **36**.

[0097] Similarly, lower leaf spring (rear spring) **34** has a lower inner ring section (not illustrated) attached to the bottom of lens holder **24**, and lower outer ring section **344** attached to lower ring-shaped end **306** of magnet holder **30**. Four lower arm sections (not illustrated) are provided between the lower inner ring section and lower outer ring section **344**. That is to say, four lower arm sections link the lower inner ring section and lower outer ring section **344**.

[0098] Lower outer ring section **344** has eight lower engaging notches **344***a* that engage respectively with eight lower projections **306***a* of magnet holder **30**. Ring-shaped stopper **38** is disposed on the bottom of lower leaf spring (rear spring) **34**. Stopper **38** has eight stopper notches **38***a* into which eight lower projections **306***a* of magnet holder **30** are pressed (inserted) respectively. That is to say, eight lower projections **306***a* of magnet holder **30** are pressed (inserted) respectively into eight stopper notches **38***a* of stopper **38** via eight engaging notches **344***a* of lower outer ring section **344**. That is to say, lower outer ring section **344** of lower leaf spring (rear spring) **34** is fixed by being sandwiched between lower ring-shaped end **306** of magnet holder **30** and stopper **38**.

[0099] The elastic members comprising upper leaf spring **32** and lower leaf spring **34** function as guide sections that guide lens holder **24** so as to be able to move only in the optical axis O direction. Upper leaf spring **32** and lower leaf spring **34** are made of beryllium copper, phosphor bronze, or the like.

[0100] Internal thread **242** is cut into the inner peripheral wall of tubular section **240** of lens holder **24**, and external thread **122** that is screwed into above internal thread **242** is cut into the outer peripheral wall of lens barrel **12**. Therefore, to fit lens barrel **12** into lens holder **24**, lens barrel **12** is accommodated inside lens holder **24** by turning lens barrel **12** about optical axis O and screwing lens barrel **12** into tubular section **240** of lens holder **24** in the optical axis O direction, and they are joined together by means of adhesive or the like.

[0101] By passing a current through focusing coil **26**, it is possible to adjust the position of lens holder **24** (lens barrel **12**) in the optical axis O direction through the mutual action of the magnetic field of permanent magnet **28** and a magnetic field by the current flowing through focusing coil **26**.

[0102] Camera-shake correction apparatus **10** will now be described with reference to FIG. **1** and. FIG. **3**.

[0103] Camera-shake correction apparatus **10** has four suspension wires **16** that each have one end fixed to one of the four corners of base printed wiring board (base) **14**, and camera-shake correction coils **18** disposed on the outside of permanent magnet **28** of above auto-focusing lens drive apparatus **20**, facing permanent magnet **28**.

[0104] Four suspension wires **16** extend along optical axis O, and support the entirety of auto-focusing lens drive apparatus **20** so as to be able to rock in first direction (front-back direction) X and second direction (horizontal direction) Y. The other ends of four suspension wires **16** are fixed to upper printed wiring board **36** of above auto-focusing lens drive apparatus **20**. To be precise, upper printed wiring board **36** has four wire fixing holes **36***b* into which the other ends of four suspension wires **16** are inserted. The other ends of four suspension wires **16** are inserted into these four wire fixing holes **36***b*, and are fixed with adhesive, solder, or the like.

[0105] Two of four suspension wires **16** are used to supply power to focusing coil **26**.

[0106] As described above, permanent magnet **28** includes four permanent magnet sections **282** disposed so as to face each other in first direction (front-back direction) X and second direction (horizontal direction) Y.

[0107] Camera-shake correction apparatus **10** is provided with four coil boards **40** disposed so as to face and be spaced from four permanent magnet sections **282** respectively. Above camera-shake correction coils **18** are formed on these four coil boards **40**.

[0108] To be precise, a pair of camera-shake correction coils **18** are formed at either end of each coil board **40**. Therefore, there are a total of eight camera-shake correction coils **18**.

[0109] Four camera-shake correction coils **18** formed on two coil boards **40** disposed so as to face each other in second direction (horizontal direction) Y are for moving (rocking) auto-focusing lens drive apparatus **20** in first direction (front-back direction) X.

[0110] These four camera-shake correction coils **18** are referred to as first-direction actuator **18** (**1**).

[0111] On the other hand, four camera-shake correction coils **18** formed on two coil boards **40** disposed so as to face each other in first direction (front-back direction) X are for moving (rocking) auto-focusing lens drive apparatus **20** in second direction (horizontal direction) Y. These four camera-shake correction coils **18** are referred to as second-direction actuator **18** (**2**).

[0112] In any event, camera-shake correction coils **18** are for driving the entirety of auto-focusing lens drive apparatus **20** in the X-axis direction (first direction) and Y-axis direction second direction) in collaboration with permanent magnet **28**. Also, the combination of camera-shake correction coils **18** and permanent magnet **28** functions as a voice coil motor (VCM).

[0113] Thus, camera-shake correction apparatus **10** illustrated corrects camera shake by moving lens barrel **12** itself, housed in auto-focusing lens drive apparatus **20**, in first direction (front-back direction) X and second direction (horizontal direction) Y. Therefore, camera-shake correction apparatus **10** is referred to as a "barrel-shifting" camera-shake correction apparatus.

[0114] Camera-shake correction apparatus **10** is also provided with shield cover **42** that includes square tubular section **422** covering four coil boards **40**. In the example illustrated, four coil boards **40** are attached to the inner wall of square tubular section **422** of shield cover **42** as shown in FIG. **1**.

[0115] Camera-shake correction apparatus **10** illustrated is also provided with position detection section **50** for detecting the position of auto-focusing lens drive apparatus **20** with respect to base printed wiring board **14**. Position detection section **50** illustrated comprises four Hall devices **50** mounted on base printed wiring board **14**. These four Hall devices **50** are disposed facing and spaced from four permanent magnet sections **282**.

[0116] A pair of Hall devices **50** disposed facing in first direction (front-back direction) X detect a first position associated with first direction (front-back direction) X movement (rocking) by detecting magnetic force of a pair of permanent magnet sections **282** facing them. A pair of Hall devices **50** disposed facing in second direction (horizontal direction) Y detect a second position associated with second direction (horizontal direction) Y movement (rocking) by detecting magnetic force of a pair of permanent magnet sections **282** facing them.

[0117] FIG. **4** is a block diagram showing the configuration of camera-shake correction actuator **600** that controls camera-shake correction apparatus **10**. Camera-shake correction apparatus **10** is installed in a camera-equipped mobile phone (not illustrated).

[0118] The housing of a camera-equipped mobile phone (not illustrated) is provided with first-direction gyroscope **602** for detecting first direction (front-back direction) X shake, and second-direction gyroscope **604** for detecting second direction (horizontal direction) Y shake.

[0119] First-direction gyroscope **602** detects first direction (front-back direction) X angular velocity, and outputs a first angular velocity signal representing the detected first direction (front-back direction) X angular velocity. Second-direction gyroscope **604** detects second direction (horizontal direction) Y angular velocity, and outputs a second angular velocity signal representing the detected second direction (horizontal direction) Y angular velocity. The first and second angular velocity signals are supplied to shake correction control section **606**. A shutter operation command signal is supplied to shake correction control section **606** from shutter button **608**.

[0120] Shake correction control section **606** has shake detection circuit **612** that detects shake of the camera-equipped mobile phone housing from the first and second angular velocity detection signals, and sequence control circuit **614** that receives a shutter operation command signal. Shake detection circuit **612** includes a filter circuit and amplifier circuit. Shake detection circuit **612** supplies a shake detection signal to shake amount detection circuit **616**. Shake amount detection circuit **616** detects a shake amount of the camera-equipped mobile phone housing from the shake detection signal, and sends a shake amount detection signal to coefficient conversion circuit **618**. Coefficient conversion circuit **618** performs coefficient conversion of the shake amount detection signal, and sends a coefficient-converted signal to control circuit **620**. A position detection signal from position detection section (position sensor) **50** provided in camera-shake correction apparatus **10** is supplied to this control circuit **620**.

[0121] In response to the coefficient-converted signal, control circuit **620** outputs a control signal so as to cancel out shake detected by shake detection circuit **612** based on the position detection signals. In response to a shutter operation command signal, sequence control circuit **614** controls the timing of shake amount detection circuit **616**, coefficient conversion circuit **618**, and control circuit **620**. The control signal is supplied to drive circuit **622**.

[0122] As stated earlier, camera-shake correction apparatus **10** is provided with first-direction actuator **18** (**1**) for moving (rocking) the entirety of auto-focusing lens drive apparatus **20** in first direction (front-back direction) X, and second-direction actuator **18** (**2**) for moving (rocking) the entirety of auto-focusing lens drive apparatus **20** in second direction (horizontal direction) Y, as voice coil motors. In any event, camera-shake correction apparatus **10** includes first-direction actuator **18** (**1**) and second-direction actuator **18** (**2**).

[0123] Drive circuit **622** drives first-direction actuator **18** (**1**) and second-direction actuator **18** (**2**) in response to a control signal.

[0124] By means of such a configuration, camera-shake correction apparatus **10** can move (rock) the entirety of auto-focusing lens drive apparatus **20** so as to cancel out shake of a camera-equipped mobile phone housing. As a result, camera shake can be corrected.

[0125] Camera-shake correction apparatus **10** according to a first embodiment of the present invention as described above achieves the following effects.

[0126] Since auto-focusing lens drive apparatus **20** is provided with camera-shake correction apparatus **10**, and permanent magnet **28** is used in common, the number of com-

ponent parts can be reduced. As a result, the size (mainly the height) of camera-shake correction apparatus **10** can be made smaller (lower).

[0127] In an optical unit tilting type of camera-shake correction apparatus, there is a rotation shaft, and consequently friction occurs between a hole and shaft, resulting in the occurrence of hysteresis. In contrast, in camera-shake correction apparatus **10** according to this first embodiment, the entirety of auto-focusing lens drive apparatus **20** is supported mechanically by four suspension wires **16**, making hysteresis unlikely to occur.

[0128] Compared with camera-shake correction apparatuses using conventional optical camera-shake correction methods (lens shifting, sensor shifting, or optical unit tilting), the use of a barrel-shifting method enables the size (mainly the height) of camera-shake correction apparatus **10** to be made virtually the same that of auto-focusing lens drive apparatus **20**. As a result, it is possible for camera-shake correction apparatus **10** according to this first embodiment to be installed in an optical camera-shake correcting camera for mobile phone use.

[0129] In this first embodiment, a magnetic position detection section comprising Hall devices **50** is used as a position detection section (position sensor), but another position detection section (position sensor) such as a photoreflector or suchlike optical position detection section may be used instead of Hall devices **50**.

[0130] Also, in the above-described first embodiment, permanent magnet **28** comprises four permanent magnet sections **282** disposed so as to face each other in first direction X and second direction Y, but the number of permanent magnet sections is not limited to four, and, for example, eight sections may be used that are disposed facing in diagonal directions rather than in only a first and second direction. In this case, the number of camera-shake correction coils **18** and the number of coil boards **40** are also changed in line with the number of permanent magnet sections **288**. Furthermore, in the above-described first embodiment, one end of each of four suspension wires **16** is fixed to one of the four corners of base **14**, but these ends may also be fixed to the outer periphery of base **14**. Moreover, the number of suspension wires **16** is not limited to four, and may be any plurality.

[0131] Camera-shake correction apparatus **10**A according to a second embodiment of the present invention will now be described with reference to FIG. **5** through FIG. **8**. FIG. **5** is an external oblique view of camera-shake correction apparatus **10**A. FIG. **6** is a vertical cross-sectional view of camera-shake correction apparatus **10**A. FIG. **7** is an exploded oblique view of camera-shake correction apparatus **10**A. FIG. **8** is an exploded oblique view of auto-focusing lens drive apparatus **20**A used in camera-shake correction apparatus **10**A shown in FIG. **5**.

[0132] Here, orthogonal coordinate system (X,Y,Z) is used, as shown in FIG. **5** through FIG. **8**. In the states illustrated in FIG. **5** through FIG. **8**, in orthogonal coordinate system (X,Y, Z), the X-axis direction is the front-back direction (depth direction), the Y-axis direction is the horizontal direction (width direction), and the Z-axis direction is the vertical-direction (height direction). In the examples shown in FIG. **5** through FIG. **8**, vertical direction Z is the lens optical axis O direction. In this second embodiment, the X-axis direction (front-back direction) is also referred to as the first direction, and the Y-axis direction (horizontal direction) is also referred to as the second direction.

[0133] In an actual usage situation, the optical axis O direction—that is, the Z-axis direction—is the front-back direction. In other words, the upward Z-axis direction is the forward direction, and the downward Z-axis direction is the rearward direction.

[0134] Camera-shake correction apparatus **10**A illustrated is an apparatus that corrects camera shake (vibration) that occurs when a still image is captured with a small camera for mobile phone use, and enables a blur-free image to be captured. Camera-shake correction apparatus **10**A corrects camera shake by moving the entirety of auto-focusing lens drive apparatus **20**A in first direction (front-back direction) X and second direction (horizontal direction) Y that are perpendicular to optical axis O and are perpendicular to each other.

[0135] Auto-focusing lens drive apparatus **20**A is for moving lens barrel **12**A along optical axis O. Base **14**A is disposed so as to be spaced from the bottom surface of auto-focusing lens drive apparatus **20**A. Although not illustrated, an imaging device disposed on an imaging board is mounted on the bottom (rear part) of this base **14**A. This imaging device captures a subject image formed by means of lens barrel **12**A, and converts this subject image to an electrical signal. The imaging device comprises, for example, a CCD (charge coupled device) image sensor, CMOS (complementary metal oxide semiconductor) image sensor, or the like. Therefore, a camera module is configured by combining lens drive apparatus **20**A, an imaging board, and an imaging device.

[0136] Base **14**A comprises ring-shaped base section **142**A of square external shape and having a circular aperture inside, and square-tube-shaped tubular section **144**A that projects in the upward optical axis O direction from the outer edge of this base section **142**A.

[0137] Camera-shake correction apparatus **10**A has four suspension wires **16**A that each have one end fixed to one of the four corners of base section **142**A of base **14**A, and camera-shake correction coils **18**A disposed so as to face permanent magnet **28**A of auto-focusing lens drive apparatus **20**A described later herein in a manner described later herein.

[0138] Four suspension wires **16**A extend along optical axis O, and support the entirety of auto-focusing lens drive apparatus **20**A so as to be able to rock in first direction (front-back direction) X and second direction (horizontal direction) Y. The other ends of four suspension wires **16**A are fixed to the upper end of above auto-focusing lens drive apparatus **20**A as described later herein.

[0139] As described later herein, camera-shake correction apparatus **10**A is provided with one square-ring-shaped coil board **40**A disposed so as to face and be spaced from permanent magnet **28**A. This coil board **40**A is attached to the upper end of tubular section **144**A of base **14**A. Above camera-shake correction coils **18**A are formed on this coil board **40**A.

[0140] Auto-focusing lens drive apparatus **20**A will now be described with reference to FIG. **8**.

[0141] Auto-focusing lens drive apparatus **20**A is provided with lens holder **24**A having tubular section **240**A for holding lens barrel **12**A, first and second focusing coils **26**A-**1** and **26**A-**2** fixed to this lens holder **24**A so as to be positioned around tubular section **240**A, magnet holder **30**A that holds permanent magnet **28**A disposed on the outside of first and second focusing coils **26**A-**1** and **26**A-**2**, facing first and second focusing coils **26**A-**1** and **26**A-**2**, and a pair of leaf springs **32**A and **34**A provided on either side of optical axis O of tubular section **240**A of lens holder **24**A.

[0142] First focusing coil **26**A-**1** is installed in the upper optical axis O direction of tubular section **240**A of lens holder **24**A, and second focusing coil **26**A-**2** is installed in the lower optical axis O direction of tubular section **240**A of lens holder **24**A.

[0143] The pair of leaf springs **32**A and **34**A support lens holder **24**A so as to be displaceable in the optical axis O direction when lens holder **24**A is positioned in a radial direction. Of the pair of leaf springs **32**A and **34**A, leaf spring **32**A is referred to as the upper leaf spring, and leaf spring **34**A is referred to as the lower leaf spring.

[0144] As stated above, in an actual usage situation, the upward Z-axis direction (optical axis O direction) is the forward direction, and the downward Z-axis direction (optical axis O direction) is the rearward direction. Therefore, upper leaf spring **32**A is also referred to as the front spring, and lower leaf spring **34**A is also referred to as the rear spring.

[0145] Magnet holder **30**A is of octagonally tubular shape. That is to say, magnet holder **30**A has octagonally tubular outer tube section **302**A, square upper ring-shaped end section **304**A provided on the top (front) of this outer tube section **302**A, and octagonal lower ring-shaped end **306**A provided on the bottom (rear) of outer tube section **302**A.

[0146] First and second focusing coils **26**A-**1** and **26**A-**2** are each of octagonally tubular shape matching the shape of octagonally tubular magnet holder **30**A. Permanent magnet **28**A comprises eight rectangular permanent magnet sections disposed on octagonally tubular outer tube section **302**A of magnet holder **30***a* so as to be spaced from each other in first direction (front-back direction) X, second direction (horizontal direction) Y, and vertical direction Z. Of these eight rectangular permanent magnet sections, four first permanent magnet sections **282**A-**1** are disposed in the upper optical axis O direction of outer tube section **302**A, and remaining four second permanent magnet sections **282**A-**2** are disposed in the lower optical axis O direction of outer tube section **302**A. Four first permanent magnet sections **282**A-**1** are disposed spaced from first focusing coil **26**A-**1**, and four second permanent magnet sections **282**A-**2** are disposed spaced from second focusing coil **26**A-**2**.

[0147] Upper leaf spring (front spring) **32**A is disposed above (forward) in the optical axis O direction in lens holder **24**A, and lower leaf spring (rear spring) **34**A is disposed below (rearward) in the optical axis O direction in lens holder **24**A. Upper leaf spring (front spring) **32**A and lower leaf spring (rear spring) **34**A have almost identical configurations.

[0148] Upper leaf spring (front spring) **32**A has upper inner ring section **322**A attached to the top of lens holder **24**A, and upper outer ring section **324**A attached to upper ring-shaped end section **304**A of magnet holder **30**A. Four upper arm sections **326**A are provided between upper inner ring section **322**A and upper outer ring section **324**A. That is to say, four upper arm sections **326**A link upper inner ring section **322**A and upper outer ring section **324**A.

[0149] Upper outer ring section **324**A has four wire fixing holes **324**Aa into which the other ends of above four suspension wires **16**A are inserted.

[0150] Similarly, lower leaf spring (rear spring) **34**A has lower inner ring section **342**A attached to the bottom of lens holder **24**A, and lower outer ring section **344**A attached to lower ring-shaped end **306**A of magnet holder **30**A. Four lower arm sections **346**A are provided between lower inner ring section **342**A and upper outer ring section **344**A. That is to say, four lower arm sections **346**A link lower inner ring section **342**A and lower outer ring section **344**A.

[0151] The elastic members comprising upper leaf spring **32**A and lower leaf spring **34**A function as guide sections that guide lens holder **24**A so as to be able to move only in the optical axis O direction. Upper leaf spring **32**A and lower leaf spring **34**A are made of beryllium copper, phosphor bronze, or the like.

[0152] An internal thread (not illustrated) is cut into the inner peripheral wall of tubular section **240**A of lens holder **24**A, and an external thread (not illustrated) that is screwed into the above internal thread is cut into the outer peripheral wall of lens barrel **12**A. Therefore, to fit lens barrel **12**A into lens holder **24**A, lens barrel **12**A is accommodated inside lens holder **24**A by turning lens barrel **12**A about optical axis O and screwing lens barrel **12**A into tubular section **240**A of lens holder **24**A in the optical axis O direction, and they are joined together by means of adhesive or the like.

[0153] By passing first and second auto-focusing (AF) currents through first and second focusing coils **26**A-**1** and **26**A-**2** respectively as described later herein, it is possible to adjust the position of lens holder **24**A (lens barrel **12**A) in the optical axis O direction through the mutual action of the magnetic field of permanent magnet **28**A and magnetic fields by the AF currents flowing through first and second focusing coils **26**A-**1** and **26**A-**2**.

[0154] Camera-shake correction apparatus **10**A will now be described in further detail with reference to FIG. **6** and FIG. **7**.

[0155] As stated earlier, camera-shake correction apparatus **10**A has four suspension wires **16**A that each have one end fixed to one of the four corners of base section **142**A of base **14**A, and camera-shake correction coils **18**A disposed on the outside of permanent magnet **28**A of above auto-focusing lens drive apparatus **20**A, facing permanent magnet **28**A.

[0156] Four suspension wires **16**A extend along optical axis O, and support the entirety of auto-focusing lens drive apparatus **20**A so as to be able to rock in first direction (front-back direction) X and second direction (horizontal direction) Y. The other ends of four suspension wires **16**A are fixed to the top of above auto-focusing lens drive apparatus **20**A.

[0157] To be precise, as stated earlier, upper outer ring section **324**A has four wire fixing holes **324**Aa into which the other ends of four suspension wires **16**A are inserted (see FIG. **8**). Also, upper ring-shaped end section **304**A of magnet holder **30**A has four wire insertion holes **304**Aa into which the other ends of four suspension wires **16**A are inserted (see FIG. **8**). The other ends of four suspension wires **16**A are inserted into four wire fixing holes **324**Aa via these four wire insertion holes **304**Aa, and are fixed with adhesive, solder, or the like.

[0158] Four suspension wires **16**A are used to supply current to first and second focusing coils **26**A-**1** and **26**A-**2**.

[0159] As described above, permanent magnet **28**A comprises four first permanent magnet sections **282**A-**1** and four second permanent magnet sections **282**A-**2** disposed so as to face each other in first direction (front-back direction) X and second direction (horizontal direction) Y, and to be spaced vertically in the optical axis O direction.

[0160] Camera-shake correction apparatus **10**A is provided with one square-ring-shaped coil board **40**A disposed so as to be inserted between and spaced from four first permanent magnet sections **282**A-**1** and four second permanent magnet

sections **282**A-**2**. Coil board **40**A has through-holes **40**Aa at its four corners for the passage of four suspension wires **16**A. Above camera-shake correction coils **18**A are formed on this one coil board **40**A.

[0161] To be precise, four camera-shake correction coils **18**Af, **18**Ab, **18**A**1**, and **18**Ar are formed on coil board **40**A as camera-shake correction coils **18**A (see FIG. **9**).

[0162] Two camera-shake correction coils **18**Af and **18**Ab disposed so as to face each other in first direction (front-back direction) X are for moving (rocking) auto-focusing lens drive apparatus **20**A in first direction (front-back direction) X. These two camera-shake correction coils **18**Af and **18**Ab are referred to as the first-direction actuator. Here, camera-shake correction coil **18**Af located forward with respect to optical axis O is referred to as the "front camera-shake correction coil," and camera-shake correction coil **18**Ab located rearward with respect to optical axis O is referred to as the "back camera-shake correction coil."

[0163] On the other hand, two camera-shake correction coils **18**A**1** and **18**Ar disposed so as to face each other in second direction (horizontal direction) Y are for moving (rocking) auto-focusing lens drive apparatus **20**A in second direction (horizontal direction) Y. These two camera-shake correction coils **18**A**1** and **18**Ar are referred to as the second-direction actuator. Here, camera-shake correction coil **18**A**1** located leftward with respect to optical axis O is referred to as the "left camera-shake correction coil," and camera-shake correction coil **18**Ar located rightward with respect to optical axis O is referred to as the "right camera-shake correction coil."

[0164] In any event, four camera-shake correction coils **18**Af, **18**Ab, **18**A**1**, and **18**Ar are for driving the entirety of auto-focusing lens drive apparatus **20**A in the X-axis direction (first direction) and Y-axis direction second direction) in collaboration with permanent magnet **28**A. Also, the combination of four camera-shake correction coils **18**Af, **18**Ab, **18**A**1**, and **18**Ar and permanent magnet **28**A functions as a voice coil motor (VCM).

[0165] Thus, camera-shake correction apparatus **10**A illustrated corrects camera shake by moving lens barrel **12**A itself, housed in auto-focusing lens drive apparatus **20**A, in first direction (front-back direction) X and second direction (horizontal direction) Y. Therefore, camera-shake correction apparatus **10**A is referred to as a "barrel-shifting" camera-shake correction apparatus.

[0166] Camera-shake correction apparatus **10**A is also provided with cover **42**A that includes square tubular section **422**A covering the upper part (four first permanent magnet sections **282**A-**1**) of auto-focusing lens drive apparatus **20**A.

[0167] Camera-shake correction apparatus **10**A illustrated is also provided with position detection section **50**A for detecting the position of auto-focusing lens drive apparatus **20**A with respect to base **14**A. Position detection section **50**A illustrated comprises a magnetic position detection section composed of two Hall devices **50**A mounted on base section **142**A of base **14**A. These two Hall devices **50**A are disposed facing and spaced from two of four second permanent magnet sections **282**A-**2**. As shown in FIG. **10**, Hall devices **50**A are disposed so as to intersect the direction from the N pole to the S pole in second permanent magnet sections **282**A-**2**.

[0168] One Hall device **50**A disposed in first direction (front-back direction) X with respect to optical axis O detects a first position associated with first direction (front-back direction) X movement (rocking) by detecting magnetic force of one second permanent magnet section **282**A-**2** facing it. One Hall device **50**A disposed in second direction (horizontal direction) Y with respect to optical axis O detects a second position associated with second direction (horizontal direction) Y movement (rocking) by detecting magnetic force of one second permanent magnet section **282**A-**2** facing it.

[0169] In camera-shake correction apparatus **10**A according to the second embodiment, a magnetic position detection section comprising two Hall devices **50**A is used as position detection section **50**A, but a magnetic position detection section comprising four Hall devices **50** may also be used, as in camera-shake correction apparatus **10** according to the first embodiment described earlier.

[0170] A magnetic circuit used in camera-shake correction apparatus **10**A shown in FIG. **6** and FIG. **7** will now be described in detail with reference to FIG. **9** through FIG. **11**. FIG. **9** is an oblique view of the magnetic circuit, and FIG. **10** is a vertical cross-sectional view of the magnetic circuit. FIG. **11** is a plan view with four first permanent magnet sections **282**A-**2** and first focusing coil **26**A-**1** omitted from the magnetic circuit.

[0171] Four first permanent magnet sections **282**A-**1** and four second permanent magnet sections **282**A-**2** have different adjacent pole magnetization in outward and inward radial directions of lens holder **24**A. For example, as shown in FIG. **10**, first permanent magnet sections **282**A-**1** have inward S pole magnetization and outward N pole magnetization, while four second permanent magnet sections **282**A-**2** have outward S pole magnetization and inward N pole magnetization. The arrows in FIG. **10** indicate the directions of magnetic flux generated by these permanent magnet sections **282**A-**1** and **282**A-**2**.

[0172] Operation when the position of lens holder **24**A (lens barrel **12**A) is adjusted in the optical axis O direction will now be described with reference to FIG. **9**.

[0173] A first AF current and second AF current flow in different directions from each other in first focusing coil **26**A-**1** and second focusing coil **26**A-**2** respectively. For example, as shown in FIG. **9**, in first focusing coil **26**A-**1**, a first AF current flows in a clockwise direction as indicated by arrow I.sub.AF**1**, and in second focusing coil **26**A-**2**, a second AF current flows in a counterclockwise direction as indicated by arrow I.sub.AF**2**.

[0174] As shown in FIG. **9**, in this case, according to Fleming's left hand rule, an upward magnetic force acts on first focusing coil **26**A-**1** as indicated by arrow F.sub.AF**1**, and an upward magnetic force also acts on second focusing coil **26**A-**2** as indicated by arrow F.sub.AF**2**. As a result, lens holder **24**A (lens barrel **12**A) can be moved in the upward optical axis O direction.

[0175] Conversely, by passing a first AF current through first focusing coil **26**A-**1** in a counterclockwise direction, and passing a second AF current through second focusing coil **26**A-**2** in a clockwise direction, lens holder **24**A (lens barrel **12**A) can be moved in the downward optical axis O direction.

[0176] Operation when the entirety of auto-focusing lens drive apparatus **20**A is moved in first direction (front-back direction) X or second direction (horizontal direction) Y will now be described with reference to FIG. **11**.

[0177] First, operation when the entirety of auto-focusing lens drive apparatus **20**A is moved in second direction (horizontal direction) Y will be described. In this case, as shown in FIG. **11**, in left camera-shake correction coil **18**A**1** a first camera-shake correction (IS) current flows in a clockwise

direction as indicated by arrow I.sub.IS1, and in right camera-shake correction coil **18**Ar a second camera-shake correction (IS) current flows in a counterclockwise direction as indicated by arrow I.sub.IS2.

[0178] In this case, according to Fleming's left hand rule, a left-direction magnetic force acts on left camera-shake correction coil **18**A1, and a left-direction magnetic force also acts on right camera-shake correction coil **18**Ar. However, since these camera-shake correction coils **18**A1 and **18**Ar are fixed to base **14**A, as a reaction thereto, right-direction magnetic forces as indicated by arrows F.sub.IS1 and F.sub.IS2 in FIG. **11** act on the entirety of auto-focusing lens drive apparatus **20**A. As a result, the entirety of auto-focusing lens drive apparatus **20**A can be moved in a rightward direction.

[0179] Conversely, by passing a first IS current through left camera-shake correction coil **18**A1 in a counterclockwise direction, and passing a second IS current through right camera-shake correction coil **18**Ar in a clockwise direction, the entirety of auto-focusing lens drive apparatus **20**A can be moved in a leftward direction.

[0180] On the other hand, by passing a third IS current through back camera-shake correction coil **18**Ab in a clockwise direction, and passing a fourth IS current through front camera-shake correction coil **18**Af in a counterclockwise direction, the entirety of auto-focusing lens drive apparatus **20**A can be moved in a forward direction.

[0181] Also, by passing a third IS current through back camera-shake correction coil **18**Ab in a counterclockwise direction, and passing a fourth IS current through front camera-shake correction coil **18**Af in a clockwise direction, the entirety of auto-focusing lens drive apparatus **20**A can be moved in a rearward direction.

[0182] In this way, camera shake can be corrected.

[0183] Camera-shake correction apparatus **10**A according to a second embodiment of the present invention as described above achieves the following effects.

[0184] Since auto-focusing lens drive apparatus **20**A is provided with camera-shake correction apparatus **10**A, and permanent magnet **28**A is used in common, the number of component parts can be reduced. As a result, the size (mainly the height) of camera-shake correction apparatus **10**A can be made smaller (lower).

[0185] In an optical unit tilting type of camera-shake correction apparatus, there is a rotation shaft, and consequently friction occurs between a hole and shaft, resulting in the occurrence of hysteresis. In contrast, in camera-shake correction apparatus **10**A according to this second embodiment, the entirety of auto-focusing lens drive apparatus **20**A is supported mechanically by four suspension wires **16**A, making hysteresis unlikely to occur.

[0186] Compared with camera-shake correction apparatuses using conventional optical camera-shake correction methods (lens shifting, sensor shifting, or optical unit tilting), the use of a barrel-shifting method enables the size (mainly the height) of camera-shake correction apparatus **10**A to be made virtually the same that of auto-focusing lens drive apparatus **20**A. As a result, it is possible for camera-shake correction apparatus **10**A according to this second embodiment to be installed in an optical camera-shake correcting camera for mobile phone use.

[0187] Also, since camera-shake correction coils **18**A are disposed between upper four first permanent magnet sections **282**A-**1** and lower four second permanent magnet sections **282**A-**2**, it is possible to implement highly sensitive actuators.

[0188] In this second embodiment, a magnetic position detection section comprising two Hall devices **50**A is used as a position detection section (position sensor), but another position detection section (position sensor) such as a photo-reflector or suchlike optical position detection section may be used instead of Hall devices **50**A.

[0189] In the above-described second embodiment, permanent magnet **28**A comprises four first permanent magnet sections **282**A-**1** and four second permanent magnet sections **282**A-**2** disposed so as to face each other in first direction X and second direction Y, and to be spaced vertically in the optical axis O direction, but the number of first permanent magnet sections and second permanent magnet sections is not limited to four each, and, for example, eight sections may be used that are disposed facing in diagonal directions rather than in only a first and second direction. In this case, the number of camera-shake correction coils **18**A is also changed to eight. Also, in the above-described second embodiment, four suspension wires **16**A rise up from the four corners of base section **142**A of base **14**A, but these ends may also rise up from the outer periphery of base section **142**A. Furthermore, the number of suspension wires **16**A is not limited to four, and may be any plurality.

[0190] Camera-shake correction apparatuses **10** and **10**A according to the first and second embodiments described above use a "moving magnet method" in which permanent magnets **18** and **18**A are moved. However, a "moving coil method" in which a coil is moved may also be used. By this means, moving parts of an auto-focusing lens drive apparatus can be made lighter.

[0191] Camera-shake correction apparatus **10**B according to a third embodiment of the present invention will now be described with reference to FIG. **12** through FIG. **15**. FIG. **12** is an external oblique view of camera-shake correction apparatus **10**B. FIG. **13** is a vertical cross-sectional view of camera-shake correction apparatus **10**B. FIG. **14** is an exploded oblique view of camera-shake correction apparatus **10**B. FIG. **15** is an exploded oblique view of auto-focusing lens drive apparatus **20**B used in camera-shake correction apparatus **10**B shown in FIG. **12**.

[0192] Here, orthogonal coordinate system (X,Y,Z) is used, as shown in FIG. **12** through FIG. **15**. In the states illustrated in FIG. **12** through FIG. **15**, in orthogonal coordinate system (X,Y,Z), the X-axis direction is the front-back direction (depth direction), the Y-axis direction is the horizontal direction (width direction), and the Z-axis direction is the vertical-direction (height direction). In the examples shown in FIG. **12** through FIG. **15**, vertical direction Z is the lens optical axis O direction. In this third embodiment, the X-axis direction (front-back direction) is also referred to as the first direction, and the Y-axis direction (horizontal direction) is also referred to as the second direction.

[0193] In an actual usage situation, the optical axis O direction—that is, the Z-axis direction—is the front-back direction. In other words, the upward Z-axis direction is the forward direction, and the downward Z-axis direction is the rearward direction.

[0194] Camera-shake correction apparatus **10**B illustrated is an apparatus that corrects camera shake (vibration) that occurs when a still image is captured with a small camera for mobile phone use, and enables a blur-free image to be captured. Camera-shake correction apparatus **10**B corrects camera shake by moving a moving part of auto-focusing lens drive apparatus **20**B in first direction (front-back direction) X

and second direction (horizontal direction) Y that are perpendicular to optical axis O and are perpendicular to each other. Camera-shake correction apparatus **10**B illustrated is a camera-shake correction apparatus that uses a "moving coil method."

[0195] Auto-focusing lens drive apparatus **20**B is for moving a lens barrel (not illustrated) along optical axis O. Base **14**B is disposed so as to be spaced from the bottom surface of auto-focusing lens drive apparatus **20**B in an outward radial direction. Although not illustrated, an imaging device disposed on an imaging board is mounted on the bottom (rear part) of this base **14**B. This imaging device captures a subject image formed by means of the lens barrel, and converts this subject image to an electrical signal. The imaging device comprises, for example, a CCD (charge coupled device) image sensor, CMOS (complementary metal oxide semiconductor) image sensor, or the like. Therefore, a camera module is configured by combining lens drive apparatus **20**B, an imaging board, and an imaging device.

[0196] Base **14**B comprises ring-shaped base section **142**B of square external shape and having a circular aperture inside, and square-tube-shaped tubular section **144**B having four rectangular apertures **144**Ba that projects in the upward optical axis O direction from the outer edge of this base section **142**B.

[0197] Camera-shake correction apparatus **10**B has eight suspension wires **16**B, pairs of which each have one end fixed to one of the four corners of base section **142**B of base **14**B, and camera-shake correction coils **18**B disposed so as to face permanent magnet **28**B of auto-focusing lens drive apparatus **20**B described later herein in a manner described later herein.

[0198] Eight suspension wires **16**B extend along optical axis O, and support a moving part of auto-focusing lens drive apparatus **20**B so as to be able to rock in first direction (front-back direction) X and second direction (horizontal direction) Y. The other ends of eight suspension wires **16**B are fixed to the upper end of above auto-focusing lens drive apparatus **20**B as described later herein.

[0199] As described later herein, camera-shake correction apparatus **10**B is provided with one square-ring-shaped coil board **40**B disposed so as to face and be spaced from permanent magnet **28**B. This coil board **40**B is attached to coil holder **44**B. Above camera-shake correction coils **18**B are formed on this coil board **40**B.

[0200] Coil holder **44**B has four pillar sections **442**B extending in parallel to the optical axis O direction at its four corners, approximately square upper ring-shaped end **444**B attached to the upper ends (front ends) of these four pillar sections **442**B, and lower ring-shaped end **446**B attached to the lower ends (rear ends) of four pillar sections **442**B. Upper ring-shaped end **444**B has four upper projections **444**Ba projecting upward at its four corners, and lower ring-shaped end **446**B also has four lower projections **446**Ba projecting upward.

[0201] Auto-focusing lens drive apparatus **208** will now be described with reference to FIG. **14** and FIG. **15**.

[0202] Auto-focusing lens drive apparatus **20**B is provided with lens holder **24**B having tubular section **240**B for holding a lens barrel, first and second focusing coils **26**B-**1** and **26**B-**2** fixed to this lens holder **24**B so as to be positioned around tubular section **240**B, four magnet holders **30**B that hold permanent magnet **28**B disposed on the outside of first and second focusing coils **26**B-**1** and **26**B-**2**, facing first and second focusing coils **26**B-**1** and **26**B-**2**, and a pair of leaf springs **32**B and **34**B provided on either side of optical axis O of tubular section **240**B of lens holder **24**B.

[0203] First focusing coil **26**B-**1** is installed in the upper optical axis O direction of tubular section **240**B of lens holder **24**B, and second focusing coil **26**B-**2** is installed in the lower optical axis O direction of tubular section **240**B of lens holder **24**B.

[0204] The pair of leaf springs **32**B and **34**B support lens holder **24**B so as to be displaceable in the optical axis O direction when lens holder **24**B is positioned in a radial direction. Of the pair of leaf springs **32**B and **34**B, leaf spring **32**B is referred to as the upper leaf spring, and leaf spring **34**B is referred to as the lower leaf spring.

[0205] As stated above, in an actual usage situation, the upward Z-axis direction (optical axis O direction) is the forward direction, and the downward Z-axis direction (optical axis O direction) is the rearward direction. Therefore, upper leaf spring **32**B is also referred to as the front spring, and lower leaf spring **34**B is also referred to as the rear spring.

[0206] Four magnet holders **30**B are inserted into and fixed in four rectangular apertures **144**Ba of tubular section **144**B of base **14**B. Permanent magnet **28**B comprises eight rectangular permanent magnet sections disposed in pairs on four magnet holders **30**B so as to be spaced from each other in first direction (front-back direction) X, second direction (horizontal direction) Y, and vertical direction Z. Of these eight rectangular permanent magnet sections, four first permanent magnet sections **282**B-**1** are disposed in the upper optical axis O direction of four magnet holders **30**B, and remaining four second permanent magnet sections **282**B-**2** are disposed in the lower optical axis O direction of four magnet holders **30**B. Four first permanent magnet sections **282**B-**1** are disposed spaced from first focusing coil **26**B-**1**, and four second permanent magnet sections **282**B-**2** are disposed spaced from second focusing coil **26**B-**2**.

[0207] Upper leaf spring (front spring) **32**B is disposed above (forward) in the optical axis O direction in lens holder **24**B, and lower leaf spring (rear spring) **34**B is disposed below (rearward) in the optical axis O direction in lens holder **24**B. Upper leaf spring (front spring) **32**B and lower leaf spring (rear spring) **34**B have almost identical configurations.

[0208] Upper leaf spring (front spring) **32**B has upper inner ring section **322**A attached to the top of lens holder **24**B, and upper outer ring section **324**B attached to upper ring-shaped end **444**B of coil holder **44**B. Four upper arm sections **326**B are provided between upper inner ring section **322**B and upper outer ring section **324**B. That is to say, four upper arm sections **326**B link upper inner ring section **322**B and upper outer ring section **324**B.

[0209] Upper outer ring section **324**B has four upper holes **324**Ba into which four upper projections **444**Ba of coil holder **44**B are pressed (inserted and attached). That is to say, four upper projections **444**Ba of coil holder **44**B are pressed into (inserted into and attached inside) four upper holes **324**Ba of upper outer ring section **324**B of upper leaf spring **32**B. On the other hand, tubular section **240**B of lens holder **24**B has four upper projections **240**Ba on its upper end. Upper inner ring section **322**B has four upper holes **322**Ba into which these four upper projections **240**Ba of tubular section **240**B are pressed (inserted and attached). That is to say, four upper projections **240**Ba of tubular section **240**B of lens holder **24**B are pressed into (inserted into and attached inside) four upper holes **322**Ba of upper inner ring section **322**B of upper leaf spring **32**B.

[0210] Similarly, lower leaf spring (rear spring) **34**B has lower inner ring section **342**B attached to the bottom of lens holder **24**B, and lower outer ring section **344**B attached to lower ring-shaped end **446**B of coil holder **44**B. Four lower arm sections **346**B are provided between lower inner ring section **342**B and upper outer ring section **344**B. That is to say, four lower arm sections **346**B link lower inner ring section **342**B and lower outer ring section **344**B.

[0211] Lower outer ring section **344**B has four lower holes **344**Ba into which four lower projections **446**Ba of coil holder **44**B are pressed (inserted and attached). That is to say, four lower projections **446**Ba of coil holder **44**B are pressed into (inserted into and attached inside) four lower holes **344**Ba of lower outer ring section **344**B of lower leaf spring **34**B.

[0212] The elastic members comprising upper leaf spring **32**B and lower leaf spring **34**B function as guide sections that guide lens holder **24**B so as to be able to move only in the optical axis O direction. Upper leaf spring **32**B and lower leaf spring **34**B are made of beryllium copper, phosphor bronze, or the like.

[0213] An internal thread (not illustrated) is cut into the inner peripheral wall of tubular section **240**B of lens holder **24**B, and an external thread (not illustrated) that is screwed into the above internal thread is cut into the outer peripheral wall of the lens barrel. Therefore, to fit the lens barrel into lens holder **24**B, the lens barrel is accommodated inside lens holder **24**B by turning the lens barrel about optical axis O and screwing the lens barrel into tubular section **240**B of lens holder **24**B in the optical axis O direction, and they are joined together by means of adhesive or the like.

[0214] By passing first and second auto-focusing (AF) currents through first and second focusing coils **26**B-**1** and **26**B-**2** respectively, it is possible to adjust the position of lens holder **24**B (the lens barrel) in the optical axis O direction through the mutual action of the magnetic field of permanent magnet **28**B and magnetic fields by the first and second AF currents flowing through first and second focusing coils **26**B-**1** and **26**B-**2**.

[0215] Camera-shake correction apparatus **10**B will now be described in further detail with reference to FIG. **13** and FIG. **14**.

[0216] As stated earlier, camera-shake correction apparatus **10**B has eight suspension wires **16**B, pairs of which each have one end fixed to one of the four corners of base section **142**B of base **14**B, and camera-shake correction coils **188** disposed so as to face permanent magnet **28**B of above-described auto-focusing lens drive apparatus **20**B.

[0217] Consequently, base section **142**B has eight wire fixing holes **142**Ba, disposed in pairs in its four corners, into each of which one end of one of eight suspension wires **16**B is inserted.

[0218] Eight suspension wires **16**B extend along optical axis O, and support a moving part of auto-focusing lens drive apparatus **20**B so as to be able to rock in first direction (front-back direction) X and second direction (horizontal direction) Y. The other ends of eight suspension wires **16**B are fixed to the top of above auto-focusing lens drive apparatus **20**B.

[0219] To be precise, coil holder **44**B further has four projecting sections **448**B projecting in an outward radial direction at the four corners of upper ring-shaped end **444**B (see FIG. **15**). Each of four projecting sections **448**B has two wire fixing holes **448**Ba into which the other ends of two suspension wires **16**B are inserted. Therefore, the other ends of eight suspension wires **16**B are inserted into these eight wire fixing holes **448**Ba, and are fixed with adhesive, solder, or the like.

[0220] The reason why the number of suspension wires **16**B is eight in this third embodiment is that current is supplied to first and second focusing coils **268**-**1** and **26**B-**2**, and camera-shake correction coils **18**B, via these eight suspension wires **16**B.

[0221] As stated above, permanent magnet **28**B comprises four first permanent magnet sections **282**B-**1** and four second permanent magnet sections **282**B-**2** disposed so as to face each other in first direction (front-back direction) X and second direction (horizontal direction) Y, and so as to be spaced vertically in the optical axis O direction.

[0222] Camera-shake correction apparatus **10**B is provided with one ring-shaped coil board **40**B disposed so as to be inserted between and spaced from four first permanent magnet sections **282**B-**1** and four second permanent magnet sections **282**B-**2**. Above camera-shake correction coils **18**B are formed on this one coil board **40**B.

[0223] To be precise, four camera-shake correction coils **18**B are formed on coil board **40**B.

[0224] Two camera-shake correction coils **18**B disposed so as to face each other in first direction (front-back direction) X are for moving (rocking) a moving part of auto-focusing lens drive apparatus **20**B in first direction (front-back direction) X. These two camera-shake correction coils **18**B are referred to as the first-direction actuator.

[0225] On the other hand, two camera-shake correction coils **18**B disposed so as to face each other in second direction (horizontal direction) Y are for moving (rocking) a moving part of auto-focusing lens drive apparatus **20**B in second direction (horizontal direction) Y. These two camera-shake correction coils **18**B are referred to as the second-direction actuator.

[0226] In any event, camera-shake correction coils **18**B are for driving a moving part of auto-focusing lens drive apparatus **20**B in the X-axis direction (first direction) and Y-axis direction second direction) in collaboration with permanent magnet **28**B. Also, the combination of camera-shake correction coils **18**B and permanent magnet **28**B functions as a voice coil motor (VCM).

[0227] Thus, camera-shake correction apparatus **10**B illustrated corrects camera shake by moving the lens barrel itself, housed in auto-focusing lens drive apparatus **20**B, in first direction (front-back direction) X and second direction (horizontal direction) Y. Therefore, camera-shake correction apparatus **10**B is referred to as a "barrel-shifting" camera-shake correction apparatus.

[0228] Camera-shake correction apparatus **10**B is also provided with cover **42** covering the upper part of auto-focusing lens drive apparatus **20**B.

[0229] Also, referring to FIG. **16** in addition to FIG. **13** and FIG. **14**, camera-shake correction apparatus **10**B is also provided with position detection section (**50**B, **51**B) for detecting the position of a moving part of auto-focusing lens drive apparatus **20**B with respect to base **14**B.

[0230] To be precise, position detection section (**50**B, **51**B) illustrated comprises an optical position detection section. Position detection section (**50**B, **51**B) comprises two position detectors, each of which comprises photoreflector **50**B and position information section **51**B disposed facing each other. Two position information sections **51**B are disposed in first direction X and second direction Y on the underside of lower

ring-shaped end **446**B of coil holder **44**B (in FIG. **13**, only one position information section disposed in second direction Y is illustrated).

[0231] As shown in FIG. **16**, each position information section **51**B comprises reflective tape (a reflective seal), and is affixed to the underside of lower ring-shaped end **446**B. Reflective tape **51**B has a pattern in which a reference position is made a boundary in first direction X or second direction Y, and black and white/light and dark are clearly distinguishable.

[0232] On the other hand, two photoreflectors **50**B are mounted on base section **142**B of base **14**B as shown in FIG. **14**. Two photoreflectors **50**B are disposed spaced from and facing two position information sections **51**B.

[0233] One photoreflector **50**B disposed in first direction (front-back direction) X with respect to optical axis O detects a first position associated with first direction (front-back direction) X movement (rocking) as a voltage level by receiving reflected light from one position information section **51**B (detecting the light intensity of the reflected light) by intersecting the light and dark of that position information section **51**B facing that photoreflector **50**B, as shown by the arrow in FIG. **16**. One photoreflector **50**B disposed in second direction (horizontal direction) Y with respect to optical axis O detects a second position associated with second direction (horizontal direction) Y movement (rocking) as a voltage level by receiving reflected light from one position information section **51**B (detecting the light intensity of the reflected light) by intersecting the light and dark of that position information section **51**B facing that photoreflector **50**B, as shown by the arrow in FIG. **16**.

[0234] In camera-shake correction apparatus **10**B according to the third embodiment, an optical position detection section that includes two photoreflectors **50**B is used as position detection section **50**B, but an optical position detection section that includes four photoreflectors may also be used. Also, the position information section **51**B pattern is not limited to a black-and-white light-and-dark (binary) pattern, and various kinds of patterns may be used, such as a continuous pattern using gradations, or a continuous pattern using area ratio variation.

[0235] In camera-shake correction apparatus **10**B having this kind of configuration, operation when the position of lens holder **24**B (the lens barrel) is adjusted in the optical axis O direction is similar to that of camera-shake correction apparatus **10**A according to the second embodiment described with reference to FIG. **9**, and therefore a description thereof is omitted here. Also, operation when a moving part of auto-focusing lens drive apparatus **20**B is moved in first direction (front-back direction) X or second direction (horizontal direction) Y is similar to that of camera-shake correction apparatus **10**A according to the second embodiment described with reference to FIG. **11**, and therefore a description thereof is omitted here.

[0236] Camera-shake correction apparatus **10**B according to a third embodiment of the present invention as described above achieves the following effects.

[0237] Since auto-focusing lens drive apparatus **20**B is provided with camera-shake correction apparatus **10**B, and permanent magnet **28**B is used in common, the number of component parts can be reduced. As a result, the size (mainly the height) of camera-shake correction apparatus **10**B can be made smaller (lower).

[0238] In an optical unit tilting type of camera-shake correction apparatus, there is a rotation shaft, and consequently friction occurs between a hole and shaft, resulting in the occurrence of hysteresis. In contrast, in camera-shake correction apparatus **10**B according to this third embodiment, a moving part of auto-focusing lens drive apparatus **20**B is supported mechanically by eight suspension wires **16**B, making hysteresis unlikely to occur.

[0239] Compared with camera-shake correction apparatuses using conventional optical camera-shake correction methods (lens shifting, sensor shifting, or optical unit tilting), the use of a barrel-shifting method enables the size (mainly the height) of camera-shake correction apparatus **10**B to be made virtually the same that of auto-focusing lens drive apparatus **20**B. As a result, it is possible for camera-shake correction apparatus **10**B according to this third embodiment to be installed in an optical camera-shake correcting camera for mobile phone use.

[0240] Also, since camera-shake correction coils **18**B are disposed between upper four first permanent magnet sections **282**B-**1** and lower four second permanent magnet sections **282**B-**2**, it is possible to implement highly sensitive actuators.

[0241] Furthermore, since a moving coil method is used, a moving part of auto-focusing lens drive apparatus **20**B can be made lighter than when a moving magnet method is used.

[0242] To be precise, in "moving-magnet" camera-shake correction apparatus **10**A according to the second embodiment, the entirety of auto-focusing lens drive apparatus **20**B operates as a moving part. That is to say, as shown in FIG. **8**, moving-part component parts comprise lens barrel **12**A, lens holder **24**A, first and second focusing coils **26**A-**1** and **26**A-**2**, upper leaf spring **32**A, lower leaf spring **34**A, permanent magnet **28**A, and magnet holder **30**A. Consequently, the total weight of moving parts when using a moving magnet method is, for example, 1620 mg.

[0243] In contrast, in "moving-coil" camera-shake correction apparatus **10**B according to the third embodiment, as shown in FIG. **15**, moving-part component parts comprise the lens barrel, lens holder **24**B, first and second focusing coils **26**B-**1** and **26**B-**2**, camera-shake correction coils **18**B, and coil holder **44**B. Consequently, the total weight of moving parts when using a moving coil method is, for example, 765 mg.

[0244] Since the weight of moving parts can be reduced in this way, an offset correction current value can be improved, and as a result, the thrust of moving parts can be increased.

[0245] In the above-described third embodiment, permanent magnet **28**B comprises four first permanent magnet sections **282**B-**1** and four second permanent magnet sections **282**B-**2** disposed so as to face each other in first direction X and second direction Y, and to be spaced vertically in the optical axis O direction, but the number of first permanent magnet sections and second permanent magnet sections is not limited to four each, and, for example, eight sections may be used that are disposed facing in diagonal directions rather than in only a first and second direction. In this case, the number of camera-shake correction coils **18**B is also changed to eight. Also, in the above-described third embodiment, eight suspension wires **16**B rise up in pairs from the four corners of base section **142**B of base **14**B, but these ends may also rise up in pairs from the outer periphery of base section **142**B. Furthermore, the number of suspension wires **16**B is not limited to eight, and may be any plurality.

[0246] FIG. **17** is a vertical cross-sectional view of a sample variant in which the optical position detection section used in camera-shake correction apparatus **10**B according to the above-described third embodiment is used as a position detection section in camera-shake correction apparatus **10**A according to the above-described second embodiment.

[0247] In this sample variant, two photoreflectors **50**B are provided instead of two Hall devices **50**A, in the positions in which two Hall devices **50**A were disposed. That is to say, these two photoreflectors **50**B are disposed spaced from and facing two of four second permanent magnet sections **282**A-**2**. Two position information sections (pieces of reflective tape) **51**B are affixed to a moving part (auto-focusing lens drive apparatus **20**A) facing these two photoreflectors **50**B. In the example illustrated, two position information sections (pieces of reflective tape) **51**B are provided on (affixed to) the underside of tower leaf spring **34**A.

[0248] A position detection operation by this optical position detection section is similar to that of the third embodiment described earlier, and therefore a description thereof will be omitted here in order to simplify the explanation.

[0249] Although not illustrated, an above-described optical position detection section may of course also be used instead of a magnetic position detection section in camera-shake correction apparatus **10** according to the above-described first embodiment.

[0250] A typical aspect of the present invention is described below.

[0251] In a camera-shake correction apparatus according to a typical aspect of the present invention described above, an auto-focusing lens drive apparatus may be provided with: a lens holder that has a tubular section for holding a lens barrel, and that fixes a focusing coil so as to be positioned around the tubular section; a magnet holder that is disposed on the outer periphery of this lens holder and holds a permanent magnet; and a pair of leaf springs that support the lens holder so as to be displaceable in the optical axis direction when positioned in a radial direction.

[0252] According to a camera-shake correction apparatus according to a first aspect of the present invention, an auto-focusing lens drive apparatus may have an upper board mounted on the upper end of a magnet holder. In this case, other ends of a plurality of suspension wires are fixed to the upper board. Also, a pair of leaf springs may be fixed in linked fashion between the lens holder and magnet holder. The permanent magnet may include a plurality of permanent magnet sections disposed so as to face each other in a first direction and second direction. In this case, a camera-shake correction coil is disposed on the outside of the plurality of permanent magnet sections, the camera-shake correction apparatus may be provided with a plurality of coil boards that are disposed so as to face and be spaced from the plurality of permanent magnet sections, and on which a camera-shake correction coil is formed. The camera-shake correction apparatus may also include a shield cover that covers the plurality of coil boards, in this case, the plurality of coil boards may be attached to the inner wall of the shield cover. It is desirable for the camera-shake correction apparatus to have a position detection section for detecting the position of the auto-focusing lens drive apparatus with respect to a base. The position detection section may comprise, for example, a Hall device that is disposed so as to be spaced from and face the permanent magnet sections, and is mounted on the base.

[0253] According to a camera-shake correction apparatus according to another aspect of the present invention, a permanent magnet may comprise a plurality of first permanent magnet sections and a plurality of second permanent magnet sections that are disposed so as to face each other in a first direction and second direction, and that are disposed so as to be spaced from each other in the optical axis direction. The first permanent magnet sections and second permanent magnet sections are polarized into an N pole and S pole in a radial direction, and the first permanent magnet sections and second permanent magnet sections have magnetic poles that differ in the optical axis direction. Focusing coils comprise a first and second focusing coil that are fixed so as to be positioned around a tubular section of a lens holder, facing the plurality of first permanent magnet sections and the plurality of second permanent magnet sections respectively. A camera-shake correction coil comprises a plurality of camera-shake correction coils that are disposed inserted between the plurality of first permanent magnet sections and four second permanent magnet sections. The camera-shake correction apparatus is provided with a ring-shaped coil board on which a plurality of camera-shake correction coils are formed.

[0254] According to a camera-shake correction apparatus according to a second aspect of the present invention, a base may comprise a ring-shaped base section and a tubular section extending in an upward optical axis direction from the outer edge of this base section. In this case, a coil board is fixed to the upper end of the tubular section of the base, and a pair of leaf springs are fixed in linked fashion between a lens holder and magnet holder. Also, a plurality of suspension wires may rise up from the outer peripheral section of the base section. In this case, the magnet holder is provided with an upper ring-shaped end section, this upper ring-shaped end section may have a plurality of wire insertion holes into which the other ends of the plurality of suspension wires are inserted, and of the pair of leaf springs, the upper leaf spring in the upper optical axis direction may have a plurality of wire fixing holes into which the other ends of the plurality of suspension wires are inserted. The coil board may have a plurality of through-holes through which the plurality of suspension wires pass. It is desirable for the camera-shake correction apparatus to have a position detection section for detecting the position of an auto-focusing lens drive apparatus with respect to the base. The position detection section may comprise, for example, two Hall devices that are disposed so as to be spaced from and face at least two second permanent magnet sections that are disposed in a first direction and second direction among a plurality of second permanent magnet sections, and that are mounted on the base section. Instead of this, the position detection section may comprise at least two photoreflectors and at least two position information sections, disposed so as to face each other. In this case, at least two position information sections are disposed in the first direction and second direction on the underside of the lower leaf spring positioned in a lower optical axis direction among the pair of leaf springs, and at least two photoreflectors are mounted on the base section, disposed so as to be spaced from and face at least two position information sections respectively.

[0255] According to a camera-shake correction apparatus according to a third aspect of the present invention, the camera-shake correction apparatus is further provided with a coil holder that holds a coil board, and a base may comprise a ring-shaped base section and a tubular section having a plu-

rality of apertures extending in an upward optical axis direction from the outer edge of this base section. In this case, a magnet holder comprises a plurality of magnet holders that hold one first permanent magnet section and one second permanent magnet section respectively. The plurality of magnet holders are fixedly inserted into a plurality of apertures of the tubular section of the base, and a pair of leaf springs are fixed in linked fashion between a lens holder and the coil holder. Also, a plurality of suspension wires may rise up from the outer peripheral section of the base section. In this case, the coil holder is provided with an upper ring-shaped end section and a plurality of projecting sections that project in an outward radial direction from the outer peripheral section of this upper ring-shaped end section, and this plurality of projecting sections may have a plurality of wire fixing holes into which the other ends of the plurality of suspension wires are inserted. It is desirable for the camera-shake correction apparatus to have a position detection section for detecting the position of a moving part of an auto-focusing lens drive apparatus with respect to the base. The coil holder is further provided with a lower ring-shaped end section, and the above position detection section may comprise at least two photoreflectors and at least two position information sections, disposed so as to face each other. In this case, at least two position information sections are disposed in a first direction and second direction on the underside of the lower ring-shaped end section of the coil holder, and at least two photoreflectors are mounted on the base section, disposed so as to be spaced from and face at least two position information sections respectively.

[0256] The present invention has been described above with particular reference to embodiments thereof, but the present invention is not limited to these embodiments. It is understood that various variations and modifications in form and detail may be possible by those skilled in the art without departing from the spirit and scope of the present invention stipulated in the claims. For example, in the above embodiments, a magnetic position detection section comprising Hall devices or an optical position detection section that includes photoreflectors is used as a position detection section (position sensor), but another position detection section (position sensor) may also be used.

[0257] This application is entitled to and claims the benefit of Japanese Patent Application No. 2009-191619, filed on Aug. 21, 2009, and Japanese Patent Application No. 2010-158602, filed on Jul. 13, 2010, the disclosures of which including the specifications, drawings and abstracts are incorporated herein by reference in their entirety.

What is claimed is:

1. A lens drive apparatus that displaces a lens holder in a direction of an optical axis and a direction orthogonal to the optical axis, the lens drive apparatus comprising:

a coil that is assembled together with the lens holder to form an assembly;

a magnet that is disposed at a position facing the coil;

a magnet holder that holds the magnet; and

a housing to which the magnet is attached and which houses the assembly.

2. The lens drive apparatus according to claim **1**, wherein the housing includes an aperture into which the magnet holder is fitted from an outside of the housing.

3. The lens drive apparatus according to claim **2**, wherein the magnet holder that is fitted into the aperture covers the aperture.

4. The lens drive apparatus according to claim **1**, wherein the magnet holder holds and aligns a plurality of magnets with respect to each other.

5. The lens drive apparatus according to claim **1**, wherein the coil displaces the assembly in the direction orthogonal to the optical axis in collaboration with the magnet.

6. The lens drive apparatus according to claim **1**, comprising:

a base that is disposed so as to be spaced from the assembly; and

a plurality of suspension wires each having a first end fixed to the base and a second end fixed to the assembly, the suspension wires being configured to support the assembly such that the assembly is displaceable in the direction orthogonal to the optical axis.

7. The lens drive apparatus according to claim **1**, wherein:

the assembly includes:

a coil holder that holds the coil; and

a leaf spring that is attached to the coil holder and supports the lens holder such that the lens holder is displaceable in the direction of the optical axis.

8. The lens drive apparatus according to claim **1**, wherein the assembly includes a further coil that displaces the assembly in the direction of the optical axis in collaboration with the magnet.

9. The lens drive apparatus according to claim **1**, comprising:

a base that is disposed so as to be spaced from the assembly and has an aperture having a size greater than a displacement range of the optical axis resulting from displacement of the assembly in the direction orthogonal to the optical axis.

10. A camera module comprising:

the lens drive apparatus according to claim **1**; and

an imaging device that captures a subject image formed by means of a lens section held by the lens holder.

11. A camera comprising:

the camera module according to claim **10**; and

a control section that controls the camera module.

* * * * *