J. & L. REINERT.

DOOR OPENER.

APPLICATION FILED JULY 19, 1912.

1,089,963.

Patented Mar. 10, 1914.

3 SHEETS—SHEET 1.

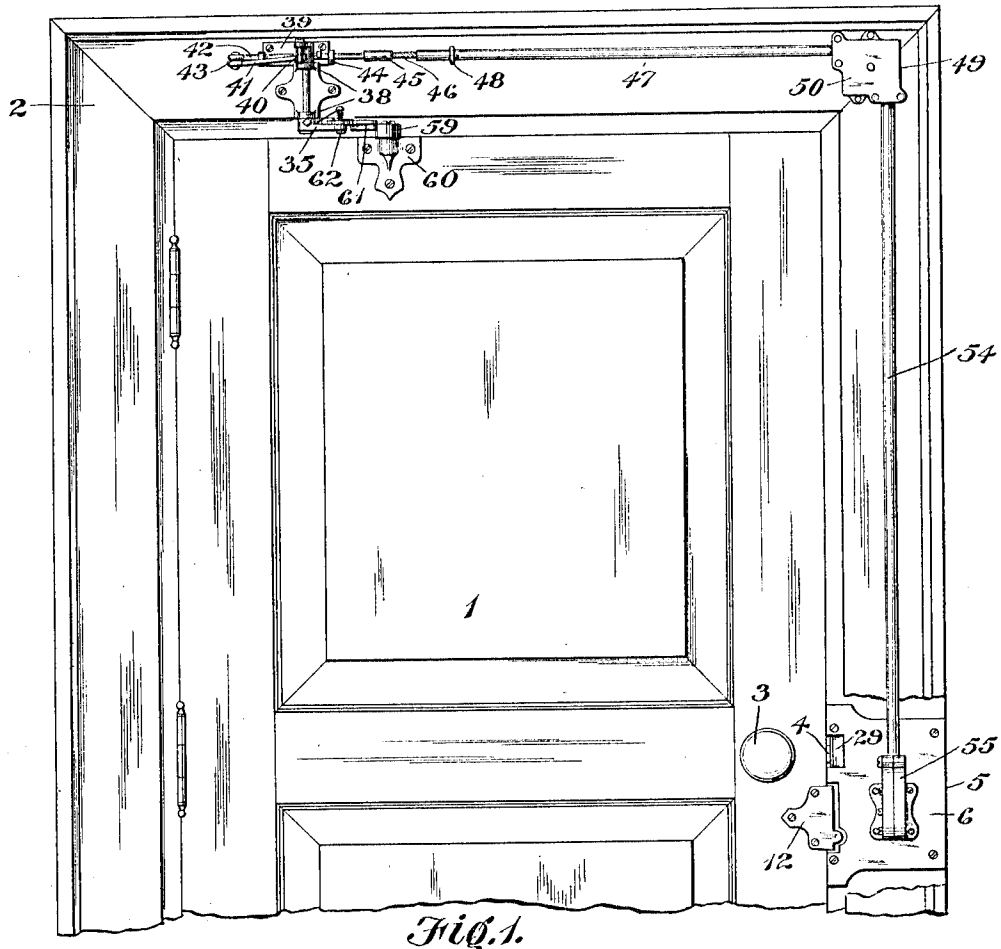

Fig. 1.

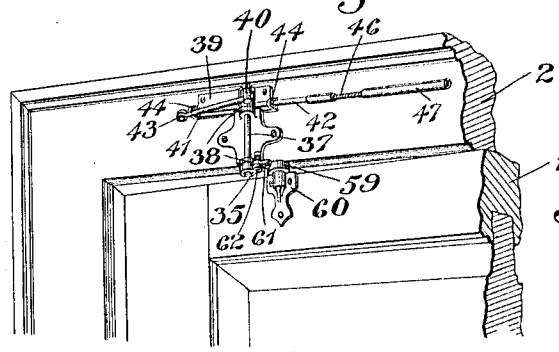

Fig. 2.

Witnesses

J. W. Pierce.

R. M. Smith.

Inventors

J. Reinert

L. Reinert

By Victor J. Evans

Attorney

J. & L. REINERT.

DOOR OPENER.

APPLICATION FILED JULY 19, 1912.

1,089,963.

Patented Mar. 10, 1914.

3 SHEETS—SHEET 2.

Fig. 5.

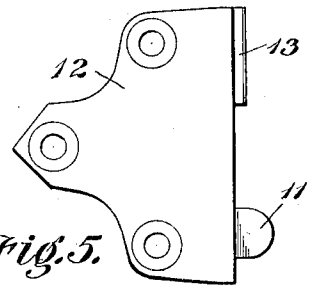

Fig. 6.

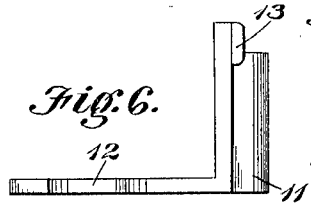

Fig. 7.

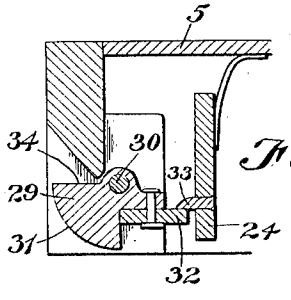

Fig. 8.

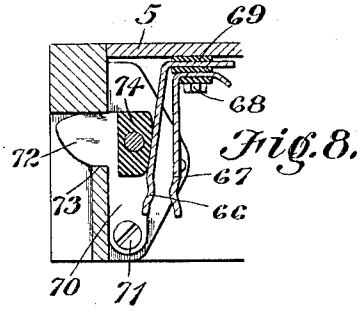

Fig. 3.

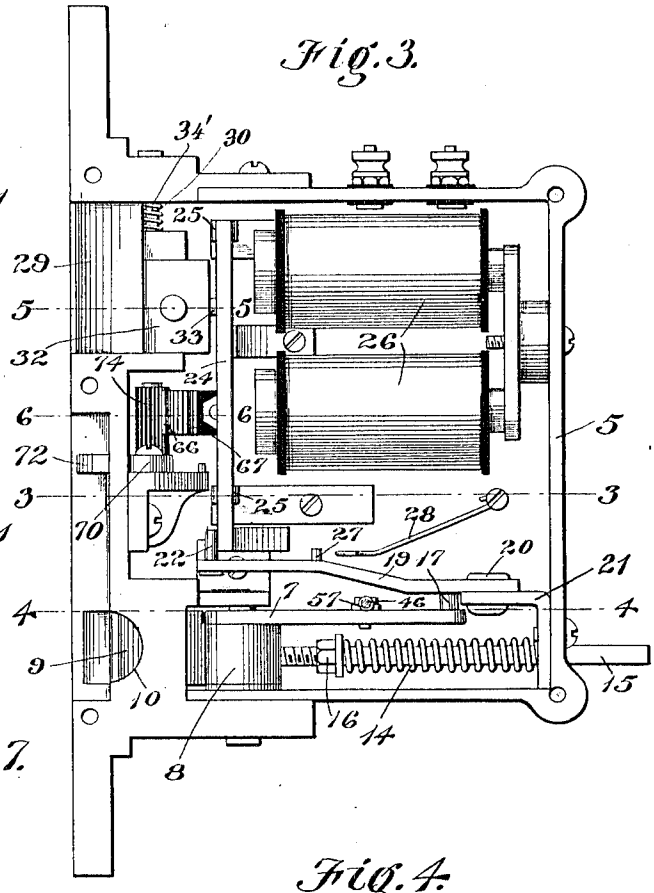

Fig. 4.

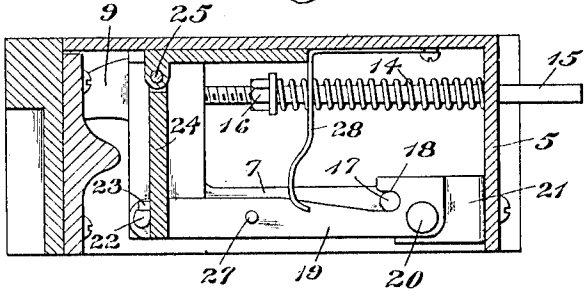

Witnesses

G. W. Pierce.

P. M. Smith.

Inventors

J. Reinert

L. Reinert

By Victor J. Evans

Attorney

COLUMBIA PLANOGRAPH CO., WASHINGTON, D. C.

J. & L. REINERT.

DOOR OPENER.

APPLICATION FILED JULY 19, 1912.

1,089,963.

Patented Mar. 10, 1914.

3 SHEETS—SHEET 3.

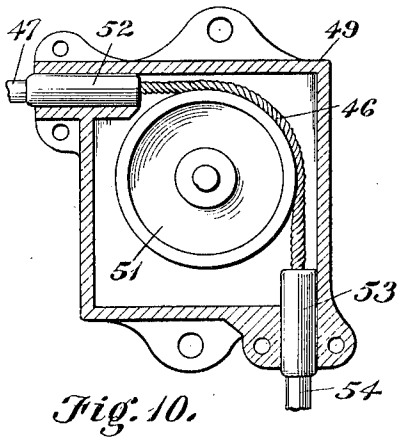

Fig. 10.

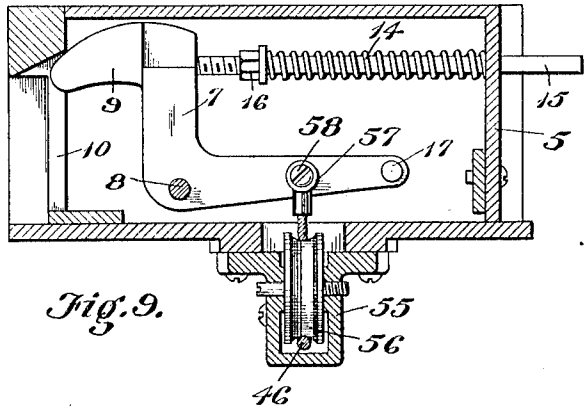

Fig. 9.

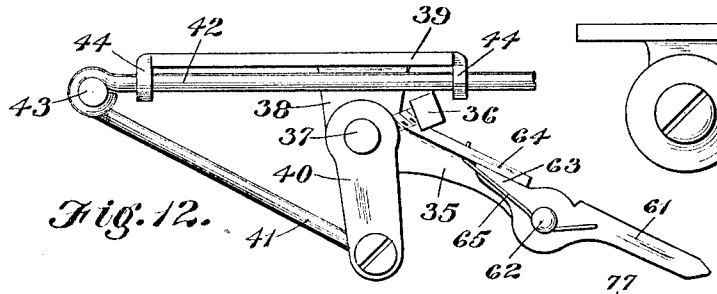

Fig. 12.

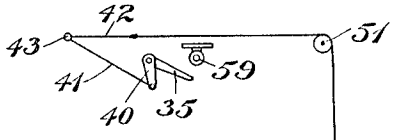

Fig. 11.

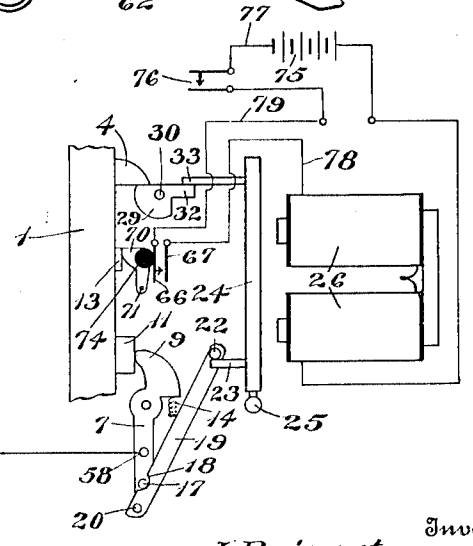

Witnesses.

G. W. Pierce.

P. M. Smith.

Inventors

J. Reinert

L. Reinert

By Victor J. Evans

Attorney

COLUMBIA PLANOGRAPH CO., WASHINGTON, D. C.

UNITED STATES PATENT OFFICE.

JACOB REINERT AND LOUIS REINERT, OF PITTSBURGH, PENNSYLVANIA.

DOOR-OPENER.

1,089,963. Specification of Letters Patent. Patented Mar. 10, 1914.

Application filed July 19, 1912. Serial No. 710,466.

To all whom it may concern:

Be it known that we, JACOB REINERT and LOUIS REINERT, citizens of the United States, residing at Pittsburgh, in the county of Allegheny and State of Pennsylvania, have invented new and useful Improvements in Door-Openers, of which the following is a specification.

This invention relates to door openers, the object in view being to provide electrically controlled mechanism, whereby a door may be released and partially opened by a person located at a distance from the door, the device being useful in private offices, factories, ware-houses, and public places, or wherever it is desirable to control admission through a doorway by a person in authority located at a distance therefrom.

With the above and other objects in view, the invention consists in the construction, combination and arrangement of parts, as will be hereinafter more fully described, illustrated in the accompanying drawings, and pointed out in the claims hereunto appended.

In the drawings: Figure 1 is an elevation of a door and door frame, showing the mechanism of this invention applied thereto. Fig. 2 is a perspective view of the upper portion of the door and door frame, showing the resetting lever and its connections. Fig. 3 is an enlarged elevation of the main casing of the device with the adjacent face plate removed. Fig. 4 is a horizontal section through the same, taken on the line 3—3 of Fig. 3. Fig. 5 is a face view of the door plate. Fig. 6 is a top edge view thereof. Fig. 7 is a detail horizontal section on the line 5—5 of Fig. 3. Fig. 8 is a detail horizontal section on the line 6—6 of Fig. 3. Fig. 9 is a horizontal section on the line 4—4 of Fig. 3. Fig. 10 is a vertical sectional view of the upper pulley box. Fig. 11 is a diagrammatic view of the electrical connections. Fig. 12 is a top plan view of the resetting lever and the device for operating the same.

Referring to Figs. 1 and 2, 1 designates a door, and 2 a door frame, the door being provided with the usual knob 3 for operating the latch bolt 4.

In carrying out this invention, we employ a main casing 5, embodying a cover or face plate 6, and secured to the door frame 2, approximately on the level of the usual door knob 3, as shown in Fig. 1. Within this casing and near the bottom thereof, is mounted a kick lever 7 of elbow form, the same being pivotally mounted on a stud 8. The kick lever is provided with a rounded nose 9 which works through an opening 10 in the inner edge of the casing, next to the door, so as to act against a kick shoulder 11 carried by a face plate 12 secured to the door, as shown in Fig. 1, said face plate being also provided with a circuit breaker operating shoulder 13, the purpose of which will hereinafter appear.

The kick lever is operated by means of a coiled expansion spring 14 which encircles a sliding stem or rod 15 mounted to operate through the outer wall of the casing, as shown, for example, in Fig. 9, said stem being pivotally attached at its inner end to the kick lever and being threaded, as shown, to receive a tension nut 16, by means of which the spring 14 may be given increased or decreased action on the kick lever in accordance with the size or weight of the door being operated upon.

At its rear extremity, the kick lever is provided with a stud 17 that enters a slot 18 in a trip lever 19 pivoted, at 20, to a bracket arm 21, as shown in Figs. 3 and 4. At its free end, the trip lever 19 is provided with a trip lever shoulder 22 which is adapted to come into contact with and be held by a shoulder 23 on an armature 24, the last-named element consisting of a vertically disposed plate hinged on a vertical axis, as shown at 25, so as to swing toward and away from an electro-magnet 26 mounted within the casing 5, as shown in Fig. 3. When said lever 19 is released by the movement of the armature 24 toward the magnet 26, a pin 27 on said lever comes into contact with a cushioning spring 28, the end portion of which is deflected, as shown in Fig. 4, so as to partially embrace and bear against the pin 27 to hold the lever 19 in a definite position, until it is again thrown outward in the act of resetting the kick lever 7, as will hereinafter appear.

Mounted in the upper portion of the casing 5 is a latch bolt dog 29 mounted to turn on a vertical pivot 30, and having a rounded face 31, as shown in Fig. 7. The dog is also provided with a shoulder 32 which is adapted to be held by a coöperating lip 33 on the armature 24. In closing the door, the door latch comes into contact with the rounded face 31 of said dog, and then snaps

in behind the inner shoulder or face 34 of said dog, where it is held until the armature is attracted by the electro-magnet, permitting the dog to turn on its pivot 30. This releases the latch and unlocks the door. The dog 29 is restored to its holding position by a spring 34'.

The resetting mechanism for returning the kick lever 7 to its retracted position comprises a resetting lever 35 which is connected fast by means of a set screw 36 to a vertical shaft 37 mounted in ears 38 on a bracket 39 secured to the door frame 2 above the door, as shown in Fig. 1. Mounted fast on the same shaft 37 is a crank arm 40, from which a push rod 41 extends to a slide rod 42, to which it is pivotally connected, at 43. This slide rod 42 extends through suitable guides 44 on the bracket 39, and is connected by means of a coupling 45 to a resetting cable 46. This cable passes through a horizontal cable tube 47 which is secured to the door frame at one end by means of a tube holder 48, and at the other end to a pulley box 49 secured to the door frame at one of the upper corners thereof, as shown in Fig. 1, said box comprising a removable face plate 50. Within the box 49 is mounted a revolving pulley 51, around which the cable 46 passes, said box having openings to receive the cable, and also to receive bushings 52 and 53, the bushing 52 having the adjacent extremity of the cable tube 47 inserted therein, as shown in Fig. 10. The other bushing 53 receives the upper extremity of a second vertically extending cable tube 54, the lower end of which enters a pulley box 55 secured to the face plate 6 of the casing 5, hereinabove described, and as shown in Fig. 1. Within the box 55 is mounted a pulley 56 which turns on a horizontal axis, as shown, and around which the cable 46 passes. The lower end of said cable has connected thereto an eye 57 which is fastened, at 58, to the backwardly extending arm of the kick lever 7.

The resetting lever is actuated by means of a roller 59 on a bracket 60 attached to the door near the upper edge thereof as shown in Fig. 1. It will now be understood that as the door is swung open, the roller 59 comes into contact with the resetting lever 55, thereby moving said lever outward and through the medium of the connections described drawing on the cable 46, thereby swinging the kick lever 7 back to its initial position, where it is held by the engagement of the shoulders 22 and 23 on the armature 24 and trip lever 19, respectively, the parts again assuming the position shown in Fig. 4.

In order to enable the roller 59 to pass by the lever 35 in the closing movement of the door, said lever 35 is provided with a pivoted extension 61. This tripping extension 61 is pivotally connected at 62 to the main body 35 of the lever, and is provided with a stop arm 63 which comes into contact with the stop flange 64 on the lever 35, a spring 65 serving to hold the tripping extension 61 in longitudinal alinement with the main body 35 of the lever. As the roller 59 returns, it swings the tripping extension 61 on its pivot 62, and after passing by the lever, the extension 61 is returned by the spring 65 to its normal position, so as to again be acted upon by the roller 59 when the door is thrown open.

In order to break the circuit, when the door is released and thrown open, we provide a circuit breaker which is shown in detail in Fig. 8, embodying two spring contact plates 66 and 67, to which the circuit wires are connected, said plates being fastened within the casing by means of a screw or bolt 68, and properly insulated from the casing, as shown at 69.

Mounted adjacent to the spring contacts referred to is a circuit breaking lever 70 pivotally mounted, at 71, and having a rounded nose 72 which projects through an opening 73 in the casing, so as to be acted upon by the shoulder 13 on the door plate 12, hereinabove described. The circuit breaking lever 70 is provided with an insulated shoulder 74, which operates against the contact plate 66, as shown in Fig. 8, so that when the door is closed, the shoulder 13 presses against the nose 72 of the lever 70 and holds the two contact plates 66 and 67 in electrical contact with each other. As soon as the door is thrown open, the spring contact plate 66 moves the lever 70 outward and breaks the contact and consequently the circuit, thus allowing the armature 24 to return to its normal position before the door is pushed open and the resetting means actuated, thereby economizing in the consumption of the current.

Referring now to Fig. 11, the battery, indicated at 75, may be located at any suitable point, and also the circuit closer or controlling switch 76. From the switch 76, one circuit wire 77 leads through the battery 75 to the electro-magnet 26. From the magnet, a wire 78 leads to the circuit breaker 70. From the circuit breaker, a wire 79 leads back to the switch 76.

It will now be understood that when the switch 76 is closed, and the circuit established, the electro-magnet 26 will attract the armature 24, thereby causing the shoulder 23 to be withdrawn from engagement with the shoulder 22, and also causing the lip 33 to recede from behind the shoulder 22 of the latch bolt dog 29. This simultaneously releases the trip lever 19 and said dog 29. The dog is thereby allowed to turn to release the latch bolt, and at the same time the spring 14 acts to turn the kick lever 27, the nose 9 thereof acting on the shoulder

11 of the plate 12, to throw the door open. As the door starts to open, the shoulder 13 moves out of contact with the nose 72 of the circuit breaking lever 70, thereby breaking the circuit and not using any of the current, until the door has been returned to its locked position, and the main switch 76 again operated to release the door in the same manner as previously described.

What is claimed is:

1. An electrically operated door opener, comprising an electric circuit, an electromagnet in said circuit, a circuit closing switch, an armature, a spring thrust kick lever mounted on the door frame and cooperating with the door, a trip lever having a jointed connection with said kick lever and held by the armature when the circuit is open and released by the armature when the circuit is closed, and a circuit breaker which is rendered effective when the door is released.

2. An electrically operated door opener, comprising an electric circuit, an electromagnet in said circuit, a circuit closing switch, an armature, a spring thrust kick lever mounted on the door frame and cooperating with the door, a trip lever having a jointed and sliding connection with said kick lever and held by the armature when the circuit is open and released by the armature when the circuit is closed, and a circuit breaker which is rendered effective when the door is released and held ineffective by the door when closed.

3. An electrically operated door opener, comprising an electric circuit, an electromagnet in said circuit, a circuit closing switch, an armature, a spring thrust kick lever mounted on the door frame and cooperating with the door, said kick lever being held by the armature when the circuit is opened and released by the armature when the circuit is closed, a circuit breaking lever on the door frame held back when the door is closed, and two circuit breaking contacts, one of which consists of a spring acting to press said circuit breaking lever outwardly as the door is released.

In testimony whereof we affix our signatures in presence of two witnesses.

JACOB REINERT.
LOUIS REINERT.

Witnesses:
ELIZABETH W. SNYDER,
JACOB MERTZ.

Copies of this patent may be obtained for five cents each, by addressing the "Commissioner of Patents, Washington, D. C."