H. F. PROVANDIE.

MACHINE FOR SEALING BOTTOM PIECES IN PAPER CUPS.

APPLICATION FILED AUG. 30, 1913.

1,110,990.

Patented Sept. 15, 1914.

2 SHEETS—SHEET 1.

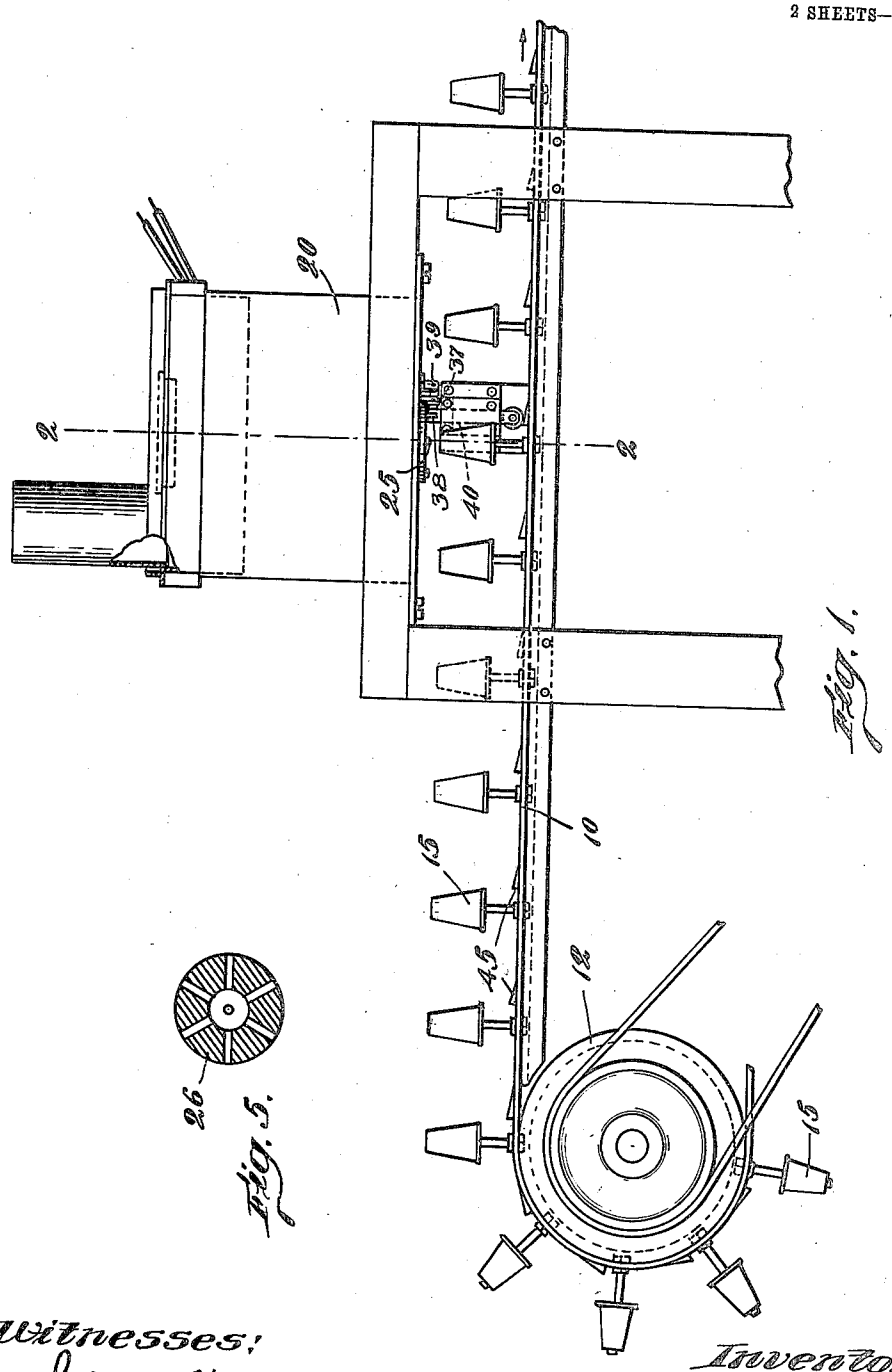

FIG. 1.

FIG. 5.

Witnesses:
John P. Wyman
Amos L. Taylor

Inventor:
Herbert F. Provandie

H. F. PROVANDIE.

MACHINE FOR SEALING BOTTOM PIECES IN PAPER CUPS.

APPLICATION FILED AUG. 30, 1913.

1,110,990.

Patented Sept. 15, 1914.

2 SHEETS—SHEET 2.

Fig. 2.

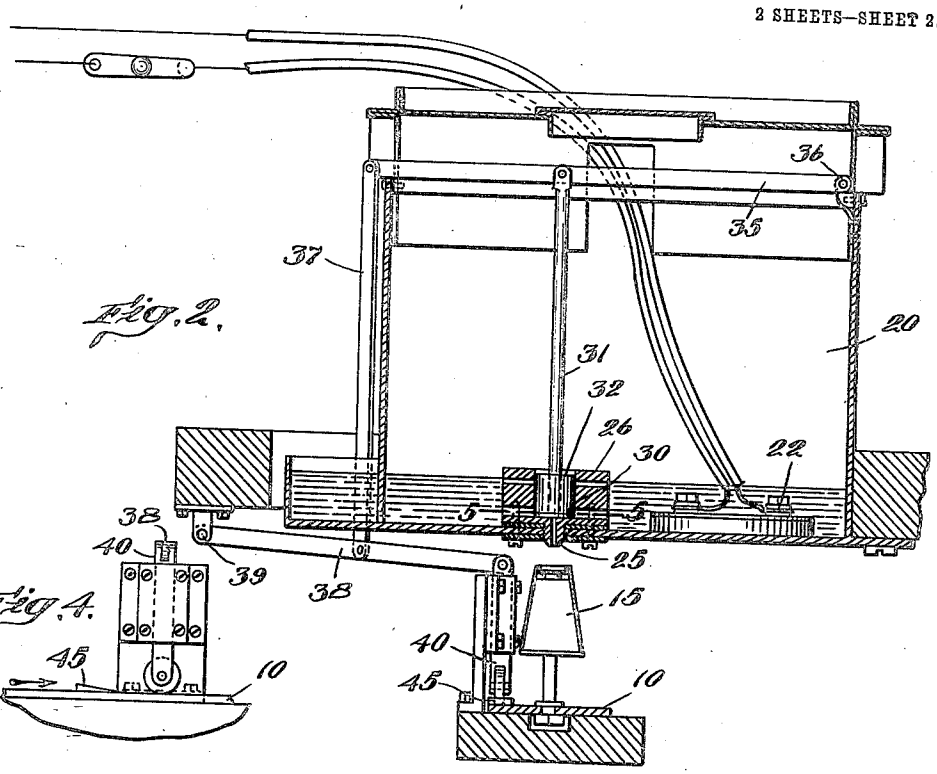

Fig. 4.

Fig. 3.

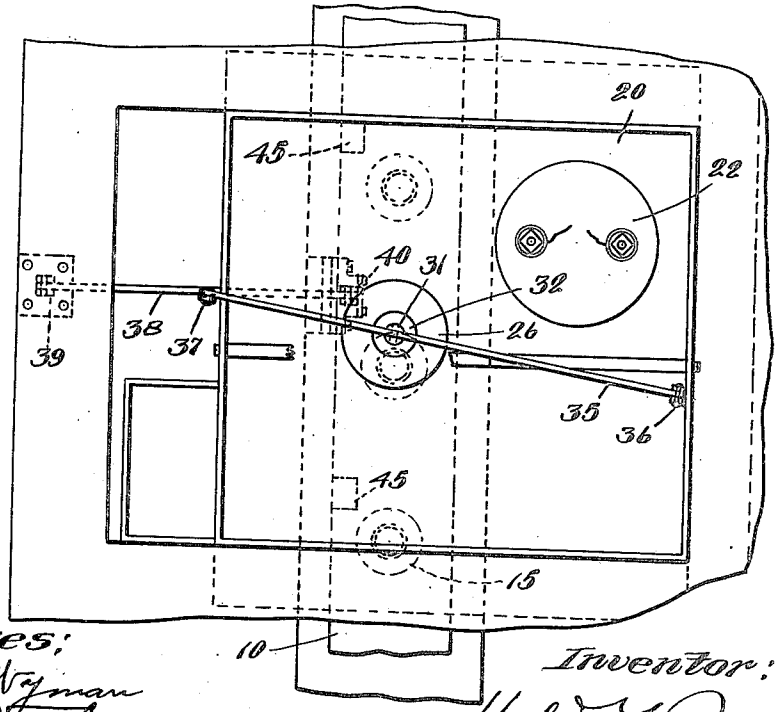

Witnesses:
John P. Wyman
Amos L. Taylor

Inventor:
Herbert F. Provandie

UNITED STATES PATENT OFFICE.

HERBERT F. PROVANDIE, OF MELROSE, MASSACHUSETTS, ASSIGNOR TO AMERICAN WATER SUPPLY COMPANY OF NEW ENGLAND, OF BOSTON, MASSACHUSETTS, A CORPORATION OF MASSACHUSETTS.

MACHINE FOR SEALING BOTTOM PIECES IN PAPER CUPS.

1,110,990. Specification of Letters Patent. Patented Sept. 15, 1914.

Application filed August 30, 1913. Serial No. 787,429.

To all whom it may concern:

Be it known that I, HERBERT F. PROVANDIE, a citizen of the United States, residing at Melrose, in the county of Middlesex and State of Massachusetts, have invented an Improvement in Machines for Sealing Bottom Pieces in Paper Cups, of which the following is a specification.

This invention relates to machines for sealing the bottom-pieces of paper drinking-cups. In certain forms of paper drinking-cups circular bottom-pieces or disks composed of heavy paper or light card-board are arranged near the lower end of a frusto-conical cup-body, the end-portion of said body projecting a short distance below the bottom-piece and forming a flange at the bottom of the cup, and it is desirable to seal the bottom-piece in place by a small quantity of sealing substance or material, such for instance as liquid paraffin-wax which is deposited on the exterior of the bottom-piece while the cup is held in inverted position, which material spreads over the surface of the bottom-piece and upon congealing forms a fillet at the junction of the bottom-piece and cup-body.

This invention has for its object the production of a machine adapted to automatically deposit a small quantity of liquid paraffin-wax or other sealing substance on the bottom-pieces of the cups, while they are held in inverted position, and subsequently to continue to support the cups in inverted position for a short period of time during which time the liquid paraffin-wax congeals. The machine involves an endless-carrier adapted to carry a large number of cups which are supported in inverted position and to admit of unsealed cups being supplied at one end and the sealed cups to be removed from the other end; and also a reservoir containing liquid paraffin-wax having a delivery-nozzle for delivering liquid paraffin-wax and depositing it upon the bottom-pieces of the inverted cups while said cups are moved along beneath said nozzle by the carrier; and a valve controlling the delivery of liquid paraffin-wax, and means operated by the moving-carrier or by other means to open said valve at the proper moments with respect to the movement of the carrier for short periods of time, to deliver small quantities of liquid paraffin-wax and deposit the same on the bottom-pieces of the inverted cups.

Figure 1 is a front elevation of a portion of the sealing-machine embodying this invention. Fig. 2 is an enlarged vertical section of the machine shown in Fig. 1, taken on the dotted line 2—2. Fig. 3 is a plan view of Fig. 2, the cover of the reservoir containing the sealing material being removed. Fig. 4 is a detail of the actuating-means for the valve-controlling lever. Fig. 5 is a horizontal section of the valve-case taken on the dotted line 5—5, Fig. 2.

10 represents the endless-carrier or conveyer which passes over suitable pulleys 12, one only of which is here shown, and one or both of which may be power-driven, so that the endless-carrier is moved continuously. Said carrier is arranged in a vertical plane, its rotatable end-supports being rotated about horizontal axes. A plurality of cup-forms 15 are arranged on said endless-carrier, being stationarily supported thereon. The carrier is made of suitable length to support a large number of cup-forms, and as it is moved those cup-forms on the upper side of the carrier occupy inverted positions, and it is desired and intended that the cups to be sealed shall be placed on said inverted cup-forms at one end of the carrier and subsequently removed therefrom at the other end of the carrier. Substantially midway the length of, and above the carrier a reservoir 20 is supported, which is adapted to contain a supply of liquid paraffin-wax or other sealing substance, and in case paraffin-wax is employed a suitable heating-device 22, see Fig. 2 is arranged in the reservoir for liquefying the wax. Said reservoir is supplied with a suitable cover and vent. Said reservoir has arranged at its bottom a valve, which is located above the path of movement of the cups, and, the bottom of the reservoir has an orifice located beneath said valve through which a delivery-nozzle 25, projects, which nozzle depends from the lower end of a valve-case 26, which rests upon the top of the bottom wall of the reservoir and is or may be attached thereto.

A delivery orifice extends through the nozzle and communicates with an interior compartment in the valve-case, and said valve-case has numerous inlet passages leading from the outside to said interior compart-

ment, whereby said interior compartment is in open communication with the reservoir, thus admitting the liquid paraffin-wax or other sealing material to said compartment.

The valve here shown consists of a plate 30, fastened to the lower end of a rod 31, and arranged in the interior compartment of the valve-case, and a weight 32 is also arranged on said rod and here shown as occupying a position in the interior compartment of the valve-case just above the valve-plate, said weight acting, when permitted, to move downward the valve-plate 30 to close the delivery orifice. The valve-rod 31 is loosely connected at its upper end to a lever 35, pivoted at one end, at 36, to an ear on the wall of the reservoir, its other end being extended beyond the opposite wall of the reservoir and through the cover-flange, and has connected with it the upper end of a link 37, the lower end of which link is loosely connected to an intermediate point on the lever 38, pivoted at one end, at 39, the other end of said lever being loosely connected to the upper end of a vertically sliding-bar 40, arranged in suitable vertically arranged guideways and extended downward toward the carrier, and its lower end, with or without a roll thereon, is arranged for engagement with the carrier. Said carrier bears a plurality of projections 45, made with upwardly inclined tops, and as the carrier moves along said inclined projections pass beneath the sliding-bar and act to lift it a short distance and then to permit it to suddenly drop. As the sliding bar is lifted the valve-rod and valve operated by it are correspondingly lifted and the delivery orifice opened, and, as said sliding bar is permitted to resume its normal position, the valve is restored to normal position and the delivery-orifice closed. The means here shown for repeatedly operating the valve to open the delivery orifice for short periods of time and permit small quantites of liquid paraffin-wax to be delivered is simple to construct and convenient to operate, but the invention is not limited to the particular means here shown and operated by the carrier, for accomplishing this result.

I claim:—

In a machine for sealing bottom pieces of paper cups, the combination with an endless flexible carrier, a plurality of cup forms arranged thereon in inverted position, means for moving the carrier, a reservoir arranged above the carrier, a delivery nozzle depending from the reservoir, a valve arranged above the delivery nozzle and including a case having a chamber and a series of distinct points of communication with the reservoir, the valve being operative in the chamber, a weighted valve rod rising from the valve, and means on the endless carrier to actuate said valve in opposition to the weight.

In testimony whereof, I have signed my name to this specification, in the presence of two subscribing witnesses.

HERBERT F. PROVANDIE.

Witnesses:
JOHN P. WYMAN,
ANSON L. TAYLOR.