No. 838,122. PATENTED DEC. 11, 1906.

A. T. KRUSE.

SHEET METAL CAN.

APPLICATION FILED OCT. 12, 1905.

2 SHEETS—SHEET 1.

Fig. 1.

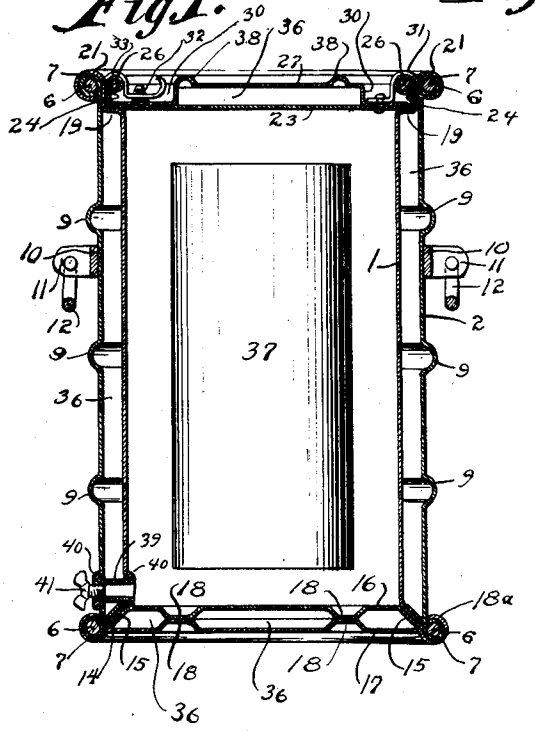

Fig. 2.

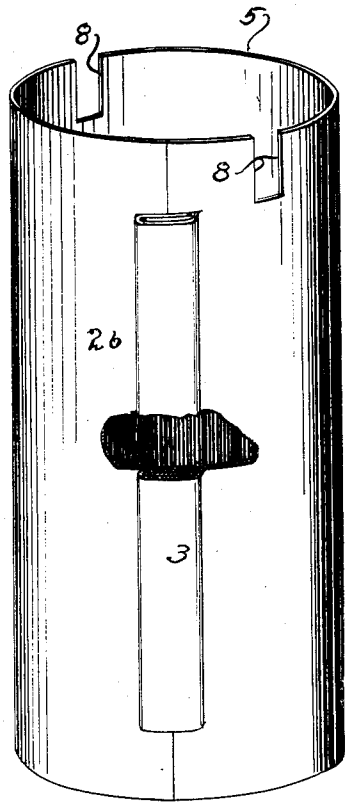

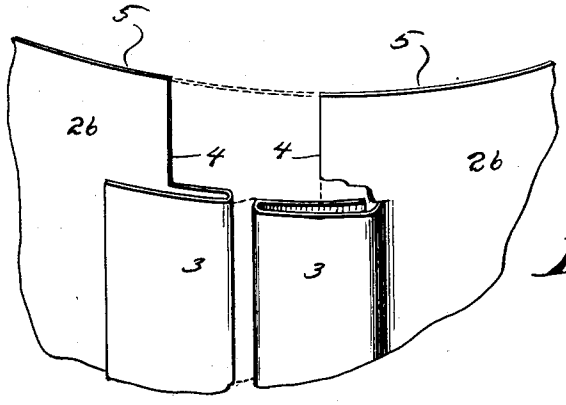

Fig. 3.

WITNESSES

Jos. D. Hosler

Walter Fenn

INVENTOR

Alfred T. Kruse.

BY

Obed B. Billman

His ATTORNEY

No. 838,122. PATENTED DEC. 11, 1906.

A. T. KRUSE.

SHEET METAL CAN.

APPLICATION FILED OCT. 12, 1905.

2 SHEETS—SHEET 2.

Fig. 4.

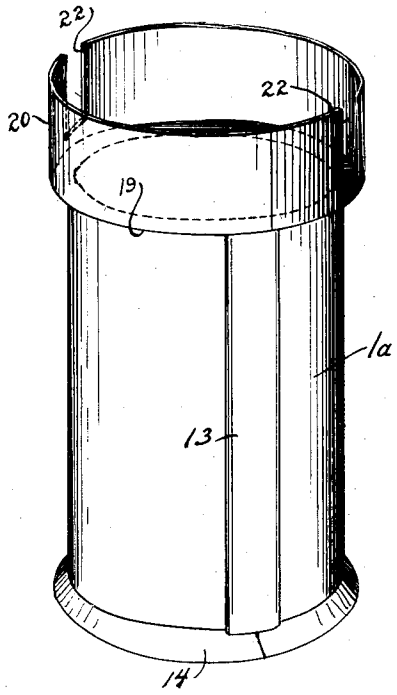

Fig. 5.

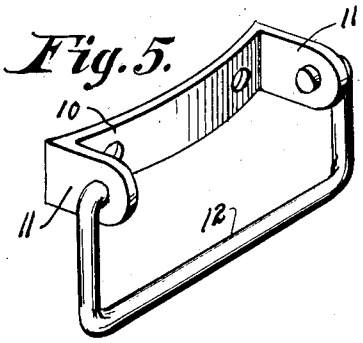

Fig. 6.

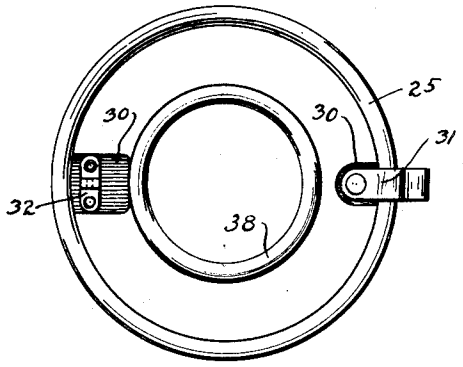

Fig. 8.

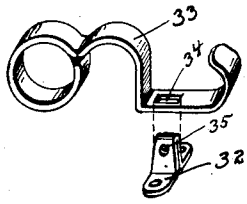

Fig. 7.

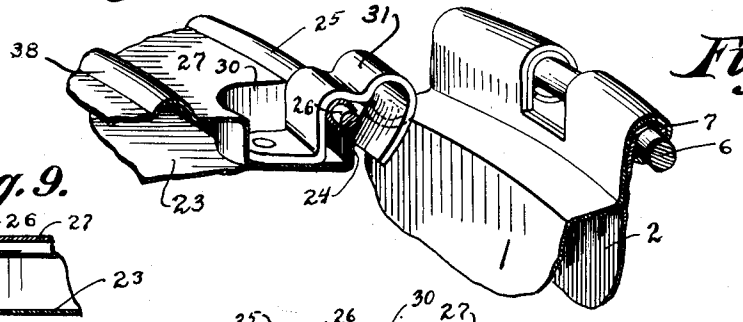

Fig. 9.

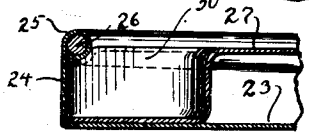

Fig. 10.

WITNESSES

Jos. J. Hosler.

E. Walter Gram

INVENTOR

Alfred T. Kruse.

BY

Obed C. Billman

His ATTORNEY

UNITED STATES PATENT OFFICE.

ALFRED T. KRUSE, OF DEFIANCE, OHIO, ASSIGNOR TO THE AMERICAN STEEL PACKAGE COMPANY, OF DEFIANCE, OHIO, A CORPORATION OF OHIO.

SHEET-METAL CAN.

No. 838,122. Specification of Letters Patent. Patented Dec. 11, 1906.

Application filed October 12, 1905. Serial No. 282,428.

To all whom it may concern:

Be it known that I, ALFRED T. KRUSE, a citizen of the United States, residing at Defiance, in the county of Defiance and State of Ohio, have invented new and useful Improvements in Sheet-Metal Cans, of which the following is a specification.

The invention relates to improvements in sheet-metal cans specially designed for the shipping and storing of ice-cream and other substances which it may be desired to have kept cool in transportation and storage.

The paramount object of the invention is to produce a generally improved can of this class designed to receive and contain the ordinary standard ice-cream can which will possess great strength and durability and which, by reason of special features of construction provided by the formation of the sheet metal, will be better adapted to its intended purposes than any other device of the same class with which I am acquainted.

The ordinary wooden tubs now in common use are open to many objections, chief among which are that they are generally without a lid or cover, require a large amount of ice to keep their contents cool, and soon become decayed and filthy.

By means of the covered sheet-metal can herein shown and described the objections named are obviated and a generally-improved receptacle is provided.

The particular features of the improved receptacle or can are the air-chambers formed between an inner and outer vessel and an improved lid or cover mounted and interposed between the upper ends of said inner and outer vessels and flush with the same.

Further objects and advantages of the invention will appear from the following description, taken in connection with the accompanying drawings.

Referring now to the drawings forming a part of this specification, Figure 1 is a sectional view of the improved can or receptacle. Fig. 2 is a perspective view of the outer vessel of the same. Fig. 3 is a detached detailed view showing the manner of forming the seam of the outer vessel. Fig. 4 is a perspective view of the inner vessel. Fig. 5 is a detailed view of one of the handles attached to the sides of the outer vessel. Fig. 6 is a top plan view of the lid or cover. Fig. 7 is a detailed view of the hinge connection of the lid or cover with the can proper. Fig. 8 is a detailed view of the locking mechanism for the lid or cover. Fig. 9 is a cross-sectional view of a portion of the lid or cover, showing peripheral or annular beading of same. Fig. 10 is a similar view showing one of the oppositely-disposed recesses formed in the lid or cover.

Similar numerals of reference designate like parts throughout all the figures of the drawings.

The improved can or receptacle comprises an inner and outer cylindrical vessel 1 and 2, preferably formed from a blank of sheet metal 1^a and 2^b, respectively, of cylindrical form, as most clearly shown in Figs. 4 and 2 of the drawings.

The blank 2^b, forming the outer cylindrical vessel 2, has its edges bent over and about to interlock with each other (see Fig. 3) to form a seam 3, and opposite the bent-over portions of the edges is a cut-away portion or recess 4 of a depth approximately corresponding with the width of the marginal edges 5, adapted to be bent over and about a wire 6 to form an annular circumferential beading 7 at the upper and lower edges of the can proper, as shown most clearly in Fig. 1 of the drawings.

At the proper edges of the blank 2^b (see Fig. 2) there are found oppositely-disposed recesses 8, adapted to receive the hinge and lock fastenings of the lid or cover, to be hereinafter described.

The outer vessel 2 is provided with a series of circumferential outwardly-extending corrugations 9 and a pair of straps 10, provided with lugs 11, carrying handles 12, whereby the vessel proper may be lifted about.

Referring now to the inner vessel 1, it will be observed upon reference to Fig. 4 that the blank 1^a is united by means of a seam 13, similar to the seam 3, hereinbefore referred to, and is provided at its lower edge with a downwardly and outwardly extending annular flange 14, adapted to be engaged by a similarly-shaped annular flange 15, formed about the base or bottom 16 of the inner vessel, the latter being bent over and about said annular flange 14 to form a seat for and support the same.

It will be seen that the outer edge of the annular flange 15 rests and is supported against the inner meeting edges of the outer vessel 1

and its bottom 17, and the bottom 16 is further supported by means of the coacting annular supporting-ribs 18, formed in the bottoms of the inner and outer vessels, as shown most clearly in Fig. 1 of the drawings.

The bottom 17 of the outer vessel has its edges bent over and about the beading 7 at the lower edge of the outer vessel to form a double or second strengthening-beading 18^a about this portion of the improved can or receptacle.

The upper portion of the inner vessel, formed of the blank 1^a, is bent outwardly to form an annular supporting flange or shoulder 19 and is then bent to form the marginal flange 20, (see Fig. 4,) adapted to have the lower portion of the flange 20 rest within the upper portion of the outer vessel and the upper portion thereof bent over and about the beading 7 at the upper portion of the outer vessel to form a double or second strengthening-beading 21 about the portion of the improved can or receptacle.

It will also be seen upon referring to Fig. 4 that the upper portion of the blank 1^a, forming the inner vessel, is provided with oppositely-disposed recesses 22, adapted to register with the recesses 8 of the outer vessel and with them adapted to afford an opening about the wire 6 for the reception and fastening of the hinge and lock fastenings of the lid or cover, to now be described.

Referring to Figs. 1 and 6, it will be seen that the lid or cover is formed of two disks, the first or inner one, 23, of which is provided with an annular flange 24 and an annular beading 25, formed by having the upper edges of the flange 24 bent over and about a wire 26. The second or outer disk 27 is provided with an annular flange 28, (see Fig. 9,) resting within the flange 24 and provided with an annular recess 29, forming a seat for the annular beading 25. The second or outer disk 27 is provided with oppositely-disposed recesses 30, adapted to register with the recesses 8 and 22, hereinbefore referred to, and afford pockets within which the hinge-strap 31 and lug or stud 32 are attached.

Upon referring to Figs. 7 and 8, it will be seen that the hinge-strap 31 extends up and over the annular beading 25 and is fastened to the wire 6 by being bent over and about the same and flush with the annular beading 7 at the upper edges of the can. The hasp-strap 33 is similarly attached to the wire 6 and is bent to conform to the contour of the beading 25 of the lid or cover and down to take within the adjacent recess 30 and is provided with the opening 34, adapted to take over the lug or stud 32. A small opening 35 is formed in the lug or stud 32, affording means for securely locking or sealing the lid or cover in its closed position. Furthermore, it will be seen that air-chambers 36 are provided between the side and end walls of the inner and outer vessels, providing perfect refrigeration, whereby a great saving in ice is accomplished. The ordinary standard ice-cream can 37 is employed and ice packed about the walls of the same as usual. In the present instance it will be seen that these air-chambers are formed between the inner and outer bottom and one between the inner and outer walls of the lid or cover. This number however, may be varied as may be found necessary or desirable to meet varying conditions or requirements.

An annular beading 38 is formed about the outer wall of the lid or cover, and the name of the party purchasing and numbers may be embossed in the metal, if desired.

A drain-opening is formed in the inner and outer vessels by means of a tubing 39 and secured by means of collars 40, screwed thereto. A thumb-screw plug 41, screwed into the outer end of the tubing 39, is adapted to open and close.

Having described my invention without having attempted to set forth all the modes of its use or all the forms in which it may be made, I declare that what I claim, and desire to secure by Letters Patent, is—

1. A sheet-metal can, consisting of an inner and outer vessel, an annular beading formed about the upper and lower edges of said outer vessel and inclosing a wire, a bottom secured to the outer vessel by having its edges bent over and about said annular beading, a bottom secured to said inner vessel by means of an annular supporting-flange, an annular supporting flange or shoulder formed about the upper edge of said inner vessel and adapted to be bent over and about the annular beading formed about the upper edges of the outer vessel, a lid or cover mounted and interposed between the upper ends of said inner and outer vessels, and means for securing the same therein.

2. A sheet-metal can or receptacle, consisting of an inner and outer vessel, an annular beading formed about the upper and lower edges of said outer vessel, a bottom secured to the lower edge of said outer vessel by having its edge bent over and about to form a second beading, a bottom secured to the inner vessel by means of an annular supporting-flange, an annular supporting flange or shoulder formed about the upper edge of said inner vessel, a beading formed therewith and inclosing the beading formed about the upper edge of the outer vessel, and a lid or cover mounted therein.

3. A sheet-metal can or receptacle, comprising an inner and outer vessel united at their upper edges by means of a double annular beading and strengthened and supported at their lower edges by means of an annular supporting-flange and double beading formed about the lower edges of the inner and outer vessels, respectively.

4. A sheet-metal receptacle, comprising an outer vessel provided with a bottom secured thereto by means of an annular beading, an inner vessel provided with a bottom secured thereto by means of an annular supporting-flange, an annular beading formed on the upper edges of said outer and inner vessels, and a lid or cover mounted within the upper edge of the receptacle.

5. In a sheet-metal receptacle, the combination with an inner and outer vessel secured at their tops by means of an annular double beading; of a bottom secured to the inner vessel by means of an annular downwardly and outwardly extending flange, and a bottom secured to the outer vessel by means of an annular beading and abutting against said downwardly and outwardly extending flange.

6. In a sheet-metal receptacle, the combination with an inner and outer vessel providing air-chambers between the walls thereof and secured at their tops by having their edges bent over and about to form an annular beading; of a lid or cover provided with an annular beading mounted and interposed between the ends of said inner and outer vessels, and means for securing said lid or cover therein.

7. A lid or cover for sheet-metal receptacles, consisting of two plates of sheet metal united to form an air-chamber, one of the plates being provided with an annular upwardly-extending flange and beading and the other with a downwardly-extending flange and an annular recess forming a seat for said beading.

8. In a sheet-metal receptacle, the combination with an inner and outer vessel; of a two-part bottom having annular supporting-ribs, providing air-chambers, said parts being secured to said inner and outer vessels by means of an annular flange and beading respectively.

9. In a sheet-metal receptacle, the combination with an inner and outer receptacle connected at their upper edges by means of an annular beading inclosing a wire and provided with oppositely-disposed recesses; of a lid or cover mounted therein and provided with a hinge-strap and hasp-strap taking into said recesses and over and about said wire.

10. In a sheet-metal receptacle, the combination with an inner vessel provided with an annular supporting flange or shoulder and an upwardly-extending flange adapted to rest within the upper portion of the outer vessel; of an outer vessel secured thereto by means of an annular double beading formed at the upper edges of the vessels, and a two-part lid or cover mounted upon and within said supporting-shoulder and upwardly-extending flange, respectively, and provided with an annular beading within said annular double beading.

11. In a sheet-metal receptacle, the combination with an inner and outer receptacle spaced apart so as to form air-chambers and having their upper edges rolled into an annular beading inclosing a wire; of a recess in the walls of said receptacles adjacent to such beading, a lid for the receptacle of two parts spaced apart so as to form an air-space and provided with a hinge-strap taking into said recess and over and about said wire.

In testimony whereof I affix my signature in presence of two subscribing witnesses.

ALFRED T. KRUSE.

Witnesses:
CURTIS M. WILLOCK,
MAY PARTEE.