May 11, 1965 W. LIMBERGER 3,182,578

APPARATUS FOR MAKING COPIES

Filed Nov. 28, 1962

FIG. 2

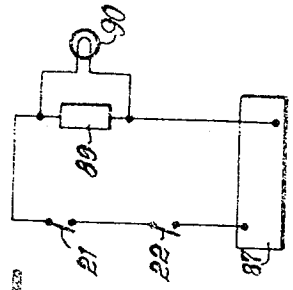

FIG. 3

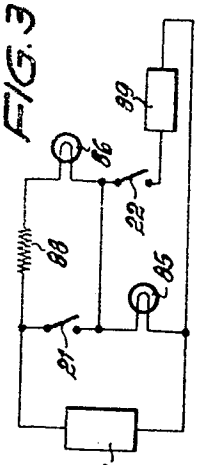

FIG. 1

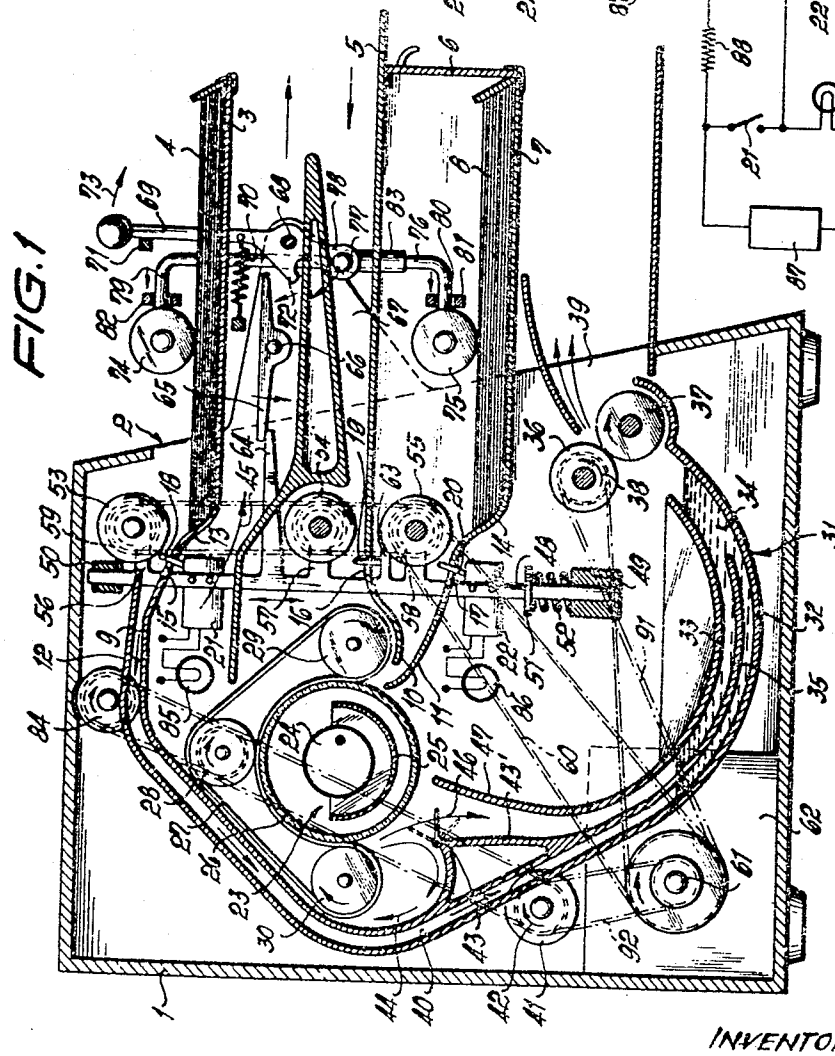

INVENTOR
Walter Limberger

BY Ralph G. Ross

AGENT

United States Patent Office 3,182,578 Patented May 11, 1965

3,182,578

APPARATUS FOR MAKING COPIES

Walter Limberger, Hamburg-Poppenbuttel, Germany, assignor to Lumoprint Zindler KG., Hamburg, Germany

Filed Nov. 28, 1962, Ser. No. 240,630
Claims priority, application Germany, Dec. 7, 1961, L 40,656
7 Claims. (Cl. 95—77.5)

The present invention relates to an apparatus for making copies and, more particularly, to a copying device using sheet material and including an image-transfer station for transferring the image from an original or master to a receiving sheet or, alternatively, from the master to a transfer sheet and thereafter to a receiving sheet (commonly called copy sheet); such apparatus may comprise a developing and a fixing device and one or more stack holders or magazines for the receiving and/or image transferring material.

It has been proposed heretofore, in connection with apparatus of this type which are using the diffusion method to move a stack including using the diffusion method, to feed a stack of juxtaposed sheets including toward the apparatus and to separate at least the positive sheet from the other sheets before inserting them into the apparatus. Moreover, it is known to introduce a positive sheet into the apparatus by actuating a lever and maintain the sheet in a position of readiness while a negative sheet is inserted by the operator manually together with the original into the exposure means.

Such apparatus is disadvantageous in that at least two sheets must be handled manually and with certain proposed devices, care must be taken that, upon inserting of the sheets, a prescribed relationship of the edges must be maintained, e.g. with respect to the leading edge of the original. Such apparatuses require careful operation and experienced personnel. In addition to this it is disadvantageous and time consuming for the operator to withdraw the copy sheets from the container or package for each copy, to juxtapose them with the original and then introduce them as part of a stack into the apparatus.

The object of the invention is to avoid these drawbacks and to provide an apparatus in which only the original needs to be introduced manually whereupon, after actuating a lever, the copy sheet or sheets are supplied automatically to the processing station.

An apparatus fulfilling this general object is only known for use with copy material in the form of a band and requires a relatively complicated control arrangement including a switch roller. In contradiction, the device of the invention uses supply magazines or holders charged with the stacks of copy sheets. An important advantage is gained by the present invention since the sheet ware delivered in packaged stacks are removed from their wrappings and stored in commercially available units within the apparatus. According to the invention an actuating lever is provided to operate shifting means for properly advancing the copy sheet or sheets and the original into the apparatus, in which, according to one embodiment, a receiving sheet and the original and according to another embodiment, a transfer sheet and the original are advanced along a transport path.

The production of copies is thus greatly simplified and the invention can be embodied in a table apparatus which may be used for any purpose and particularly at any time to make copies.

According to a preferred embodiment the actuating lever is coupled with one or two shifting rollers co-operating with the magazine or magazines of the copy sheets, so

as to displace at least one sheet into the region of the transport or drive means.

A further object of the invention is to provide an apparatus in which the feeding of the copy sheet is achieved by relatively simple means.

Another object of the invention is to provide feeding and transporting means capable of synchronizing the simultaneous introduction and displacement of a plurality of copy sheets.

Another object of the invention is to provide an apparatus in which the processing stations are actuated only upon insertion of the proper copy sheet or sheets.

These objects are attained in accordance with the invention by means of an actuating lever adapted to displace a transport or drive means from an inoperative to an operative position for properly advancing the copy sheet or sheets and the original into the apparatus are actuated.

According to a preferred embodiment of the invention, feed means is provided for inserting the copy sheets and the original arranged in superposed positions, while the drive means includes powered rollers driven in the direction of sheet insertion and arranged on a common mounting means or support movable substantially vertically, i.e. perpendicular to the plane of the introduction path of the sheets, for displacing said rollers towards abutment surfaces at the inlets of the sheet-transport paths. The present invention also contemplates providing the abutments, which serve as stops for the copy and master sheets, on the mounting means or supports of the transport rollers so that the latter are brought into engagement with the sheets simultaneously with withdrawal of the abutments from their paths.

According to another embodiment of the invention, provision is made for switching arms for the receiving sheet, or image transfer and image receiving sheet to extend into the introduction path or paths for actuating a switch in a control circuit thereby indicating that a receiving sheet, or transfer and receiving sheet has been correctly inserted. With this in view the switch contacts of two switches provided at two sheet paths may be connected in series to energize a common control circuit including, for example, an optical indicating device, it being understood, however, that an acoustical indicating device may also be provided.

According to a special feature of the invention each switch energizes an indicating device, particularly an optical indicating device indicating whether the associated receiving and/or transfer sheet has been introduced correctly.

According to yet another aspect of the invention the control circuit is closable by one or, if two copy sheets (e.g. an image receiving and an image-transfer sheet) are used, by two switches for energizing means for transferring the image, e.g. a radiation source such as an exposure-light source, or a heat radiator and a charging station for xerography or the like.

Further, the invention is characterized by feed means including at least one magazine and, therebelow, an inserting table for the master, whereby the master and a copy receiving sheet are moved to a radiation source and beyond the radiation source the master is returned to the inlet while the copy sheet is passed through another treatment station and on to an outlet opening disposed above or below the feed means.

If two copy sheets are used, the original is disposed between them and, according to the invention, two copy receiving sheets (e.g. the positive and the negative) are passed out of the apparatus below the inlet.

Further advantages and features will become evident from the following description of one embodiment, given by way of example, and the appended drawing.

In the drawing:

FIG. 1 is a lateral sectional view of an apparatus according to the invention;

FIG. 2 is a schematic circuit according to one embodiment; and

FIG. 3 is a schematic circuit according to another embodiment.

In the drawings only the essential features of the invention are diagrammatically illustrated. The system of FIG. 1 employs a copying method using two copy sheets, one image transfer or so-called "negative" sheet, and an image-receiving or "positive" sheet which are, for example, treated in accordance with a liquid-diffusion reproduction process after the negative sheet and the original or master have been exposed in juxtaposed relationship. It should be understood that the invention also applicable to other copying methods, particularly dry-copying methods, for example xerographic methods in which a transfer sheet and a receiving sheet are also used. In such apparatus electrostatic-charging stations are arranged ahead of an exposure station, while the developing station is provided with a powder applying device beyond which an annealing or fusing device is arranged. Further, the invention can be applied to dry-diffusion methods in which, for example, a receiving sheet is used which, after exposure, is treated together with a chemical-carrier sheet brought into contact with the receiving sheet at a developing station. Moreover, the inventive features are suitable for the method of making copies with only one receiving sheet; in this case only one magazine is provided in addition to the support or feed table for the original. The preferred embodiment, however, is an apparatus using two copy sheets together with an original. In this surprisingly advantageous arrangement especially significant improvements in handling the copying material results. Here the expenditure which has been necessary in conventional apparatuses using ribbon or band material and operable by introducing the original and actuating a lever, is greatly reduced in a surprising manner. The advantage as compared with apparatus into which at least two copy sheets are introduced manually is evident.

The illustrated device comprises a housing **1** having an inlet and outlet opening **2** arranged on one side. A table **3** forms a supply magazine containing a stack **4** of image-receiving or "positive" sheets, while a feed and support table **5** for introducing the original or master sheet, and a magazine **7** for a stack **8** of photosensitive transfer sheets from light are arranged one below the other and extend horizontally into the inlet and outlet opening. Each of the tables or magazines merges into guide elements **9, 10, 11** defining guide paths into the apparatus and, if occasion arises, together with another guide element **12**. The guide elements **9** and **11** are provided in accordance with the size of the copy sheets, with inclined wall **13, 14** which are engaged by the leading edges of the sheets in a staggered manner whereby the introduction or movement of the uppermost sheet along the guide elements **9, 10, 11** leading into the apparatus is greatly facilitated.

Each one of the guide elements **9, 10, 11** is provided with a respective opening **15, 16, 17** at the commencement of their guide path. Abutments **18, 19, 20** extend through these openings, the abutments **18** and **20** being pivotal actuating levers for switches **21, 22**, while the abutment **19**, for example, is formed by a ledge, rake, or the like, retractable out of the opening **16**.

An exposure device or station generally designated **23** is arranged within the housing and comprises a radiation or light source **24** and a reflector **25** both arranged within a rotatable cylinder **26**, as well as a guide formed by one or a plurality of belts **27**. These belts hug the cylinder and are guided over rollers **28, 29, 30** rotatably supported by walls of the housing and rotate in the direction indicated by the arrows; at least the rollers **29** and **30** bear against the cylinder **26** and can be resiliently urged thereagainst. These last mentioned rollers may be arranged in such a way that the belt or belts **27** are slung around a circumferential sector of the cylinder which is greater than half of the circumference of the cylinder so that the latter is guided within the belt or belts **27**.

In addition a developing station or device **31** is arranged within the housing and is shown, for purposes of explanation, to be as a diffusion developing device. It comprises a trough-like lower guide path **32** and a correspondingly extending upper guide **33**. The intermediate space between these guides is filled with developing liquid **34** through which an intermediate guide path **35** extends partly through the developing liquid separates the introduced sheets at least as they are inserted into the liquid. At the outlet of the developing device, a pair of squeezing and transporting rollers is arranged in a known manner per se, one roller **36** being driven in the direction of arrow **38**, while the two rollers are resiliently urged together at their bearing by means not illustrated. The lower trough-like guide path **32** leads the copy sheets to the pair of rollers **36, 37** which grip and squeeze the sheets and transport them through the outlet **39** out of the apparatus.

A transport path **40** for the receiving sheets coming from the stack **4** is also provided; this path is defined by the guide elements **9** and **12** and extends to the intermediate guide **35** and the trough-like guide path **32**. Guide element **12** may be provided with an opening through which a drive roller **41** extends into the guide path **40** to ensure the transport of the passing receiving sheet. This roller is, for example, driven in the direction indicated by arrow **42**.

The guide element **10** extends tangentially to the roller **29** toward the gap between this roller and the cylinder **26**. In front of this gap, guide element **11** also terminates, whereby sheets fed over these guide elements enter this gap together, whereupon they are transported around the cylinder by means of the belt or belts **27** until they are released from the cylinder in the region of the roller **30**. At the contacting zone between the roller **30** and the cylinder **26**, a separating element **43** begins and extends in the direction of movement of the sheets, effecting a separation of the master from the transfer sheet and deflecting the original (arrow **44**) and returning it along the underside of guide element **9** in an upward direction, as viewed in the drawing, whereby the returning reach of the belt or belts **27** running adjacent this guide element serve as drive elements. The original is passed along this guide element below the table **3** and the wall **13**, in the direction indicated by the arrow **45**.

The separating element **43** causes the leading edge of the transfer sheet to move in the direction of arrow **46** between an upward extension **47** of the guide **33** and an extension **48** of the intermediate guide **35**.

It is to be noted that the lengths of paths from the abutment **15** through the guide path **40** to the developing device **31** and from the abutment **20** around the cylinder **26** to the developing device **31** are equal so that the transfer sheet and the receiving sheet register correctly with one another when fed simultaneously into the developing device **31** and are thus moved out of the outlet opening **39** together.

The separating element **43** may be formed in different manners. It may, for example, consist of a separating wedge spreading the advancing sheets. In this connection under- or over-pressure air means may be added. However, it is preferred to use a mechanical device, for example in the form of a pivotal separating element comprising two legs. In this arrangement it is necessary that, for example, the transfer sheet is somewhat advanced relative to the original, so that the leading edge of the

transfer sheet first engages a leg of the pivoting element and shifts the same, whereby the transfer sheet is lifted off of the somewhat rearwardly disposed original, which is guided by the other leg of the separating element into the path indicated by the arrow **44**. Such a pivotal separating element in the form of a bell-crank lever is known. In the illustrated apparatus its utilization is of especial advantage, because the forward position of the leading edge of the transfer sheet is not dependent on the attention or experience of the operating person, but is adjusted automatically by the relative position of the abutments **19** and **20** with respect to the cylinder **26**. In this connection it is merely necessary that the length of the transport path determined by the guide element **11** and extending between the abutment **20** and the cylinder **26** be shorter than the transport path determined by the guide element **10** extending between the abutment **19** and the cylinder **26**.

A support **48**, for example formed by a bar, constitutes mounting means which is substantially vertically movable in the housing perpendicularly to the sheets transport path defined by the guide elements **9** and **11**. For example, this support is shiftably guided in vertical direction by bearings **49**, **50**. The support includes an abutment disc **51** for a spring **52** arranged between the disc **51** and upper surface of the bearing **49**, this spring urging the support **48** upwardly. Transport means in form of rollers **53**, **54**, **55** are arranged on this support at the beginning of each transport path. These rollers are journalled on transverse arms **56**, **57**, **58**. The rollers have an elastic surface and are driven in clockwise direction, for example by a belt or an endless helical spring **59** guided over pulleys arranged laterally of the tables **3**, **5** and **7** within the housing. Thus the lowermost roller **55** is driven through an endless helical spring **60** by the drive shaft **61** of the geared drive unit **62**.

The switches **21**, **22** are also supported on the mounting means **48**. It is to be noted that the pivotal abutment formed by the actuating levers of the switches are movable together with the support **48** and are withdrawn through the openings **15**, **17**, the length of their movement path being dimensioned so that these abutments **18**, **20** when the support is in its lowermost position, still extend a trifle beyond the guide elements **9**, **11** so as to be tripped by the passing sheets.

In addition a transversely extending arm **63** is arranged on the support and carries the abutment **19**, dimensioned accordingly, which is retractable below the surface of the inserting table **5** by the support **48**.

The abutments **18**, **19**, **20** are each associated with a roll in such a way that the abutments in their rest positions tangentially approaching a circumferential portion of the associated roller facing the interior of the housing. The movable abutments **18** and **20** are deflectable away from the roller circumference by a transported sheet. The abutment **19** is either spaced from the circumference of the associated roller **54** or elastic whereby it too will be deflected from the circumference of the roller by the action of an advanced original.

The rollers **53** to **55** are disposed with respect to the path of movement of the support **48** such that they engage the guide elements **9**, **10**, **11** in the lower position of the support **48** at sections of the guide elements which, relative to the interior of the housing **1**, face outwardly. In the contact region the portions of the guide elements are preferably inclined.

The support **48** includes an abutment arm **64** for its actuation. Cooperating with this abutment arm **64** is a double-arm lever **65** tiltable in the counterclockwise direction and journalled on a horizontal pivot **66** of a bracket **67**. This bracket is disposed on the housing **1** laterally of the opening **2** and simultaneously serves to support a horizontal fulcrum **68** on which the actuating lever **69** is pivotally arranged.

This actuating lever is biased against a fixed abutment **71** of the housing by a spring **70** connected with bracket **67**. The actuating lever includes a projection **72** which, upon pivoting of the actuating lever **69** in the direction of the arrow **73**, engages the double-arm lever **65** rotating it in the counterclockwise direction whereby the abutment arm **64** and thus the support **48** are shifted downwardly, thereby lowering the abutments **18**, **19**, **20** on the one hand, and engaging the rollers **53**, **54**, **55** with the sheets. It will be noted that a lost motion is provided between the illustrated initial position of the actuating lever **69** and the engagement position in which the projection **72** engages the double armed lever **65**.

Associated with each of the stacks **4** and **8**, are advancing or pusher means **74**, **75** in form of rollers. These are connected, for example by a yoke **76**. This U-shaped yoke has a vertically extending web pivotally connected by an articulation **77** with the lower arm **78** of the actuating lever **69**. The rollers **74**, **75** are rotatable in one direction only, in the clockwise sense, at the substantially horizontally extending legs **79**, **80**. The weight of the rollers and yoke causes the rollers **74**, **75** to be urged downwardly, although additional weights **81**, **82** may be arranged adjacent the roller bearings. The rollers **74**, **75** thus bear down against the uppermost sheet of the stack **4** or **8**. In this connection it should be noted that the yoke **76** is formed at its web **83** out of two parts **79**, **80**, both parts being interfitting and telescopingly shiftable with respect to one another so that their rollers can move vertically to bear upon the stacks of sheets. The purpose of this arrangement is to allow each roller **74**, **75** to engage the uppermost sheet of the stack by its own weight independently of the height of the respective stack **4** or **8**. In this it should be noted that only one telescopingly shiftable connection needs be provided, because the rigidly connected roller can engage the uppermost sheet of its associated stack due to the automatic pivoting of the yoke **76** by a one-sided overweight.

If the actuating lever **69** is moved against the action of the spring **70** in the direction of arrow **73** the rollers **74**, **75**, which are either non-rotatable, or journalled on one way couplings allowing rotation on the return stroke only, i.e. in a clockwise direction, will push the uppermost sheet of each stack onto the guide elements **9**, **11** and against the abutments **18** and **20**. The clearance or lost motion between the projection **72** and the pivoting lever **65** is dimensioned in such a way that the latter is only acted upon after the sheets have arrived at the abutments **18** and **20**. Of course prior to this an original has been moved normally into engagement with the abutment **19**. By the actuation of the pivoting lever **65**, the support **48** is urged downwardly, whereby the abutments are moved out of the introduction paths, and the rollers **53**, **54**, **55** are brought into engagement with the sheets and the original, respectively contacting the abutments, so that these sheets are moved simultaneously into the apparatus. The actuating lever **69** is held depressed until the sheets are engaged by the other transport means, i.e. the original and a transfer sheet by the exposure device, and the receiving sheets, for example by a roller **84** extending into the introduction path **40** and driven in a clockwise direction.

The switches **21**, **22** are according to FIG. 1 each connected with a control light **85**, **86** arranged within the housing behind a window, not shown, to indicate, in dependence, on the passage of a sheet that the apparatus is correctly charged with the sheets. Such a switching circuit is shown in FIG. 3. In this wiring diagram, the control lights are designated with the same reference numerals as used in FIG. 1. In FIG. 3, an electrical current source **87**, associated with fuses and unillustrated switches, is connected in series with switch **21** which energizes the control light **85**. The control light **86** is connected in series with the switch **22** via a resistance **88**. The resistance **88** prevents, upon switching-on of the switch **22** exclusively, application to the exposure

means 89 of sufficient energy to render it operative, for example, by the connecting device for the radiation source 24, or the radiation source itself. This source 89 is connected with the current source 87 only when both switches 21, 22 are closed. If only one switch is closed the radiation source (i.e. lamp) respectively, is not switched-on and absence of lighting of the lights 85, 86 indicates that the introduction of one sheet is either faulty, or did not take place.

FIG. 2 shows a simplified arrangement with an electrical energy source 87 and a control circuit in which the two switches 21, 22 are connected in series. In this embodiment only one control light 90 is provided and upon proper functioning of the apparatus, will light and assure the operator that the copy sheets have been introduced properly. This control light 90 may be connected via a resistance with a member 89 corresponding to the means 89 of FIG. 3 or may be connected in parallel with the control light, said means 89 effecting the energization of the radiation source 24.

Moreover it will be seen that from the unit 62 comprising the drive motor and a gear transmission, or from the driven shaft 61, a drive belt 91, formed by an endless helical spring, is connected with the transporting and squeezing roller 36, and another drive belt 92, also formed by an endless helical spring, is connected with the transport roller 84 and with the roller 28 of the exposure device.

What is claimed:

1. In a copying apparatus, in combination, a housing provided with an inlet; a processing station in said housing spaced from said inlet for reproducing copy from a master sheet on a copy sheet; guide means in said housing extending from said inlet to said processing station and forming a transport path for at least one of said sheets thereto; transport means in said housing adjacent said guide means and including a pair of spaced apart rollers respectively engageable with said sheets, mounting means for said rollers normally holding them out of the paths of said sheets, respective abutments carried by said mounting means and normally extending into the paths of said sheets for intercepting them, and drive means for rotating said rollers; feed means at said inlet including at least one magazine for one of said sheets, pusher means for shifting at least one of said sheets from said magazine into contact with the respective abutment while the other of said sheets is brought into engagement with its respective abutment, and actuating means for operating said pusher means; and connecting means coupling said feed means with said mounting means for displacing the latter upon said sheets contacting said abutments for withdrawing said abutments from the path of said sheets and bringing said rollers into engagement with said sheets for shifting them along said guide means.

2. The combination defined in claim 1 wherein said pusher means includes a member engageable with the uppermost sheet of said magazine for advancing it against a respective abutment, said actuating means including a manually displaceable lever swingable about a substantially horizontal pivotal axis and articulated to said member for displacing same, said mounting means being common to all of said rollers and said abutments, said connecting means including a double-arm lever fulcrumed for rotation about a substantially horizontal axis between said manually displaceable lever and said mounting means while being engageable by said manually displaceable lever for shifting said mounting means and bringing said rollers into engagement with sheets positioned adjacent said guide means and concurrently withdrawing said abutments.

3. The combination defined in claim 2 wherein said manually displaceable lever is provided with a projection and said double-arm lever has an arm in the path of said projection forming a lost-motion connection between said levers whereby said mounting means is displaced from its normal position into a position wherein said rollers engage said sheets only subsequent to the operation of said shifting means to advance the uppermost sheet from said magazine into contact with the respective abutment.

4. The combination defined in claim 3, further comprising drive means for rotating said rollers continuously in a first operative position of said mounting means wherein said rollers are held out of the paths of said sheets and a second operative position of said mounting means wherein said rollers engage said sheets and advance them along said paths.

5. The combination defined in claim 4 wherein the abutment assigned to the sheets from said magazine is shiftable by sheets from said magazine displaced by the respective roller along the respective guide path, further comprising switch means controlled by said abutment assigned to the sheets of said magazine, and circuit means controlled by said switch means for indicating the failure of a sheet from said magazine to be passed along the respective path by the respective roller.

6. The combination defined in claim 5 wherein a further magazine is provided with vertical spacing from the first-named magazine for retaining further sheets, said feed means including a further pusher means coupled with the first-mentioned pusher means whereby actuation of said manually displaceable lever simultaneously advance the sheets from both magazines through said inlet, said transport means including a further roller journaled on said mounting means and rotatable together with the rollers associated with the first-mentioned sheets and a further abutment on said mounting means extending into the path of said further sheets in an operative position of said mounting means wherein said rollers are out of the paths of the respective sheets and withdrawable from the path of said further sheet upon displacement of said mounting means into an operative position wherein said rollers engage said sheets.

7. The combination defined in claim 6 wherein the abutments assigned to the sheets from said magazines are each provided with a respective switch, said processing station comprising an electrically operated device, the combination further comprising circuit means including said switches and said device whereby failure of a sheet from one of said magazines to operate a respective switch prevents actuation of said device whereas joint actuation of said switches operates the device.

References Cited by the Examiner

UNITED STATES PATENTS

2,220,526	11/40	Kluitmann	95—77.5
2,371,925	3/45	Schade et al.	95—77.5
3,091,169	5/63	Taini et al.	95—77.5

EVON C. BLUNK, *Primary Examiner.*