April 7, 1936. M. P. FAVRE-BULLE 2,036,917

ELECTRIC TIMEPIECE

Filed March 8, 1935

Fig. 1

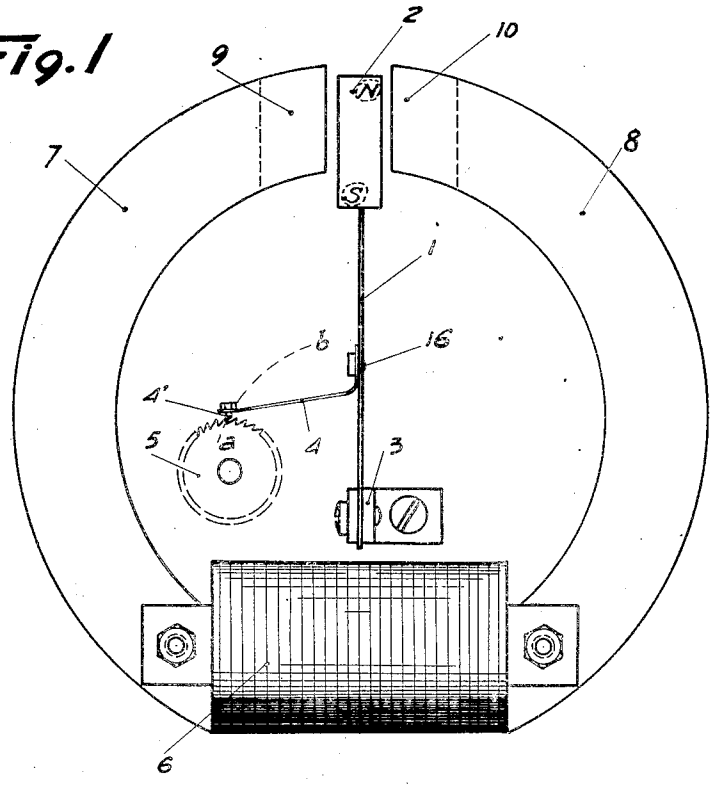


Fig. 2

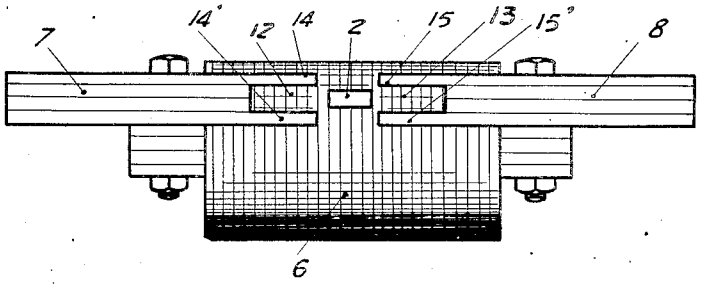


M. P. Favre-Bulle
INVENTOR

By: Glascock Downing & Seebold
Attys.

Patented Apr. 7, 1936

2,036,917

# UNITED STATES PATENT OFFICE

2,036,917

## ELECTRIC TIMEPIECE

Maurice Philippe Favre-Bulle, Boulogne sur Seine, France

Application March 8, 1935, Serial No. 10,078
In France March 6, 1934

3 Claims. (Cl. 58—26)

My present invention has for its object improvements to timepieces actuated by an oscillating device operated by an alternating current.

This device is constituted by a electro-magnet the armature of which consists in a magnetic mass, preferably a magnet, mounted at the free end of a spring blade; this armature may oscillate with reference to the poles of the electro-magnet, synchronously with an alternating current energizing the same; said oscillations are transmitted by suitable means to any indicating device such as hands or the like.

Apparatuses of that kind are generally fed by the alternating current of a distributing network; the frequency of such currents remains substantially constant, but their strength varies widely and very irregularly; this results in the oscillations of the armature taking variable amplitudes and consequently in the timepiece becoming fast or slow since the variations of the strength of currents result in the oscillation of the armature taking variable amplitudes; thus in the devices in which the angular displacement of the hands corresponding to one oscillation depends on the amplitude of the oscillation, it is obvious that, if the amplitude becomes say greater than its correct value, the frequency remaining the same, the displacement of the hand during a given time will be greater than its correct value and thus the timepiece will be fast. This is more particularly the case when the reciprocating motion of the armature is transmitted to the hand by intermediary of a ratchet wheel operated by a pawl actuated by the armature.

It has been tried to avoid said drawback by providing stops limiting the path of the oscillating armature; but, if said stops are of not flexible material, an annoying noise shall be produced each time when the armature shall knock thereon; if the stops are made of an elastic material, such as india rubber, the length of the path shall not be accurately limited.

According to the invention, the amplitudes of the oscillating armature are automatically adjusted, by an electro-magnetic braking; the armature penetrating at either end of its path into a recess provided in the end of the electro-magnet projection; the strain exerted by the magnetic field on the armature in said position being opposite to that exerted when the armature is still out of said recess as it will be explained further.

A time-piece according to the invention will be now disclosed by way of example, with reference to the appended drawing wherein:

Fig. 1 is a side view of the whole of the apparatus.

Fig. 2 is a plan view of the same.

In said figures: 1 is a spring blade fastened by a bracket 3 to the frame (not shown) of the timepiece; a magnetic mass, preferably a magnet 2, is secured at the free end of spring 1, the same spring 1 supports a pawl 4' in engagement with a ratchet wheel 5 which drives by any suitable means (not shown) the indicating device such as clock hands (not shown).

The electro-magnet comprises a coil 6 wound round a core whereon are fixed ring shaped pole projections 7 and 8, preferably laminated, and so disposed that their ends 9, 10 are in front of each other and separated by a narrow air gap in which may move the magnet 2.

As stated above the ends of said pole projections are provided with recesses 12 and 13 into which the magnet 2 may penetrate at either end of its path. When the pole projections are laminated, viz. made with iron plates applied on each other, the recess may be formed, as illustrated in Fig. 2, by making the central plates shorter than the outer ones 14, 14' and 15, 15' which then project on each side.

The armature 2 oscillates between the poles 9, 10 at the frequence of the current supplied by the net work, about 25 periods per second or more, in said conditions it is obvious that the pawl and the ratchet wheel ought to be specially designed in order to avoid a too prompt wear. According to the invention the pawl is made of a hard stone such as ruby or sapphire.

Said pawl 4' is fixed, say by means of gum-lac, in a little metallic cap disposed at the end of a blade spring 4 secured on the blade spring 1. Said form of execution is of great importance for the good working of the apparatus.

The motion of the spring 1 is substantially similar to that of a pendulum, so when said spring leaves its extreme right position for going towards the left, its speed increases until the spring is substantially in its median position, (shown in the Figure 1) and then decreases until said spring has reached its left extreme position where said speed is zero. Now while this speed is increasing the ratchet wheel is pushed by the pawl, but when said speed begins to decrease, the wheel because of its inertia will have a tendency to rotate always at the angular speed corresponding to the speed maxima of the pawl, and thus to slide under said pawl and go beyond it. It is obvious that this would result in the timepiece being fast. Of course this tendency of the wheel to outstrip the

pawl is opposed by the friction between said pawl and said wheel. Now it may be seen in Fig. 1 that if the wheel 5 was removed, the path of the pawl would be substantially an arc *ab* of a circumference the center of which should be the fixation point of the blade spring 1 on the bracket 3. In said conditions when the blade spring moves from right to left the pawl 4' bears more and more strongly on the wheel and so the friction between said two pieces increases preventing the wheel to slide under the pawl. Contrarily when the spring 1 returns from left to right, the pressure of the pawls on the wheel decreases progressively allowing said pawl to slide easily on the wheel without driving this latter, which may be moreover kept in place by any known or suitable braking device not shown in the figure.

The above disclosed apparatus is characterized by the following advantages.

1. The oscillating armature is simultaneously attracted by one pole piece end, say 9, and repelled by the other 10.

2. The magnetic circuit is almost closed owing to the poles 9 and 10 being near each other and to the presence of the magnetic armature 2 in the air gap. This particularly rational disposition presents the greatest advantages with reference to the efficiency and the secureness of the operations, the apparatus being prevented from heating even when fed by a current at high voltage.

But the principal advantage is the auto regulation of the amplitude of the oscillating armature, which is a consequence of the peculiar shape of poles 9 and 10 as illustrated in Fig. 2. As explained above they are provided with recesses 12 and 13 wide enough to allow armature 2 to penetrate freely therein; with such a disposition an auto-regulating braking is produced. This phenomenon may be explained in the following way.

It may be easily ascertained that, when the armature is entirely in the air gap, the magnetic lines of force issue only from ends 14, 14', 15, 15' and that there is no magnetic field inside the recesses 12 and 13; so, when during its oscillations the armature 2 begins to penetrate in one of the recesses, the lines of force, having a tendency to pass through the permeable armature, shall be altered in their form and lengthened. As it is well known, they act on the armatures as if they were elastic strings and thus, their lengthening results in a strain pulling back said armature, and consequently slackening its motion. Said strain and the resulting braking, is the greater as the magnetic field is itself the stronger; in other terms the braking effect increases when the oscillations amplitude has itself a tendency to increase.

The so obtained regulation is thus automatic, and that is very important for obtaining a regular driving of the ratchet wheel.

What I claim is:

1. An electrically operated timepiece, comprising an electro-magnet the coil of which is fed by an alternating current; an armature; flexible means for supporting said armature in such a way that it might oscillate with reference to the poles of the electro-magnet; each end of the poles of the electro-magnet having a recess therein large enough for allowing the armature to penetrate freely inside it when it reaches either end of its path; a ratchet wheel, a pawl engaged with said wheel; means for connecting said pawl to the support of the armature.

2. An electrically operated timepiece comprising an electro-magnet the coil of which is fed by an alternating current, said electro-magnet being provided with laminated ring shaped pole projections; an armature constituted by a magnet; a blade spring supporting said magnet in such a way that it might oscillate between the ends of the pole projections of said electro-magnet; each of the ends of said pole projections having a slot therein large enough for allowing said magnet forming the armature to penetrate freely inside said slot when it reaches either end of its path; a ratchet wheel, a pawl engaged with said wheel; means for connecting said pawl to the spring supporting the armature.

3. An electrically operated timepiece comprising an electro-magnet the coil of which is fed by an alternating current, said electro-magnet being provided with laminated ring shaped pole projections; an armature constituted by a magnet; a blade spring supporting said magnet in such a way that it might oscillate between the ends of the pole projections of said electro-magnet; said ends having slots therein large enough for allowing said magnet forming the armature to penetrate freely inside them when it reaches either end of its path; a ratchet wheel provided with fine teeth; a blade spring mounted on the first mentioned blade spring supporting the armature and substantially perpendicular thereto; a pawl of hard stone engaging the ratchet wheel; means for securing said pawl on the free end of the secondly mentioned blade spring.

MAURICE PHILIPPE FAVRE-BULLE.