US 20050131419A1

(19) **United States**

(12) **Patent Application Publication** (10) **Pub. No.: US 2005/0131419 A1**

McCord et al. (43) **Pub. Date: Jun. 16, 2005**

(54) **PIVOTING IMPLANT HOLDER**

(76) Inventors: **David McCord**, Nashville, TN (US); **Richard C. Techiera**, North Dartmouth, MA (US); **Sean P. Selover**, Tiverton, RI (US)

Correspondence Address:
NUTTER MCCLENNEN & FISH LLP
WORLD TRADE CENTER WEST
155 SEAPORT BOULEVARD
BOSTON, MA 02210-2604 (US)

(21) Appl. No.: **10/737,166**

(22) Filed: **Dec. 16, 2003**

Publication Classification

(51) **Int. Cl.**[7] **A61B 17/56**

(52) **U.S. Cl.** **606/99**

(57) **ABSTRACT**

A medical inserter tool is provided for introducing medical implants into a surgical site, preferably using minimally invasive techniques. The inserter tool can have a variety of configurations, but in general, the inserter tool should be effective to engage and manipulate the implant into two or more positions. In an exemplary embodiment, the tool includes an elongate shaft having proximal and distal ends and defining a longitudinal axis extending therebetween, and a pivoting element that is coupled to the distal end of the shaft and that is adapted to engage a spinal implant. In use, the pivoting element is movable between first and second positions to allow an implant to be introduced through a percutaneous access device in a lengthwise orientation, and to be manipulated subcutaneously to be positioned in a desired orientation.

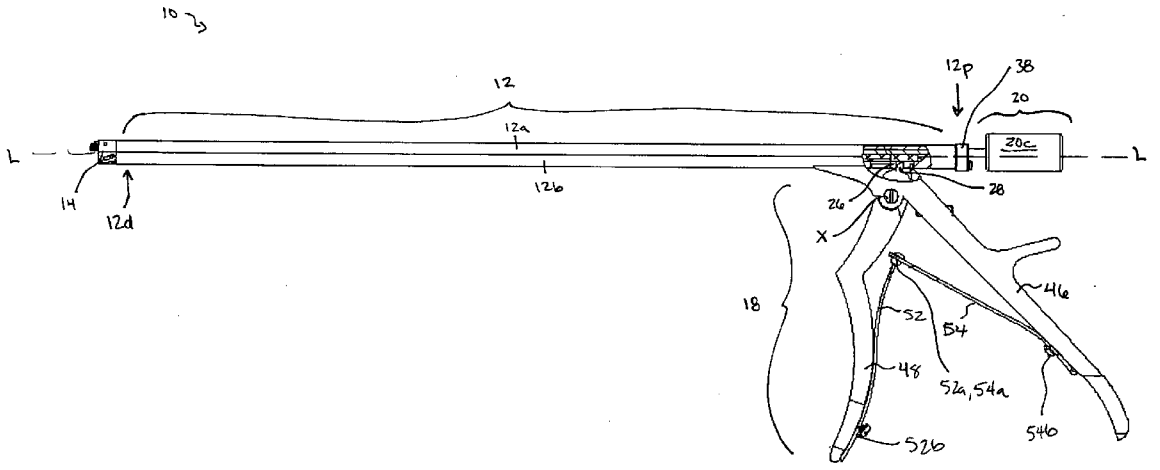

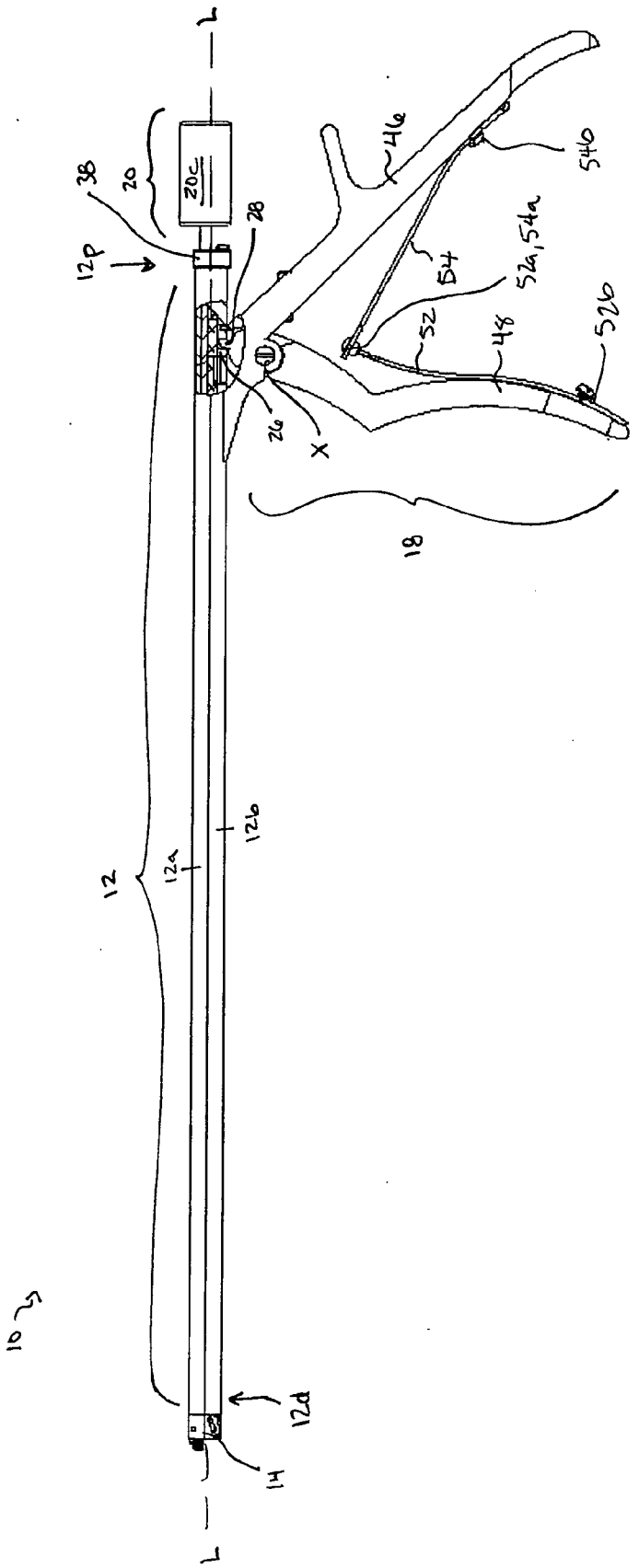
L
38
20
20c
28
12p
46a
54b
64
52
54a, 54a
48
52b
26
X
18
12
12a
12b
10
12d
14
L

Fig. 1A

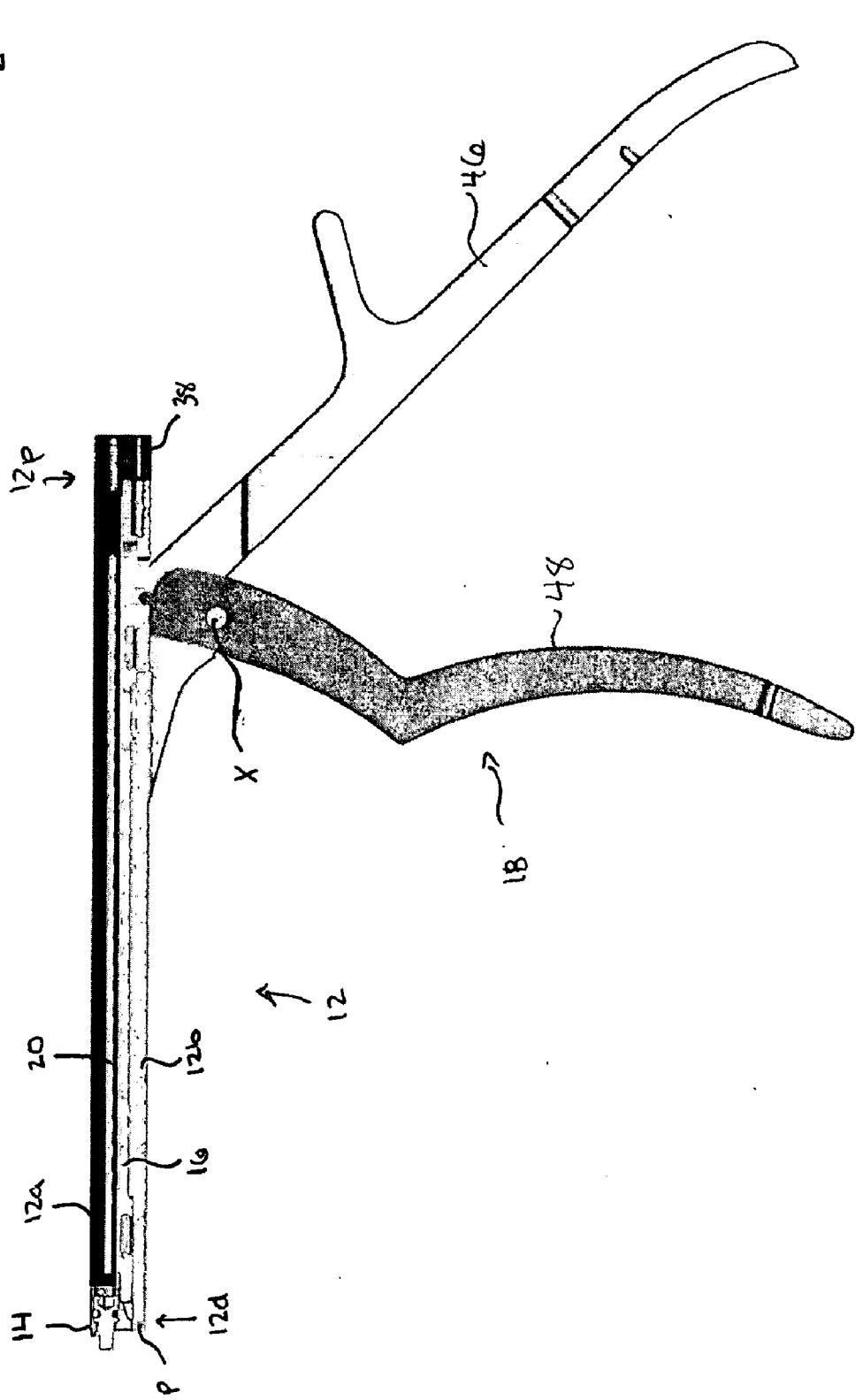

Fig. 1B

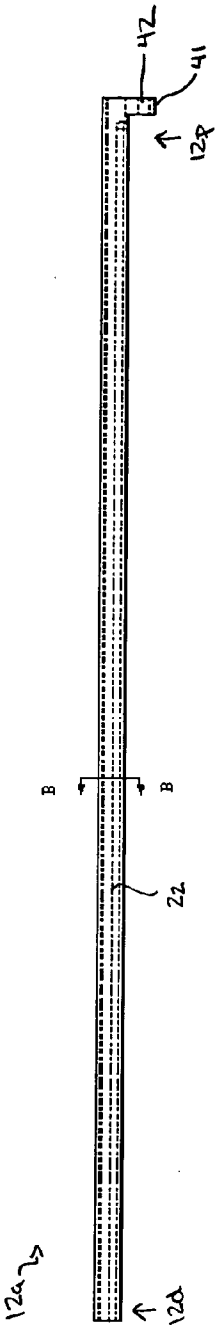

Fig. 2A

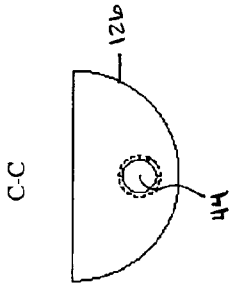

Fig. 3B

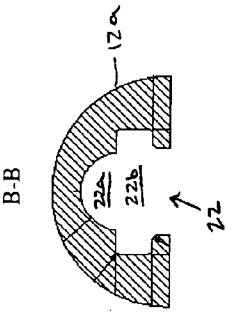

Fig. 2B

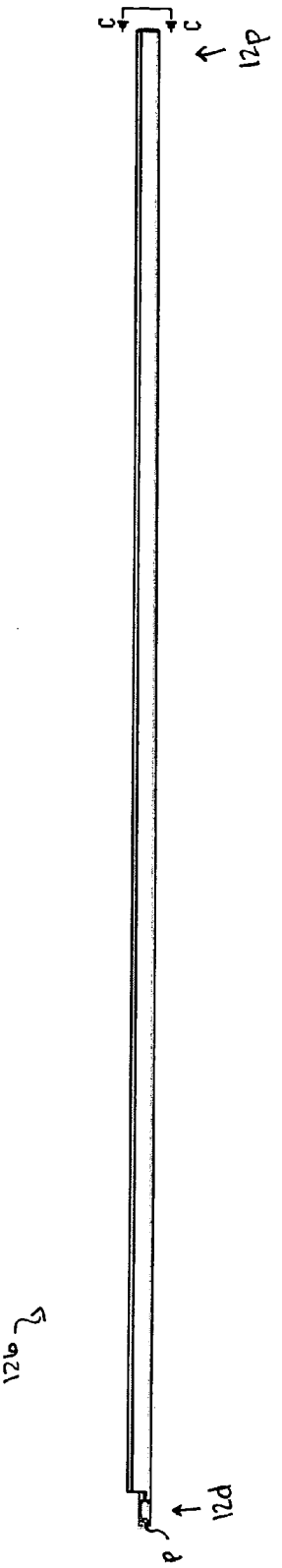

Fig. 3A

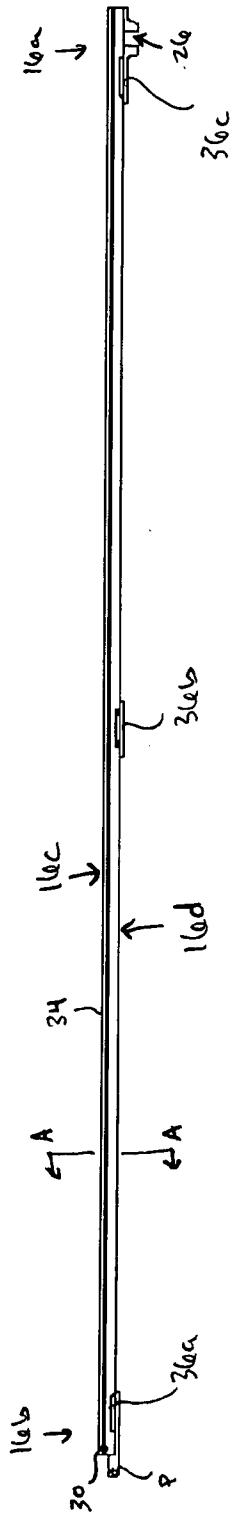

Fig. 4A

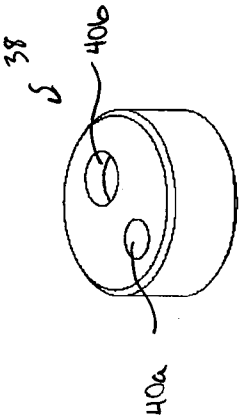

Fig. 5

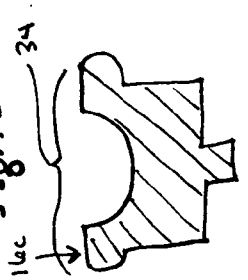

Fig. 4B

Fig. 6A

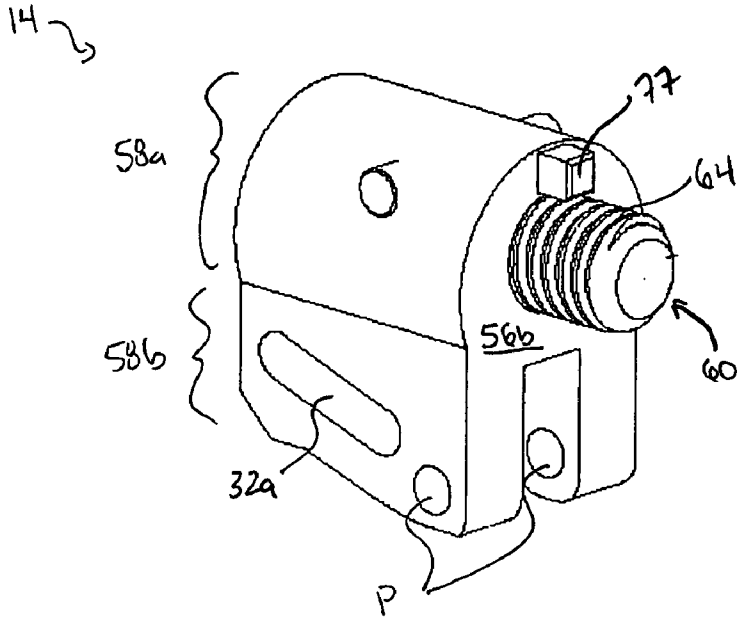

Fig. 6B

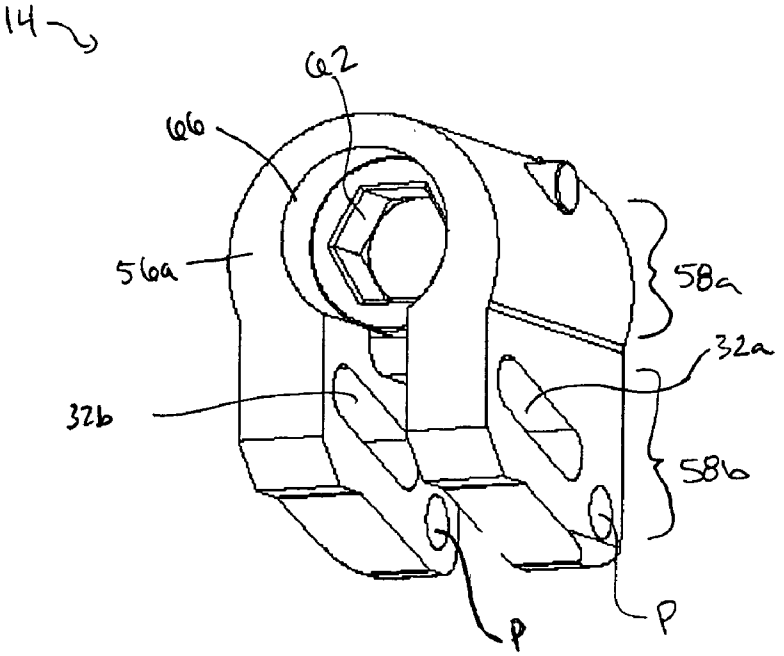

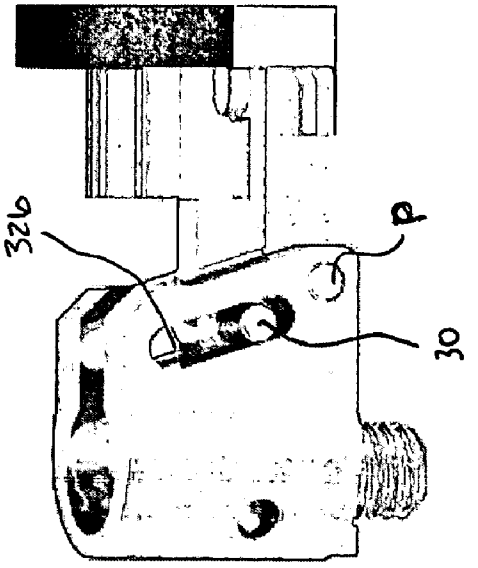

Fig. 7B

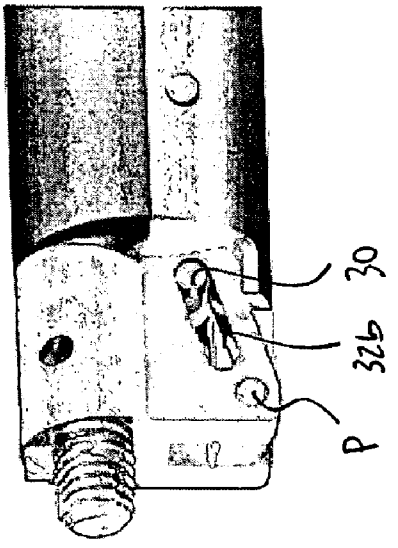

Fig. 7A

Fig. 8

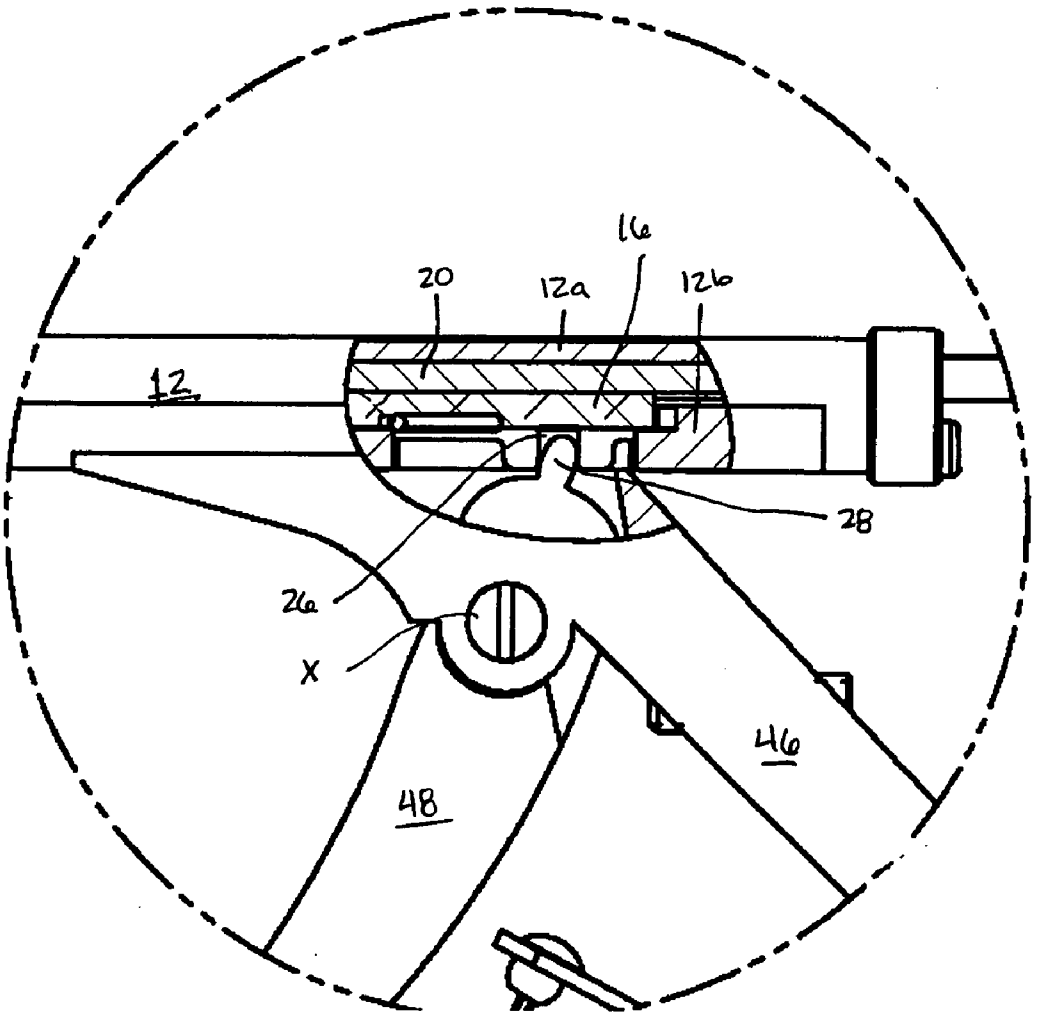

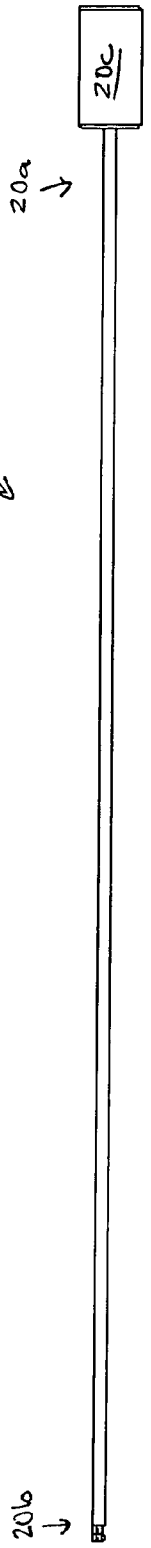

Fig. 9A

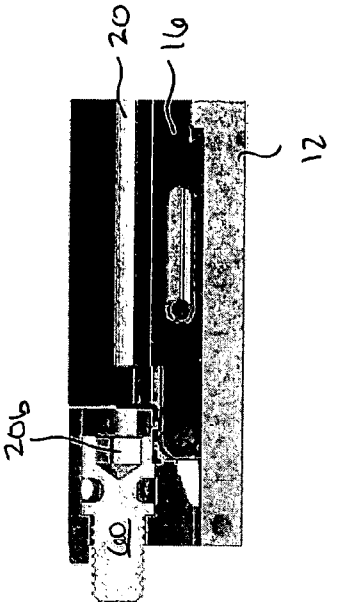

Fig. 9C

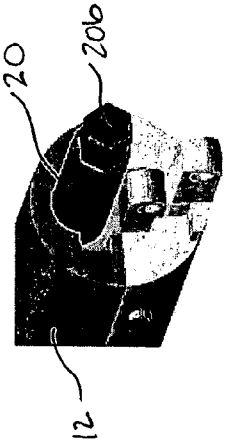

Fig. 9B

Fig. 10A

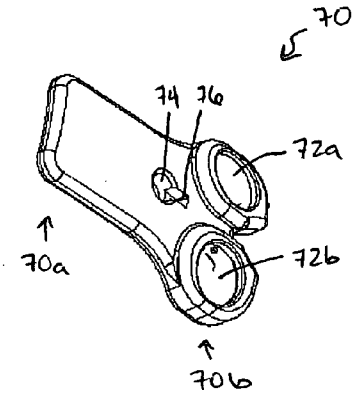

Fig. 10B

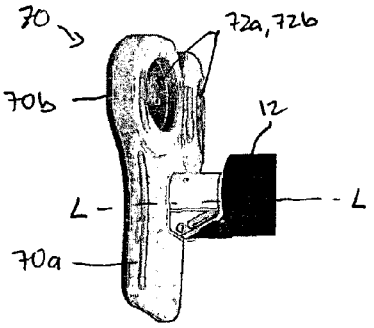

Fig. 10C

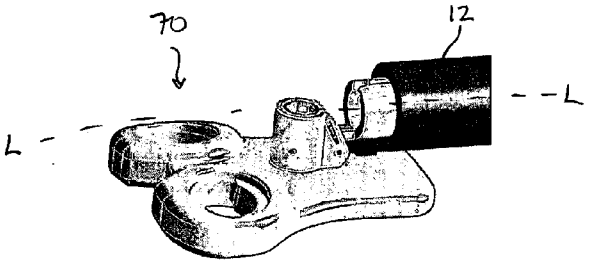

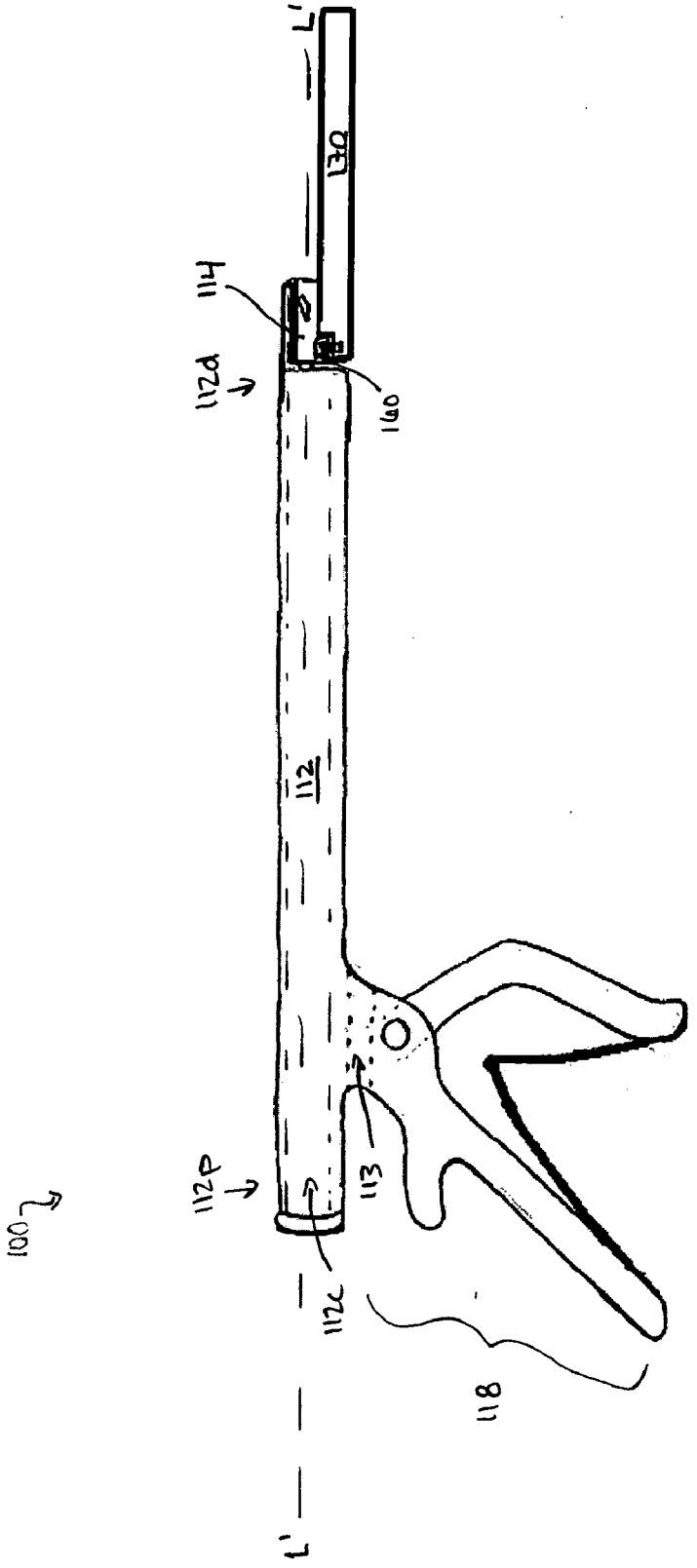

Fig. 11

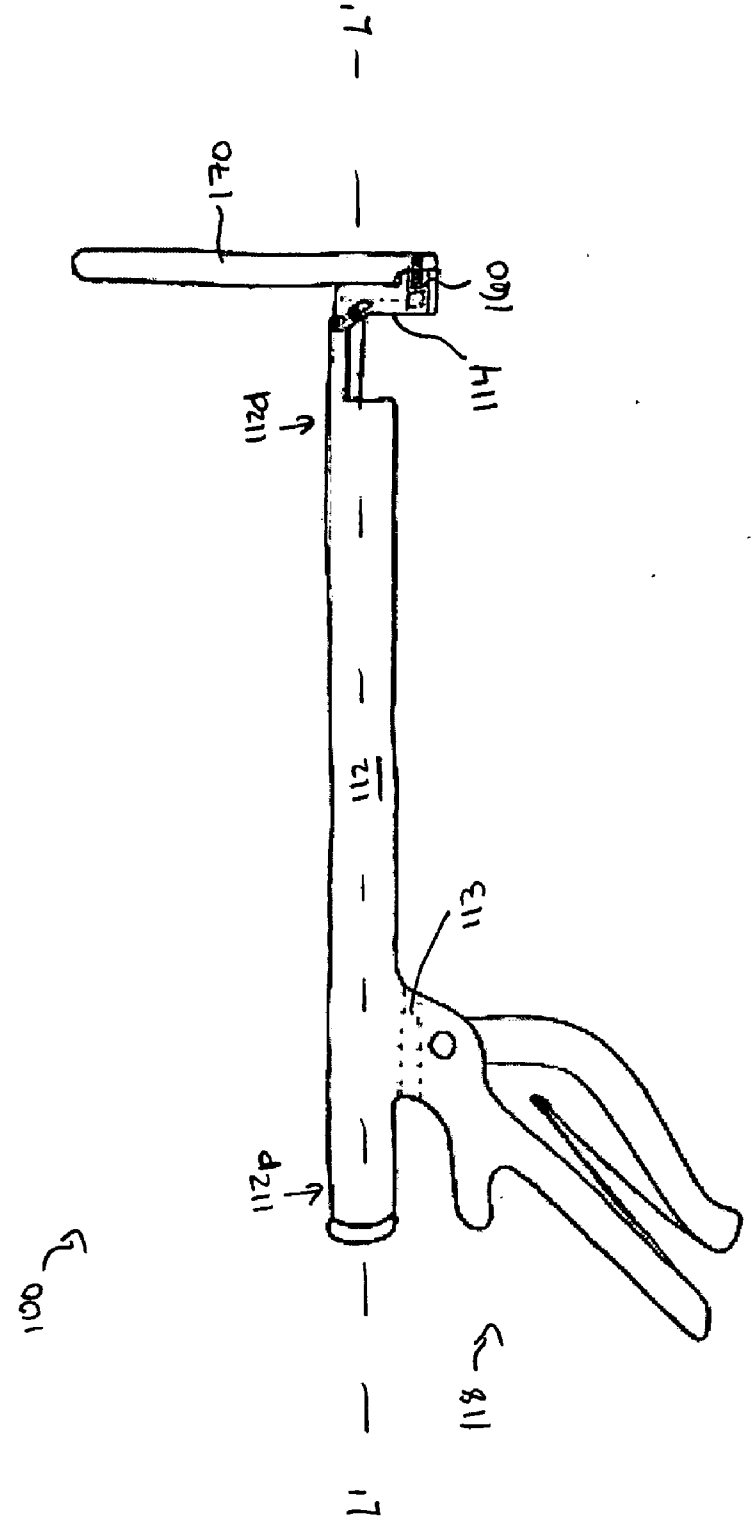

Fig. 12

Fig. 13A

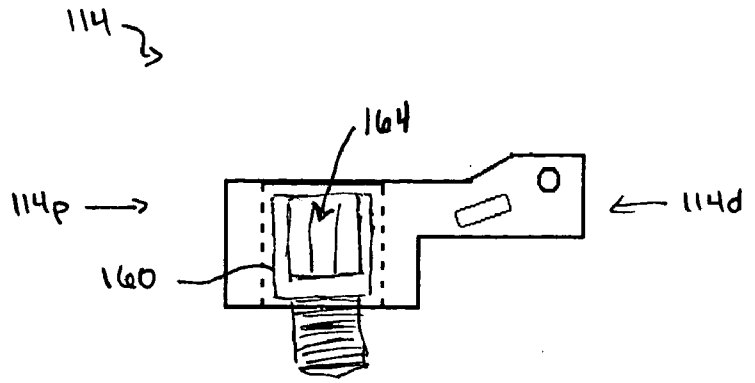

Fig. 13B

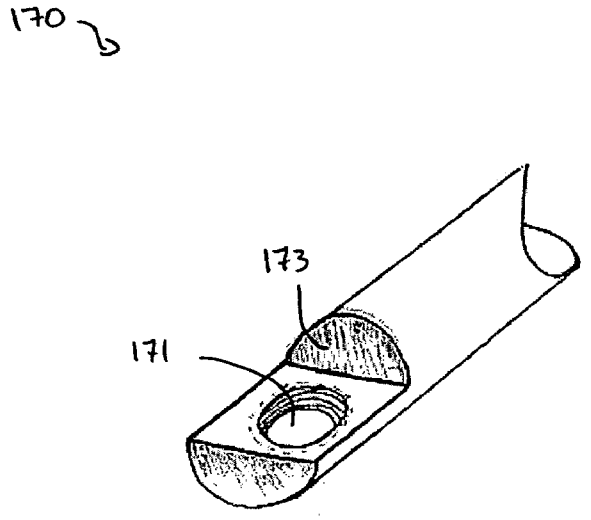

Fig. 13C

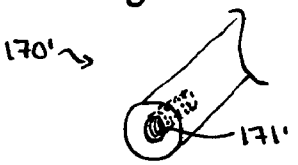

Fig. 14

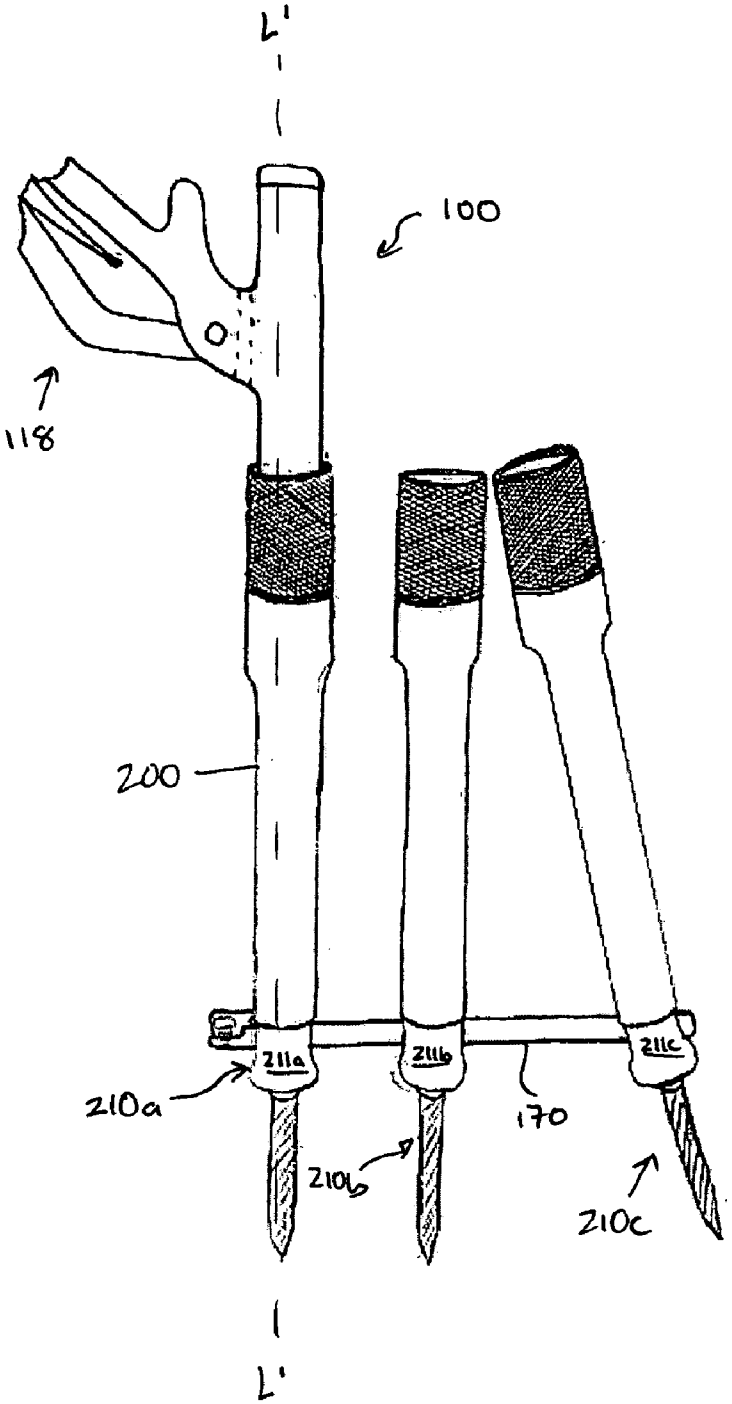

PIVOTING IMPLANT HOLDER

FIELD OF THE INVENTION

[0001] This application relates to tools for use in spinal surgery, and in particular to methods and devices for introducing implants into a surgical site using minimally invasive techniques.

BACKGROUND OF THE INVENTION

[0002] Traditional surgical procedures for pathologies located deep within the body can cause significant trauma to intervening tissues. These open procedures often require a long incision, extensive muscle stripping, prolonged retraction of tissues, denervation and devascularization of tissue. Accordingly, minimally invasive surgery provides several advantages over conventional open-incision surgery because it involves creating small incisions or portals in the patient to access percutaneous bone, organs, and soft tissues. Small incisions are less traumatic to the patient and they provide for accelerated recovery and convalescence. Minimally invasive surgery can also be less time consuming and less expensive than conventional surgery.

[0003] Minimally invasive surgical approaches are particularly desirable in spinal surgery because of the need for access to locations deep within the body and the risk of damage to vital intervening tissues. Several new spinal surgery techniques have been developed that utilize percutaneous access devices, such as cannulas and trocars, to introduce surgical instruments and/or implants into a surgical site. These recent developments have yielded a significant improvement in reducing recovery time and post-operative pain because they require minimal muscle dissection and they can often be performed under local anesthesia.

[0004] The use of percutaneous access device in spinal surgery can, however, present difficulty in introducing implants and/or instruments into a surgical site since percutaneous access devices limit the surgeons ability to control movement of instruments and devices passing therethrough. Often the percutaneous access devices have an inner diameter that is smaller than the length of the implant and/or instrument being received therein. Most percutaneous access devices also only permit direct, in-line access to a surgical site, thus making it more difficult to manipulate and/or control the instrument and/or implant.

[0005] Accordingly, there remains a need for methods and devices for introducing implants into a surgical site using minimally invasive techniques.

SUMMARY OF THE INVENTION

[0006] The present invention provides a medical implant inserter tool that generally includes an elongate shaft having proximal and distal ends defining a longitudinal axis extending therebetween, and a pivoting element coupled to the distal end of the elongate shaft and adapted to releasably engage a medical implant. The pivoting element is movable between a first position, in which the pivoting element is longitudinally aligned with the shaft, and a second position, in which the pivoting element is substantially transverse to the shaft. This allows elongate implants to be introduced through a percutaneous access device in a lengthwise fashion, and then to be rotated to its implanted orientation and positioned as desired. The tool also includes an actuator mechanism that is coupled to the proximal end of the elongate shaft and that is effective to move the pivoting element between the first and second positions.

[0007] In one embodiment, the actuator mechanism can be a trigger formed on the proximal end of the elongate shaft, and a pusher shaft slidably disposed with respect to the elongate shaft and extending between the trigger and the pivoting element such that movement of the trigger is effective to move the pusher shaft to effect pivoting movement of the pivoting element between the first and second positions. In an exemplary embodiment, the pivoting element is biased to the first position, preferably by a biasing element that is coupled to the trigger. As a result, actuation of the trigger is effective to move the pivoting element into the second position.

[0008] In another embodiment of the present invention, the pivoting element can include a threaded engagement mechanism, such as a set screw, that is adapted to releasably engage an implant. A driver shaft can be coupled to the elongate shaft and it can include a distal end that is effective to rotate the threaded engagement mechanism in the pivoting element. In an exemplary embodiment, the driver shaft is separated from the threaded engagement mechanism when the pivoting element is in the second position, and the driver shaft is coupled to and effective to rotate the threaded engagement mechanism when the pivoting element is in the first position. The threaded engagement mechanism can optionally include a socket formed in a proximal end thereof for receiving the distal end of the driver shaft. The socket of the pivoting element and the distal end of the driver tool preferably have complementary shapes.

[0009] The present invention also provides a spinal implant kit that includes a spinal bone plate, and an implant holder. The implant holder preferably has an elongate shaft with a distal end that is adapted to releasably engage the spinal bone plate and to move the plate between a first position, in which the plate is longitudinally aligned with the implant holder, and a second position, in which the plate extends at an angle with respect to a longitudinal axis of the implant holder. A cam mechanism is preferably formed on the implant holder for moving the plate between the first and second positions. In an exemplary embodiment, a pivoting element is pivotally coupled to a distal end of the elongate shaft and it is movable between the first and second positions.

[0010] In use, the pivoting element can be adapted to releasably engage a mid-portion of the plate, and more preferably the plate can include a threaded bore formed therein for receiving a threaded engagement mechanism that is rotatably disposed in the pivoting element. The pivoting element can also optionally include an anti-rotation mechanism that is adapted to engage and prevent rotation of the plate when the plate is mated to the pivoting element. The anti-rotation mechanism can be, for example, a protrusion that extends distally from a distal end of the pivoting element when the pivoting element is in the first position, and that is adapted to be disposed within a complementary detent formed in the plate.

[0011] The present invention also provides a method for percutaneously introducing an implant into a surgical site.

The method includes the steps of creating a minimally invasive pathway from a percutaneous incision to a surgical site, and advancing an implant holder along the pathway with an implant mated to a distal end thereof in a lengthwise orientation, such that the implant is oriented in a direction that is substantially parallel to a longitudinal axis of the implant holder. The implant holder is then used to move the implant into a position in which the implant is oriented in a direction that is substantially transverse to the longitudinal axis of the implant holder. The implant can then be released from the implant holder, and the implant holder is then removed from the percutaneous access device. In an exemplary embodiment, the pivoting element is biased to the second position, and the trigger is actuated during introduction and advancement of the implant holder through the percutaneous access device.

BRIEF DESCRIPTION OF THE DRAWINGS

[0012] **FIG. 1A** is a side, partially cut-away view of a medical implant inserter tool in accordance with one embodiment of the present invention;

[0013] **FIG. 1B** is a cross-sectional view taken along a longitudinal axis of the instrument shown in **FIG. 1A**;

[0014] **FIG. 2A** is a side, partially transparent view of an upper portion of the elongate shaft of the medical inserter tool shown in **FIGS. 1A and 1B**;

[0015] **FIG. 2B** is a cross-sectional view of the upper portion of the elongate shaft shown in **FIG. 2A** taken across line B-B;

[0016] **FIG. 3A** is a side view of a lower portion of the elongate shaft of the medical inserter tool shown in **FIGS. 1A and 1B**;

[0017] **FIG. 3B** is a cross-sectional end view of the lower portion of the elongate shaft shown in **FIG. 3A** taken across line C-C;

[0018] **FIG. 4A** is a side view of a pusher shaft of the medical inserter tool shown in **FIGS. 1A and 1B**;

[0019] **FIG. 4B** is a cross-sectional view of the pusher shaft of **FIG. 4A** taken across line A-A;

[0020] **FIG. 5** is a side perspective view of an o-ring retaining member of the medical inserter tool shown in **FIGS. 1A and 1B**;

[0021] **FIG. 6A** is a distal, side perspective view of a pivoting element of the medical inserter tool shown in **FIGS. 1A and 1B**;

[0022] **FIG. 6B** is a proximal, side perspective view of a pivoting element of the medical inserter tool shown in **FIGS. 1A and 1B**;

[0023] **FIG. 7A** is a perspective view of the distal end of the medical inserter tool shown in **FIGS. 1A and 1B** with the pivoting element in a first position;

[0024] **FIG. 7B** is a perspective view of the distal end of the medical inserter tool shown in **FIGS. 1A and 1B** with the pivoting element in a second, pivoted position;

[0025] **FIG. 8** is an enlarged, partially cut-away view of a portion of the medical inserter tool shown in **FIGS. 1A and 1B**;

[0026] **FIG. 9A** is a side view of a driver shaft of the medical inserter tool shown in **FIGS. 1A and 1B**;

[0027] **FIG. 9B** is a distal, side perspective view of a distal portion of the medical inserter tool shown in **FIGS. 1A and 1B**;

[0028] **FIG. 9C** is a cross-sectional, side view of a distal portion of the medical inserter tool shown in **FIGS. 1A and 1B**;

[0029] **FIG. 10A** is a perspective view of one embodiment of an anterior buttress plate for use with the medical inserter tool shown in **FIGS. 1A and 1B**;

[0030] **FIG. 10B** is a side perspective view of the anterior buttress plate shown in **FIG. 10A** mated to the pivoting element of the medical inserter tool shown in **FIGS. 1A and 1B**;

[0031] **FIG. 10C** is a side perspective view of the anterior buttress plate and medical inserter tool shown in **FIG. 10B** with the plate in an in-line position;

[0032] **FIG. 11** is a partially-transparent side view of another embodiment of a medical inserter tool in accordance with the present invention having a spinal rod mated thereto and positioned perpendicular to a longitudinal axis of the tool;

[0033] **FIG. 12** is a partially-transparent side view the medical inserter tool of **FIG. 11** with the spinal rod positioned transverse to the longitudinal axis of the tool;

[0034] **FIG. 13A** is a side, partially transparent view of a pivoting element of the medical inserter tool shown in **FIG. 11**;

[0035] **FIG. 13B** is a perspective view of a portion of the spinal rod shown in **FIG. 11**; and

[0036] **FIG. 13C** is a perspective end view of another embodiment of a spinal rod in accordance with the present invention; and

[0037] **FIG. 14** is side perspective view of the medical inserter tool shown in **FIG. 11** disposed through a percutaneous access tube that is coupled to a spinal implant.

DETAILED DESCRIPTION OF THE INVENTION

[0038] The present invention provides a medical inserter tool that can be used to introduce a medical implant into a surgical site, preferably using minimally invasive techniques. The inserter tool can have a variety of configurations, but in general, the inserter tool should be effective to engage and manipulate the implant into two or more positions. In an exemplary embodiment, the tool includes an elongate shaft having proximal and distal ends and defining a longitudinal axis extending therebetween, and a pivoting element that is coupled to the distal end of the shaft and that is adapted to engage a spinal implant. In use, the pivoting element is movable between a first position, in which the pivoting element is substantially longitudinally aligned with the shaft, and a second position, in which the pivoting element is substantially transverse to the longitudinal axis of the shaft. The device also preferably includes an actuator mechanism that is effective to move the pivoting element between the first and second positions.

[0039] The medical inserter tool of the present invention is particularly advantageous in that it enables reliable and controlled movement of an implant between several orientations, and in particular it allows an implant, preferably one having an elongate configuration, to be inserted through a percutaneous access device in a lengthwise orientation, and then to be manipulated to position the implant as required for implantation, which can be at an angle with respect to a longitudinal axis of the percutaneous access device. The medical inserter tool can also advantageously be adapted to selectively engage and disengage the implant, thus allowing the tool to be easily removed from the implant once it is implanted. A person skilled in the art will appreciate that the medical inserter tool can have a variety of configurations, and it can be used to deliver a variety of implants to a surgical site, either using minimally-invasive techniques or using conventional surgical approaches.

[0040] **FIGS. 1A and 1B** illustrate an exemplary embodiment of a medical inserter tool **10** in accordance with the present invention. As shown, the tool **10** generally includes an elongate shaft **12** having a pivoting element **14** that is pivotally coupled to a distal end **12***d* thereof and that is effective to engage an implant. The tool **10** also includes an actuator mechanism, e.g., a trigger **18**, that is coupled to a proximal end **12***p* of the elongate shaft **12**, and that is effective to move a pusher shaft **16** that is slidably disposed with respect to the elongate shaft **12**, which in turn is effective to move the pivoting element **14** between a first position, in which the pivoting element **14** is longitudinally aligned with the elongate shaft **12**, as shown, and a second position, in which the pivoting element **14** is substantially transverse to a longitudinal axis L of the shaft **12** (see **FIG. 7B**). Such movement of the pivoting element **14** allows an implant to be introduced lengthwise through a percutaneous access device, with the implant in a position that is substantially in-line with the longitudinal axis L of the tool **10**, and then to be subcutaneously pivoted into a desired position, which is preferably transverse to the longitudinal axis L of the tool **10**. The tool **10** also includes a driver shaft **20**, only a portion of which is shown in **FIG. 1A**, that is effective to couple to a mating element on the pivoting element **14** to engage and/or release an implant from the pivoting element **14**.

[0041] The elongate shaft **12** of the inserter tool **10** can have a variety of configurations, and it can be formed from one or more components. By way of non-limiting example, the elongate shaft **12** can optionally be formed from one or more elongate tubes having one or more lumens and/or cavities formed therein. In an exemplary embodiment, the elongate shaft **12** has a generally cylindrical shape and it includes proximal and distal ends **12***p*, **12***d* that define a longitudinal axis L. As shown in **FIGS. 2A-3B**, the elongate shaft **12** is formed from upper and lower portions **12***a*, **12***b*, which are illustrated separated from one another. Each portion **12***a*, **12***b* of the shaft **12** can have a generally elongate, hemi-spherical shape such that, when the portions **12***a*, **12***b* are combined, they form a generally cylindrical, elongate shaft **12**. The upper and lower portions **12***a*, **12***b* also define a cavity therein when joined that is effective to slidably receive the pusher shaft **16**, and to rotatably seat the driver shaft **20**. A person skilled in the art will appreciate that, while not illustrated, the driver shaft and/or the pusher shaft can have any configuration, and they can be disposed anywhere in relation to the elongate shaft **12**.

[0042] The upper portion **12***a* of the elongate shaft **12** is shown in more detail in **FIGS. 2A and 2B**, and it includes a cavity **22** formed therein and extending between the proximal and distal ends **12***p*, **12***d* thereof. The cavity **22**, which can be in the form of a lumen, is preferably effective to receive the driver shaft **20**, as well as a portion of a pusher shaft **16**, each of which will be discussed in more detail below. While the shape of the cavity **22** can vary depending on the shape of the driver shaft **20** and the pusher shaft **16**, the illustrated cavity **22** includes a hemi-spherical concave portion **22***a*, and a substantially T-shaped portion **22***b*. The hemi-spherical concave portion **22***a* seats a portion of the driver shaft **16**, which has a generally cylindrical shape, and the T-shaped portion **22***b* is effective to receive a T-shaped member **34** that extends along the length of the top of the pusher shaft **16** to mate the upper portion **12***a* to the pusher shaft **16**. The T-shaped member **34** and the corresponding T-shaped portion **22***b* are advantageous in that they allow the pusher shaft **16** to slide with respect to the upper portion **12***a*. A person skilled in the art will appreciate that virtually any mating technique can be used to provide a sliding connection between the pusher shaft **16** and the upper portion **12***a*.

[0043] The lower portion **12***b* of the elongate shaft **12**, which is shown in **FIGS. 3A and 3B**, also mates to the pusher shaft **16**, and it can also include a variety of mating elements formed thereon for mating to the pusher shaft **16**. Again, the mating element should be effective to allow slidable movement of the pusher shaft **16** with respect to the lower portion **12***b*. In an exemplary embodiment, the lower portion **12***b* includes one or more pin members (not shown) formed thereon that are adapted to be disposed within one or more corresponding grooves **36***a-c* **(FIG. 4A)** formed on a bottom surface of the pusher shaft **16**, which will be discussed below. The pins can be configured to press-fit into the grooves **36***a-c* on the pusher shaft **16** to prevent removal of the lower portion **12***b* from the pusher shaft **16**, yet to allow slidable movement therebetween.

[0044] The pusher shaft **16** is shown in **FIG. 4A**, and it can have a variety of configurations. By way of non-limiting example, the pusher shaft **16** can have a generally cylindrical, elongate shape, or it can be in the form of a pusher bar or rod. In the illustrated embodiment, the pusher shaft **16** is in the form of a generally elongate rod and, as previously stated, the pusher shaft **16** includes a T-shaped member **34** that extends along the length of a top surface **16***c* thereof, and it includes one or more pin members (not shown) formed on a bottom surface **16***d* thereof. In addition, as shown in **FIG. 4B**, the pusher shaft **16** can also include a hemi-spherical concave portion **17** formed in the T-shaped member **34** that is effective to seat a portion of the driver shaft **18**. The concave portion **22***a* on the upper portion **12***a* of the elongate shaft **12** and the concave portion on the pusher shaft **16** together form an elongate, cylindrical lumen that is effective to receive the driver shaft **18**. The lumen, i.e., the concave portions, should be adapted to allow free rotation of the driver shaft **18**.

[0045] When the upper portion **12***a*, pusher shaft **16**, and lower portion **12***b* are all mated to one another, as shown in **FIGS. 1A and 1B**, the pusher shaft **16** is allowed to slide between and with respect to the upper and lower portions **12***a*, **12***b*. Movement between the upper and lower portions **12***a*, **12***b*, however, should be prevented. Accordingly, in an exemplary embodiment, the upper and lower portions **12***a*,

12*b* are mated to one another by an o-ring type retainer member **38**. The retainer member **38** is shown in **FIG. 5** and it generally includes two bores **40***a*, **40***b* extending therethrough. The first bore **40***a*, which is the smaller bore, is adapted to receive a threaded member, e.g., a screw, that is effective to threadably mate to a threaded bore **42** formed in a transverse member **41** **(FIG. 2A)** that is formed on the proximal end **12***p* of the upper portion **12***a*. The screw (not shown) also extends into a threaded bore **44** **(FIG. 3B)** that is formed on the distal end **12***d* of the lower portion **12***b*. Accordingly, the bore **42** in the transverse member **41** on the upper portion **12***a* **(FIG. 2A)** is adapted to align with the bore **44** formed on the distal end **12***d* of the lower portion **12***b* of the elongate shaft. The second, larger bore **40***b* in the retainer member **38** is effective to receive the driver shaft **18**, which extends between the upper portion **12***a* and the pusher shaft **16**, and which will be discussed in more detail below.

[**0046**] As previously stated, the tool **10** also includes a pivoting element **14**, which is shown in **FIGS. 6A-7B**. The pivoting element **14** should be effective to engage an implant and to manipulate the implant into two or more positions. The range of motion of the pivoting element **14** can vary depending on the type of implant used, as well as the desired positioning of the implant. In an exemplary embodiment, however, the pivoting element **14** is movable between a first position, shown in **FIG. 7A**, in which the pivoting element **14** is substantially longitudinally aligned with the longitudinal axis L of the elongate shaft **12**, and a second position, shown in **FIG. 7B**, in which the pivoting element **14** is positioned substantially transverse to the longitudinal axis L of the elongate shaft **12**.

[**0047**] While the pivoting element **14** can mate to any portion of the elongate shaft **12** and/or the pusher shaft **16**, the pivoting element **14** is preferably adapted to pivotally mate to the distal end **12***d* of the lower portion **12***b* of the elongate shaft **12** to allow the pusher shaft **16** to effect pivotal motion of the pivoting element **14** about the lower portion **12***b* of the elongate shaft **12**. Virtually any mating technique known in the art can be used to pivotally mate the pivoting element **14** to the lower portion **12***b* including, for example, a pin member that is disposed through bores formed in the pivoting element **14** and the lower portion **12***b*. In an exemplary embodiment, the pivoting element **14** mates to the distal-most end **12***d* of the lower portion **12***b* at pivot point P, as shown.

[**0048**] In order to move the pivoting element **14** between the first and second positions, the distal end **16***b* of the pusher shaft **16** can be adapted to apply a force to the pivoting element **14** to rotate it about the pivot point P, or the pusher shaft **16** can employ other techniques that are effective to move the pivoting element **14**. In an exemplary embodiment, however, the distal end **16***b* of the pusher shaft **16** is coupled to the pivoting element **14** in a manner that results in simultaneous movement of the pivoting element **14** as the pusher shaft **16** is moved in distal and proximal directions. While a variety of techniques can be used to couple the distal end **16***b* of the pusher shaft **16** to the pivoting element **14**, in the illustrated embodiment the pusher shaft **16** includes opposed pin members (only one pin member **30** is shown; see also **FIGS. 7A and 7B**) formed thereon that are adapted to extend into opposed slots **32***a*, **32***b* **(FIGS. 6A-7B)** that are formed in the pivoting element **14**. The opposed slots **32***a*, **32***b* are positioned at an angle which results in movement of the pivoting element **14** as the pusher shaft **16** is moved. In particular, distal movement of the pusher shaft **16**, by actuation of the trigger **18**, causes the pins **30** to slide within the slots **32***a*, **32***b*, thus forcing the pivoting element **14** to pivot, moving from the first position, shown in **FIG. 7A**, to the second position, shown in **FIG. 7B**. Release of the trigger **18** will subsequently cause the pusher shaft **16** to move in a proximal direction, thus causing the pins **30** to slide in the opposite direction within the slots **32***a*, **32***b*, pulling the pivoting element **14** back to the first position **(FIG. 7A)**.

[**0049**] An exemplary embodiment of a trigger **18** that is effective to move the pusher shaft **16** is shown in **FIGS. 1A, 1B**, and **8**. As shown, the trigger **18** is coupled to a proximal end **12***a* of the tool **10** and it is effective to move the pusher shaft **16**, thereby moving the pivoting element **14**. The trigger **18** includes a stationary handle **46** that is fixedly attached to a proximal end **12***p* of the elongate shaft **12**, and a pivoting handle **48** that is pivotally coupled to the stationary handle **46** at pivot point X. The end of the pivoting handle **48** that is adjacent to the pivot point X includes a protrusion or cam **28** formed thereon that is adapted to extend into the corresponding detent or cam surface **26** formed on a proximal portion of the pusher shaft **16**, as shown in **FIG. 8**. Thus, when the pivoting handle **48** is brought toward the stationary handle **46**, the cam **28** is rotated to push the pusher shaft **16** in a distal direction. Conversely, release of the pivoting handle **48** is effective to pull the pusher shaft **16** back into its original, proximal position. A person skilled in the art will appreciate that a variety of other techniques can be used to effect sliding movement of the pusher shaft **16**, and/or to control pivotal movement of the pivoting member **14**.

[**0050**] In another embodiment of the present invention, the trigger **18** can include a biasing element that is effective to bias the pivoting handle **48** such that a force effective to overcome the biasing force is necessary to move the pivoting handle **48** toward the stationary handle **46**. As a result, the biasing element in turn is effective to bias the pivoting element **14** to the first position. While virtually any biasing element can be used, in an exemplary embodiment, shown in **FIG. 1A**, the biasing element is formed from male and female spring components **52**, **54** that are positioned between the pivoting handle **48** and the stationary handle **46**, as shown in **FIG. 1A**. Each component has a first end **52***a*, **54***a* that mates to one of the pivoting handle **48** and the stationary handle **46**, and a second end **52***b*, **54***b* that couples to one another and that creates the biasing force between the handles **46**, **48**.

[**0051**] In use, referring back to **FIGS. 6A-7B**, the pivoting element **14** is adapted to mate to an implant, and thus the configuration, shape, and size of the pivoting element **14** can vary depending on the intended use. In the illustrated embodiment, the pivoting element **14** is configured to mate to a spinal bone plate. In general, the pivoting element **14** includes a proximal end **56***a*, a distal end **56***b*, and top and bottom portions **58***a*, **58***b* extending therebetween. As previously indicated, the distal end **56***b* of the bottom portion **58***b* of the pivoting element **14** pivotally mates to the distal end **12***d* of the lower portion **12***b* of the elongate shaft **12** at pivot point P, and the proximal end **56***a* of the bottom portion **58***b* includes the opposed elongate slots **32***a*, **32***b* that

receive the pin members **30** on the pusher shaft **16** to effect pivoting movement of the pivoting element **14**.

[**0052**] The top portion **58***a* of the pivoting element **14** includes a mating element that is adapted to releasably engage a spinal bone plate. While virtually any mating element can be used, in an exemplary embodiment, as shown, a set screw **60** is freely rotatably disposed within a bore **66** that extends through the top portion **58***a* in the proximal-distal direction. The set screw **60** includes a head having a socket **62** formed therein, and a distally-extending threaded shank **64** that is adapted to be threadably disposed within a threaded bore formed in a spinal bone plate. The socket **62** in the head of the set screw **60** has a shape that is complementary to a shape of the outer surface of a distal end **20***b* of the driver shaft **20**, which is discussed below. As shown in **FIG. 6B**, the socket **62** is hexagonally-shaped. The complementary shapes allow the driver shaft **20** to rotate the set screw **60** when the driver shaft **20** is disposed therein. It also allows the driver shaft **20** to be easily separated from the pivoting element **14**, thus allowing the pivoting element **14** to be moved between the first and second positions.

[**0053**] A person skilled in the art will appreciate that the pivoting element can have a variety of configurations, and it can be adapted such that use of a driver shaft is not necessary. By way of non-limiting example, the pivoting element could be in the form of a housing having a mandrel or hole containing spring clips and/or deflectable rings or arms.

[**0054**] The driver shaft **20** can have any configuration, but an exemplary embodiment of a driver shaft is shown in **FIGS. 9A-9C**. As shown, the driver shaft **20** has a generally elongate shape and includes a proximal end **20***a* with a handle or gripping knob **20***c* formed thereon or mated thereto, and a distal end **20***b* that is adapted to couple to the set screw **60** to rotate the set screw **60**. While the configuration of the distal end **20***b* can vary depending on the configuration of the set screw **60**, or other mating element on the pivoting element **14**, in an exemplary embodiment the distal end **20***b* of the driver shaft **20** has an outer surface that complements the shape of the socket **62** in the set screw **60**, such as, for example, a hexagonal shape. As previously stated, a portion of the driver shaft **18** extends through the retainer member **38**, which is thus effective to maintain the position of the driver shaft **18** with respect to the elongate shaft **12** by preventing longitudinal movement, yet allowing rotational movement, of the driver shaft **18**. This can be achieved using, for example, an o-ring (not shown) that is disposed within the second bore **40***b*, or by providing other mechanisms such as, for example, pins, spring clips, and/or deflectable rings/arms.

[**0055**] In use, the driver shaft **20** is disposed between the pusher shaft **16** and the upper portion **12***a* of the elongate shaft **12** such that the proximal end **20***a* of the driver shaft **20** extends through the o-ring in the second bore **40***b* in the retainer member **38**, and the knob **20***c* is positioned proximally to the retainer member **38**. The distal end **20***b* of the driver shaft **20** is configured to be disposed within the socket **62** in the set screw **60** when the pivoting element **14** is in the first position, as shown in **FIG. 9C**. In this position, rotation of the driver shaft **20** is effective to rotate the set screw **60** and thereby engage a spinal implant. Conversely, when the pivoting element **14** is moved into the second position, shown in **FIG. 7B**, the distal end **20***b* of the driver shaft **20** (the driver shaft **20** is hidden by the pusher bar in **FIG. 7B**) is separated from the pivoting element **14**. As a result, an implant mated to the pivoting element **14** can only be released from the pivoting element **14** when the pivoting element **14** is coupled to the driver shaft **20**, i.e., when the pivoting element **14** is in the first position.

[**0056**] Referring now to **FIG. 10A**, an exemplary embodiment of a spinal bone plate **70** for use with the tool **10** of the present invention is shown. In general, the plate **70** is an anterior buttress plate and it has a substantially planer configuration with opposed first and second ends **70***a*, **70***b*. The second end **70***b* includes first and second screw bores **72***a*, **72***b* formed therein for receiving a bone screw to attach the plate **70** to a vertebra. The plate **70** also includes a threaded bore **74** formed at a substantial mid-portion thereof for threadably receiving the set screw **60** on the pivoting element **14**.

[**0057**] In order to engage the plate **70** using tool **10**, the distal end **12***d* of the elongate shaft **12** is positioned relative to the plate **70**, as shown in **FIG. 10B**, such that the plate **70** extends in a direction that is substantially transverse to the longitudinal axis L of the elongate shaft **12**. The knob **20***c* on the driver shaft **20** is then grasped and rotated to thread the set screw **60** into the bore **74** in the plate **70**, thus mating the plate **70** to the pivoting element **14**. The trigger **18** can then be actuated to move the pivoting element **14** and the plate **70** into the second position, shown in **FIG. 10C**, in which the plate **70** is substantially in-line with the longitudinal axis L of the elongate shaft **12**. In this position, the plate **70** and the shaft **12** can be introduced through a percutaneous access device to deliver the plate **70** to an implant site. Once fully extended through the access device, the trigger **18** can be released, thus causing the pivoting element **14** to return to the first position and the plate **70** to return to the substantially transverse position. One or more bone screws can then be inserted through the screw bores **72***a*, **72***b* in the plate **70** to attach the plate **70** to bone, and the driver shaft **20** can be rotated in an opposite direction to disengage the set screw **60** from the plate **70**, thus releasing the tool **10** from the plate **70**.

[**0058**] In another embodiment of the present invention, the pivoting element **14** can include an anti-rotation mechanism formed thereon to prevent the plate **70** from rotating relative to the pivoting element **14** when they are mated to one another. While the anti-rotation mechanism can have any configuration, in the illustrated embodiment it is in the form of a protrusion **77**, shown in **FIG. 6A**, that extends distally from the distal end of the pivoting element **14**, preferably at a location that is adjacent to the set screw **60**. The protrusion **77** is configured to fit within a corresponding detent **76** from in the spinal bone plate **70**, as shown in **FIG. 10A**. A person skilled in the art will appreciate that a variety of other techniques can be used to prevent rotation between an implant and the pivoting element **14**.

[**0059**] **FIGS. 11-14** illustrate yet another embodiment of a medical implant inserter tool **100**. In this embodiment, the inserter tool **100** is specifically adapted for use with a spinal fixation rod **170**. Inserter tool **100** is similar to inserter tool **10** is most aspects, thus like reference numbers are used to refer to like parts. In general, the spinal rod inserter tool **100** includes an elongate shaft **112** having proximal and distal

ends **112***p*, **112***d*, and an inner lumen **112***c* extending therebetween. Unlike tool **10**, the elongate shaft **112** is preferably formed from a single elongate tube having an inner lumen or cavity formed therein that seats only the pusher shaft (not shown). The configuration of the shaft **112** can, however, include any number of components and/or lumens/cavities extending therethrough or formed therein. The pusher shaft is similar to pusher shaft **16**, and it includes a proximal end that is coupled to a trigger **118**, and a distal end that is coupled to a pivoting element **114**. The trigger **118** can function similar to trigger **18** of tool **10**, and the pusher shaft can be coupled to the pivoting element **114** in the same manner that pusher shaft **16** is coupled to pivoting element **14** of tool **10**.

[**0060**] The inserter tool **100** can also include a driver shaft (not shown) that is effective to rotate a threaded engagement mechanism, such as set screw **160**, that is disposed within the pivoting element **114**. The driver shaft is similar to driver shaft **20** of inserter tool **10**, however, is not disposed through the elongate shaft **112** as with inserter tool **10**, but rather it is removably disposed through a bore **113** that extends through a proximal end **112***p* of the shaft **112** adjacent to the trigger **118**. The bore **113** is preferably offset from the longitudinal axis L' of the elongate shaft **112**. This is desired to allow the driver shaft to couple to the set screw **160** in the pivoting element **114** when the pivoting element **114** is in the second, pivoted position (**FIG. 12**), as will be discussed in more detail below.

[**0061**] While tool **100** is generally similar to tool **10**, one significant difference is the pivoting element **114**. As shown in **FIGS. 11-12**, the pivoting element **114** is effective to engage the spinal rod **170** such that the rod **170** is substantially in-line with the longitudinal axis L' of the elongate shaft **112** when the pivoting element **114** is in the first position, unlike inserter tool **10** which maintains the spinal bone plate **70** in a position that is substantially transverse to the longitudinal axis L of the elongate shaft **12** when the pivoting element is in the first position. Actuation of the trigger **118** is effective to rotate the pivoting element **114**, thus rotating the rod **170** to be positioned substantially transverse to the longitudinal axis L'.

[**0062**] **FIGS. 13A-13B** illustrate pivoting element **114** and spinal rod **170** in more detail. As shown, the pivoting element **114** includes a distal end **114***d* that pivotally mates to the distal-most end **112***d* of the elongate shaft **112**, and a proximal end **114***p* that is adapted to mate to the spinal rod **170**. In this embodiment, the set screw **160** extends through the proximal end **114***p* and it is adapted to engage a corresponding bore **171** formed in the spinal rod **170**. The proximal portion **114***p* of the pivoting element **114** can also optionally be adapted to be received by a cut-out portion **173** in the spinal rod, as shown in **FIG. 13B**, to prevent rotation between the pivoting member **114** and the rod **170** when mated to one another.

[**0063**] In another embodiment, shown in **FIG. 13C**, the pivoting element can be adapted to engage a proximal end of the spinal rod. The engagement between the pivoting element and the proximal end of the spinal rod is preferably an internal engagement, rather than an external engagement, and in an exemplary embodiment, as shown, the spinal rod **170'** includes a threaded bore **171'** formed therein for receiving a threaded engagement mechanism formed on the pivoting element. In this embodiment, the pivoting element is preferably similar to pivoting element **14** shown in **FIGS. 6A and 6B**, such that the threaded engagement mechanism, e.g., set screw **60** engages the proximal end of the rod **170'**.

[**0064**] Referring back to **FIG. 12**, in use, due to the configuration of the pivoting member **114** and the position of the set screw **160**, the driver shaft can only couple to and rotate the set screw **160** when the pivoting element **114** is moved into the second position. Thus, the trigger **118** must be actuated to move the pusher shaft to move the pivoting element **114** from the first position to the second position. Once in the second position, the driver shaft, which can be an exteriorly placed screw driver, can be positioned through the bore **113** in the proximal portion **112***p* of the elongate shaft **112** to insert the distal end of the driver shaft into the head of the set screw **160**. The driver shaft can then be rotated to engage and release the rod **170**.

[**0065**] A person skilled in the art will appreciate that a variety of other techniques can be used to mate an implant to the pivoting element of the present invention. By way of non-limiting example, where the implant is a spinal rod, any type of clamping mechanism can be used to releasably engage the rod. Other mating elements in addition to clamps include, for example, hooks, dimples, and ball plungers.

[**0066**] The present invention also provides methods for percutaneously introducing an implant into a surgical site. The method can be used to introduce any type of implant, and it can be achieved using a variety of inserter tools. The method can also be used with a variety of percutaneous access devices, including, for example, trocars, percutaneous access tubes, etc. An exemplary percutaneous access device for use with the present invention is disclosed in an application entitled "Percutaneous Access Devices and Bone Anchor Assemblies," filed concurrently herewith.

[**0067**] In an exemplary embodiment, the method utilizes a percutaneous access device that is positioned through a minimally invasive incision such that a portion of the access device remains outside of the patient's body, and the remainder of the access device provides a pathway to a surgical site. An exemplary access device and methods for implanting the same is disclosed in an application entitled "Methods and Devices for Minimally Invasive Spinal Fixation Element Placement," filed concurrently herewith and incorporated by reference in its entirety.

[**0068**] The method includes the steps of introducing an implant holder having an implant mated to a distal end thereof into the percutaneous access device in a lengthwise orientation, with the implant oriented in a direction that is substantially parallel to the longitudinal axis of the implant holder. Thus, for example, where spinal plate **70** is being implanted, the trigger **18** is actuated to hold the pivoting element **14** in the second position, as shown in **FIG. 10C**. Alternatively, where spinal rod **170** is being implanted, the pivoting element **114** is in the first position, as shown in **FIG. 11**, with the trigger **118** released.

[**0069**] The implant holder **10**, **100** is then advanced distally to position the implant **70**, **170** at a surgical site. The trigger **18**, **118** can then be released or actuated, depending on the configuration of the device **10**, **100**, to pivot the pivoting element **12**, **114** and rotate the implant **70**, **170** into a desired position. **FIG. 14**, for example, illustrates implant

holder **100** inserted through a percutaneous access tube **200** that is coupled to spinal implant **210***a*. As shown, the trigger **118** is actuated to extend the rod **170** in a direction that is substantially transverse to the longitudinal axis L' of the implant holder **100**, thereby positioning the rod **170** in the rod-receiving head **211***a-c* of several adjacent spinal implants **210***a-c*. The implant holder **10**, **100** can then be released from the implant **70**, **170**, for example, by rotating the driver shaft to unthread the set screw **60**, **160** from the implant **70**, **170**, and the implant holder **10**, **100** can be removed from the percutaneous access tube.

[**0070**] One skilled in the art will appreciate further features and advantages of the invention based on the above-described embodiments. Accordingly, the invention is not to be limited by what has been particularly shown and described, except as indicated by the appended claims. All publications and references cited herein are expressly incorporated herein by reference in their entirety.

What is claimed is:

1. A medical implant inserter tool, comprising:

an elongate shaft having proximal and distal ends defining a longitudinal axis extending therebetween;

a pivoting element coupled to the distal end of the elongate shaft and movable between a first position, in which the pivoting element is longitudinally aligned with the shaft, and a second position, in which the pivoting element is substantially transverse to the shaft, the pivoting element being adapted to releasably engage a medical implant; and

an actuator mechanism coupled to the proximal end of the elongate shaft and effective to move the pivoting element between the first and second positions.

2. The medical implant inserter tool of claim 1, wherein the actuator mechanism comprises a trigger formed on the proximal end of the elongate shaft, and a pusher shaft slidably disposed with respect to the elongate shaft and extending between the trigger and the pivoting element such that movement of the trigger is effective to move the pusher shaft to effect pivoting movement of the pivoting element between the first and second positions.

3. The medical implant inserter tool of claim 2, wherein the pivoting element is biased to the first position.

4. The medical implant inserter tool of claim 3, further comprising a biasing element coupled to the trigger and effective to bias the pivoting element to the first position.

5. The medical implant inserter tool of claim 3, wherein actuation of the trigger is effective to move the pivoting element into the second position.

6. The medical implant inserter tool of claim 1, wherein the pivoting element includes a mechanism adapted to releasably engage an implant.

7. The medical implant inserter tool of claim 1, wherein the pivoting element includes a threaded engagement mechanism rotatably disposed therein and adapted to releasably engage an implant.

8. The medical implant inserter tool of claim 7, further comprising a driver shaft coupled to the elongate shaft and including a distal end that is effective to rotate the threaded engagement mechanism in the pivoting element.

9. The medical implant inserter tool of claim 8, wherein the driver shaft is separated from the threaded engagement mechanism when the pivoting element is in the second position, and the driver shaft is coupled to and effective to rotate the threaded engagement mechanism when the pivoting element is in the first position.

10. The medical implant inserter tool of claim 8, wherein the elongate shaft includes an upper portion and a lower portion, the pivoting element being pivotally coupled to the lower portion, and the driver shaft extending between the upper and lower portions.

11. The medical implant inserter tool of claim 8, wherein the threaded engagement mechanism includes a socket formed in a proximal end thereof for receiving the distal end of the driver shaft.

12. The medical implant inserter tool of claim 11, wherein the socket of the pivoting element and the distal end of the driver tool have complementary shapes.

13. The medical implant inserter tool of claim 8, further comprising a knob formed on a proximal end of the driver shaft and effective to rotate the driver shaft.

14. The medical implant inserter tool of claim 8, wherein the driver shaft extends through a lumen formed in the elongate shaft.

15. The medical implant inserter tool of claim 14, further comprising an o-ring disposed around a portion of the driver shaft and mated to a portion of the elongate shaft, the o-ring being effective to maintain the position of the driver shaft with respect to the elongate shaft.

16. The medical implant inserter tool of claim 7, further comprising an anti-rotation mechanism formed on the pivoting element and effective to engage and prevent rotation of an implant threadably attached thereto by the threaded engagement mechanism.

17. A spinal implant kit, comprising:

a spinal bone plate;

an implant holder including a proximal end and a distal end that is adapted to releasably engage the spinal bone plate and to move the plate between a first position, in which the plate is substantially longitudinally aligned with the implant holder, and a second position, in which the plate is substantially parallel to a longitudinal axis of the implant holder; and

a cam mechanism formed on the implant holder for moving the plate between the first and second positions.

18. The spinal implant kit of claim 17, wherein the implant holder includes an elongate shaft having proximal and distal ends, and a pivoting element pivotally coupled to a distal end of the elongate shaft and movable between the first and second positions.

19. The spinal implant kit of claim 18, wherein the elongate shaft includes an upper portion and a lower portion, the pivoting element being pivotally coupled to the lower portion.

20. The spinal implant kit of claim 19, further comprising a driver shaft rotatably disposed between the upper and lower portions of the elongate shaft, the driver shaft including a distal end that is effective to rotate a threaded engagement mechanism that is rotatably disposed in the pivoting element.

21. The spinal implant kit of claim 20, wherein the driver shaft is separated from the threaded engagement mechanism when the pivoting element is in the second position, and the

driver shaft is coupled to and effective to rotate the threaded engagement mechanism when the pivoting element is in the first position.

22. The spinal implant kit of claim 18, wherein the implant holder further includes an actuator mechanism that is coupled to the proximal end of the elongate shaft and that is effective to move the pivoting element between the first and second positions.

23. The spinal implant kit of claim 22, wherein the pivoting element is biased to second position.

24. The spinal implant kit of claim 18, wherein the pivoting element is adapted to releasably engage a mid-portion of the plate.

25. The spinal implant kit of claim 18, wherein the plate includes a threaded bore formed therein for receiving a threaded engagement mechanism that is rotatably disposed in the pivoting element.

26. The spinal implant kit of claim 25, wherein the pivoting element includes an anti-rotation mechanism that is adapted to engage and prevent rotation of the plate when the plate is mated to the pivoting element.

27. The spinal implant kit of claim 26, wherein the anti-rotation mechanism comprises a protrusion extending distally from a distal end of the pivoting element when the pivoting element is in the first position, the protrusion being adapted to be disposed within a complementary detent formed in the plate.

28. A method for percutaneously introducing an implant into a surgical site, comprising:

creating a minimally invasive pathway from a percutaneous incision to a surgical site;

advancing an implant holder along the pathway with an implant mated to a distal end thereof in a lengthwise orientation;

subcutaneously pivoting the implant into a desired orientation; and

releasing the implant from the implant holder.

29. A method for percutaneously introducing an implant into a surgical site, comprising:

introducing an elongate implant holder having an implant mated to a distal end thereof into a percutaneous access device that forms a minimally invasive pathway to the surgical site, the implant being oriented in a direction substantially parallel to a longitudinal axis of the implant holder;

advancing the implant holder through the percutaneous access device to position the implant at a surgical site;

causing the implant holder to move the implant into a position in which the implant is oriented in a direction that is substantially transverse to the longitudinal axis of the implant holder;

releasing the implant from the implant holder; and

removing the implant holder from the percutaneous access device.

30. The method of claim 29, wherein the implant holder comprises:

an elongate shaft having proximal and distal ends;

a pivoting element pivotally coupled to the distal end of the shaft and adapted to releaseably engage the implant;

and a trigger formed on the proximal end of the shaft and effective to move the pivoting element between a first in-line position, in which the implant is substantially longitudinally aligned with the elongate shaft, and a second position, in which the implant extends in a direction that substantially transverse to a longitudinal axis of the implant holder.

31. The method of claim 30, wherein the pivoting element is biased to the second position, and the trigger is actuated during introduction and advancement of the implant holder through the percutaneous access device.

32. The method of claim 31, further comprising a biasing element coupled to the trigger and effective to bias the pivoting element to the first in-line position.

33. The method of claim 30, wherein the pivoting element includes a threaded member that is freely-rotatably coupled thereto, and wherein the implant includes a threaded bore for receiving the threaded element.

34. The method of claim 33, wherein the step of removing the implant holder from the percutaneous access device comprises rotating a driver shaft that extends through a lumen in the elongate shaft to cause the driver shaft to rotate the threaded member, thereby releasing the implant.

35. The method of claim 29, wherein the percutaneous access device comprises a trocar.

* * * * *