US 20030000856A1

(19) **United States**

(12) **Patent Application Publication** (10) **Pub. No.: US 2003/0000856 A1**

Lax et al. (43) **Pub. Date: Jan. 2, 2003**

(54) **STORAGE CASE**

(75) Inventors: **Michael Lax**, Westbury, NY (US); **Agjah I. Libohova**, Bronx, NY (US)

Correspondence Address:
OSTROLENK FABER GERB & SOFFEN
1180 AVENUE OF THE AMERICAS
NEW YORK, NY 100368403

(73) Assignee: **Autronic Plastics, Inc.**

(21) Appl. No.: **10/185,596**

(22) Filed: **Jun. 27, 2002**

Related U.S. Application Data

(60) Provisional application No. 60/301,383, filed on Jun. 27, 2001.

Publication Classification

(51) **Int. Cl.**[7] **B65D 85/57**

(52) **U.S. Cl.** **206/310**; 206/308.1

(57) **ABSTRACT**

A software storage case for storing optically readable information or software storage media such as CD-ROMs having an enclosure for receiving literature related to the software and a brace disposed over the enclosure to hinder the movement of the literature so received. The storage case also includes a retainer for retaining optically readable information or software storage media and a biasing element to assist in securing the recording media retained by the retainer.

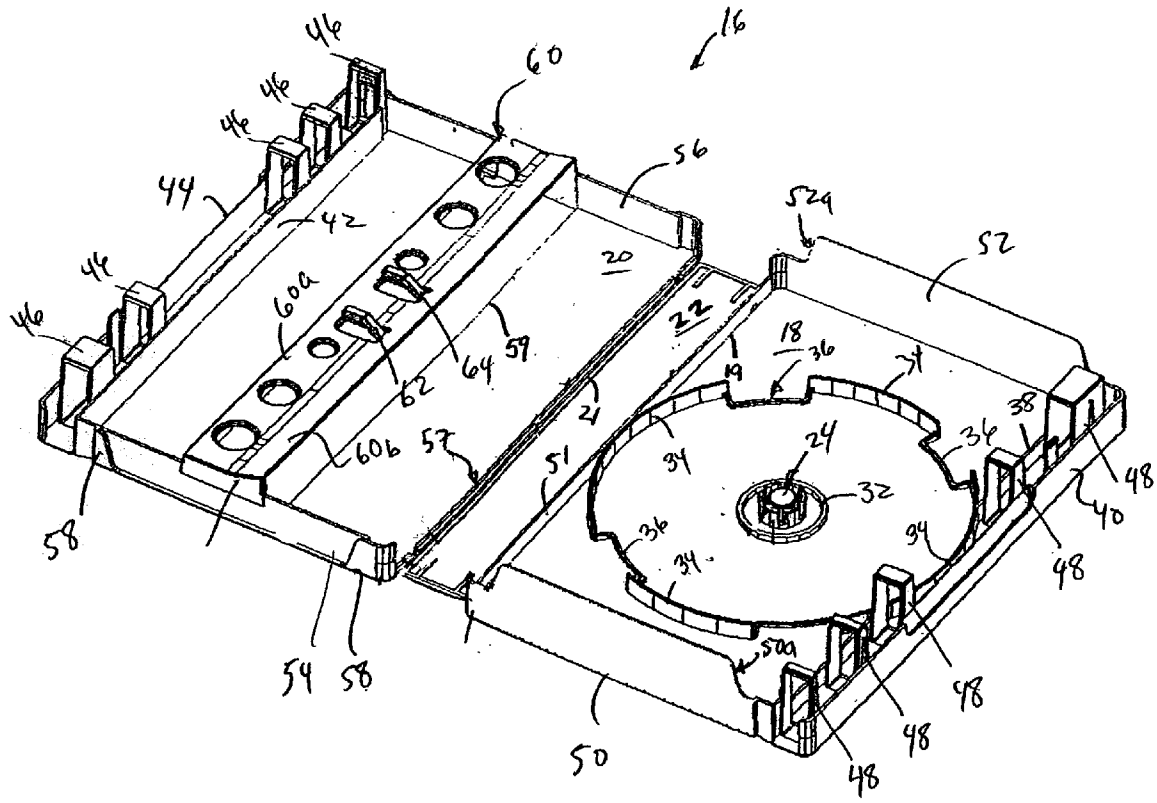

FIG. 1

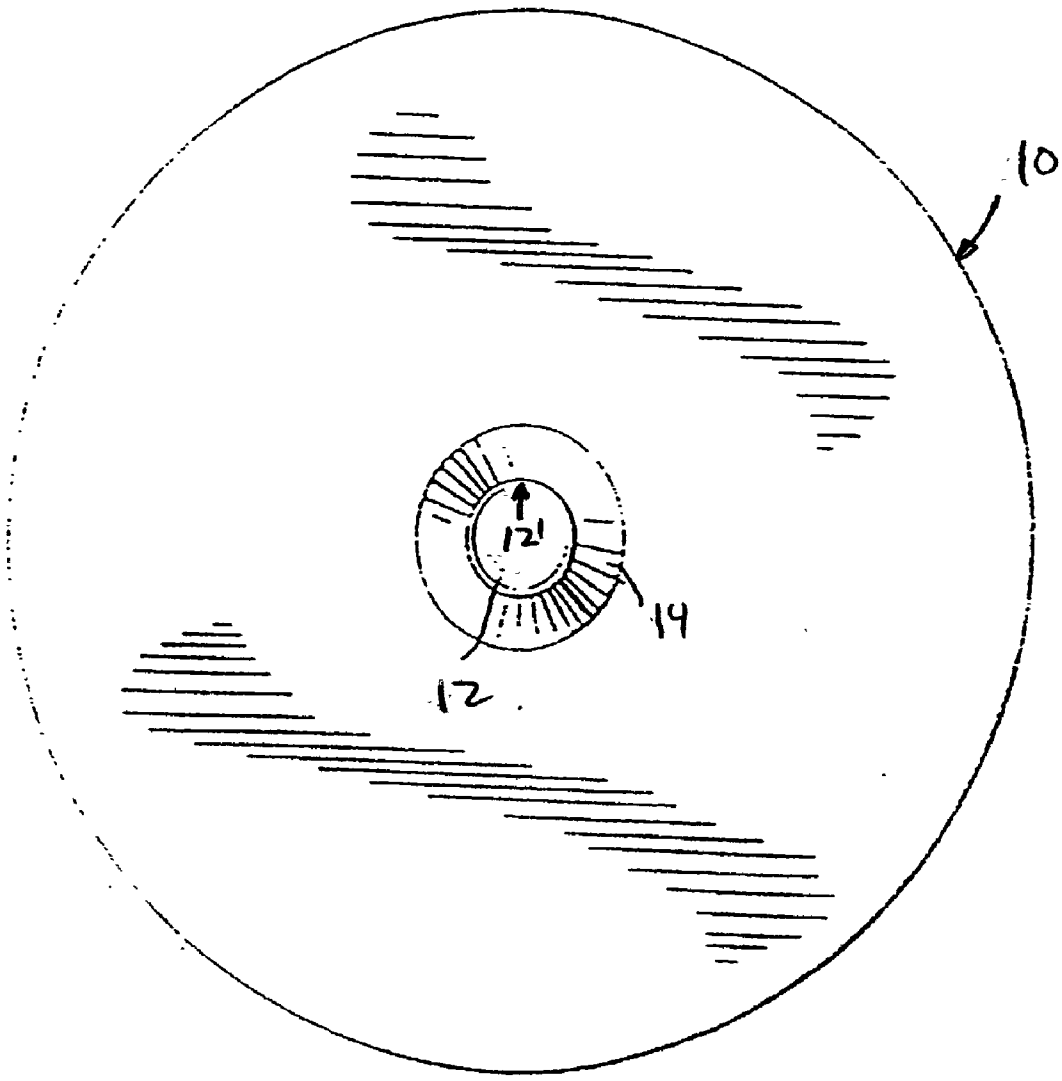

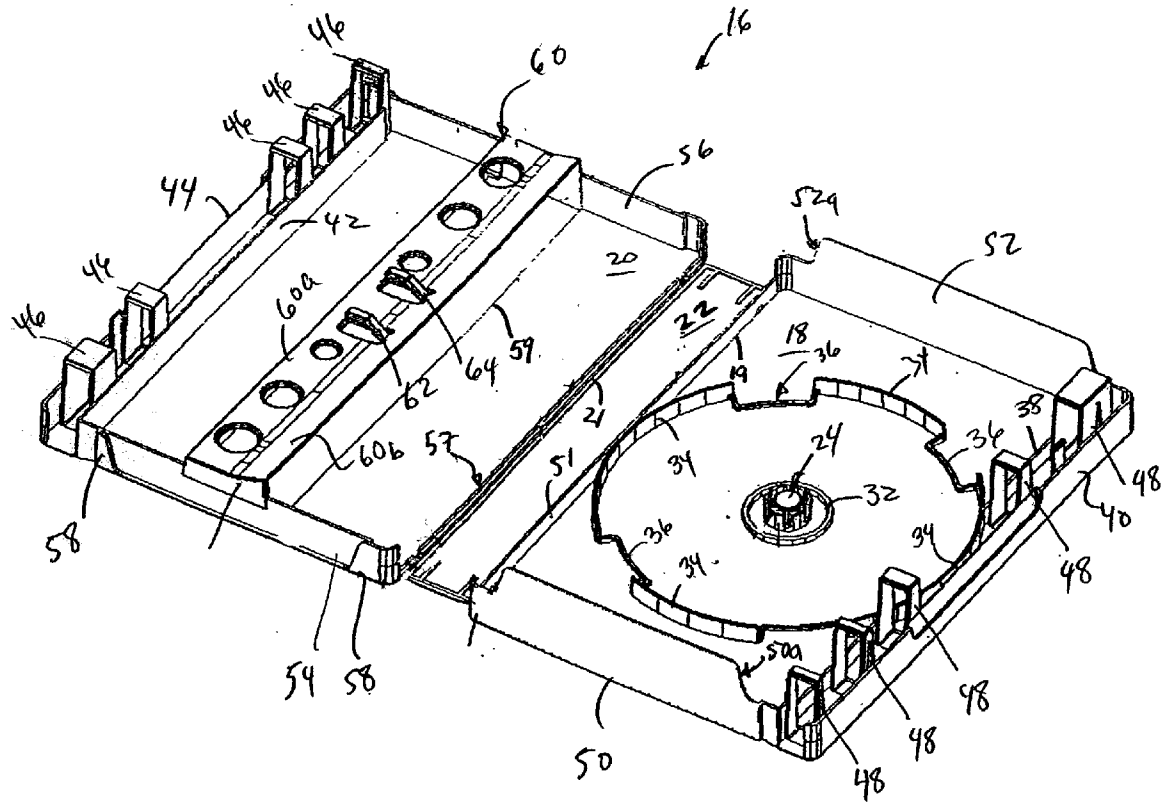
16
60
56
52a
52
44
42
46
60a
60b
62
64
59
20
22
21
18
19
36
34
24
32
38
48
40
57
51
58
54
50a
50

Fig. 2

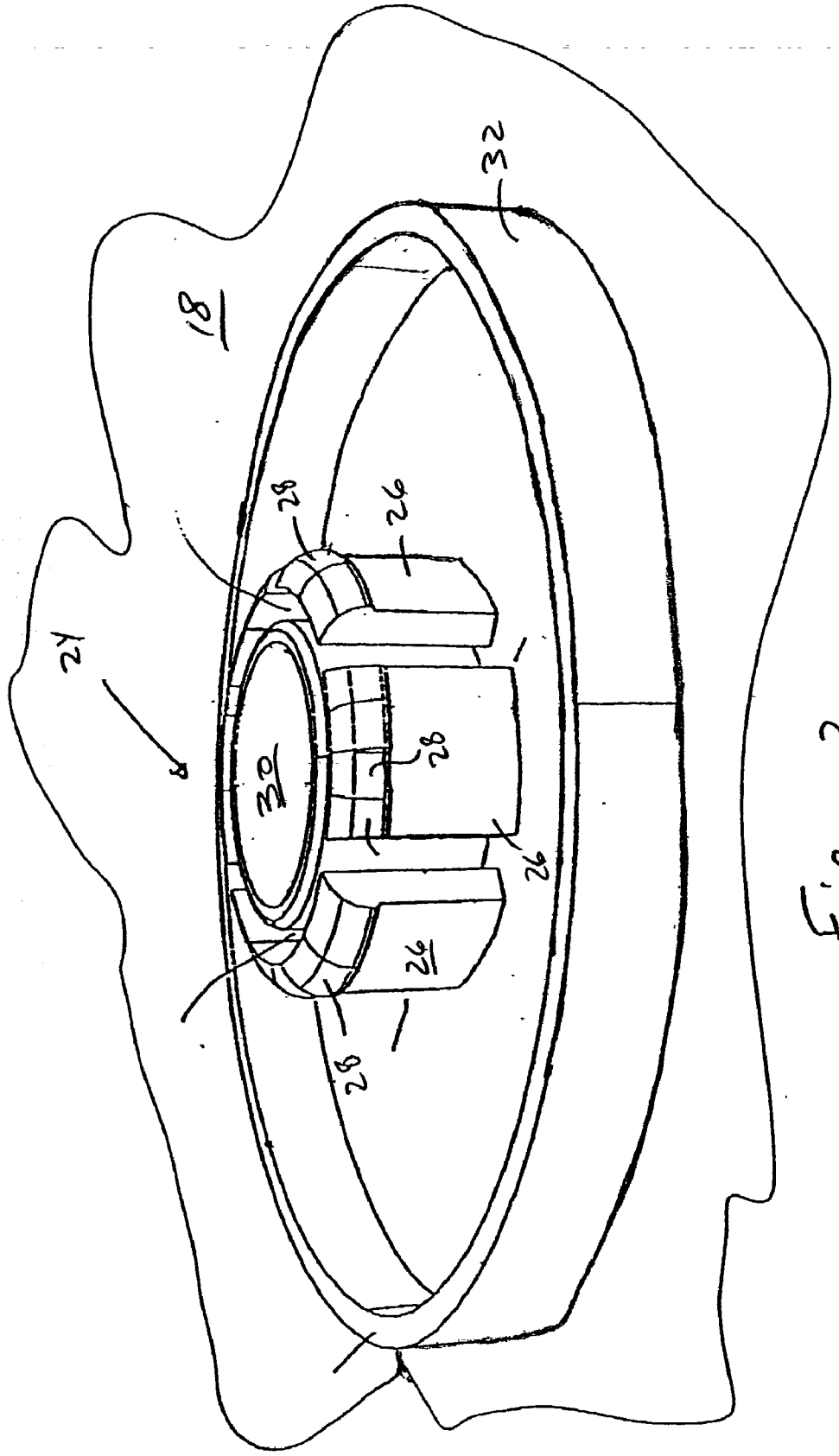

Fig. 3

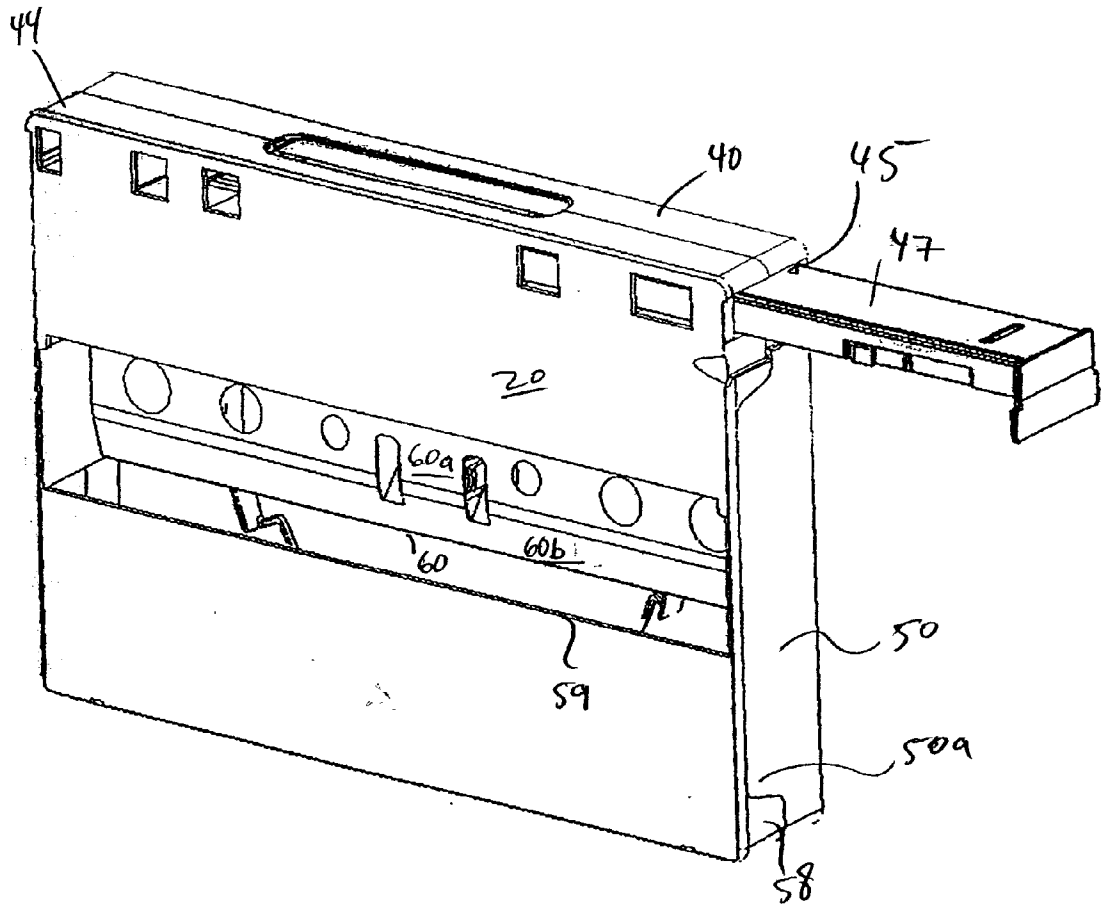

Fig. 4

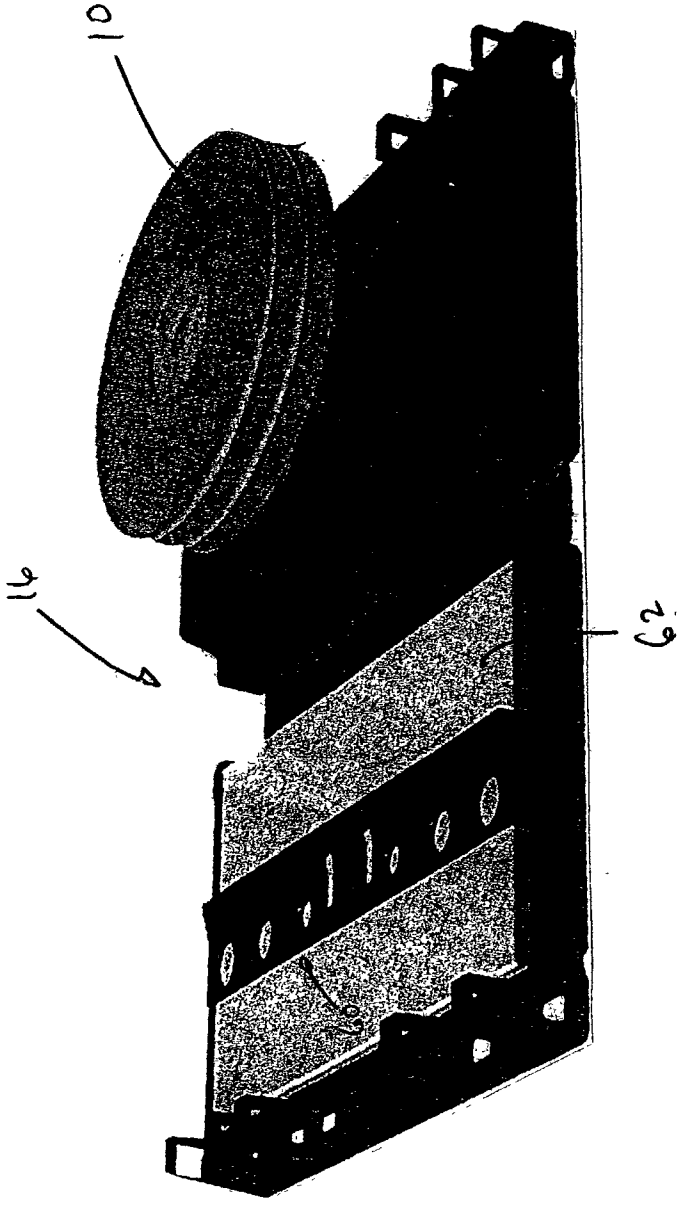

Fig. 5

STORAGE CASE

CROSS-REFERENCE TO RELATED APPLICATION

[0001] This application is based on and claims the benefit of U.S. Provisional Application No. 60/301,383, filed on Jun. 27, 2001, by Michael Lax and Agjah I. Libohova, entitled "Software Storage Case", the entire disclosure of which is incorporated by reference herein.

BACKGROUND OF THE INVENTION

[0002] 1. Field of the Invention

[0003] The present invention relates to a storage case for storing a recording media such as optically readable information storage media and associated literature and more particularly to a storage case for holding computer software and its related literature.

[0004] 2. Description of Related Art

[0005] As the sale of recording media, such as software that is stored on a CD, CD-ROM or DVD continues to grow, retailers are being faced with the opportunity to increase their profits by increasing the volume of their sales. Two major factors, however, affect the potential for profits which may be obtained by an increase in the volume of sales in this field. The first factor concerns loss due to theft. The second factor is the inefficient use of retail space which limits the number of items that may be displayed for sale on the retail floor.

[0006] To address the first problem, at times, retailers display their products behind locked glass windows. While such a practice may reduce theft, it tends to retard sales as it requires the assistance of sales attendants as opposed to allowing the shoppers to help themselves thereby speeding up the sales process.

[0007] To prevent theft, the products such as a CD-ROM and its associated literature, have been packaged in large display boxes. Such packaging may hinder theft by making it more complicated for a thief to gain access to the contents of the package, but reduces the density of products that can be put on the shelves as it increases the size of each package.

[0008] It is thus highly desirable to reduce the size of packaging of interactive media, such as software, while maintaining or improving its security so as to retard or prevent loss due to theft and increase sales by increasing the density of products on the shelves.

[0009] Of course, the size of a storage case may depend on the products that it stores. Today's software products often include more than recording media, e.g., up to three or more CD-ROMs, on which computer readable software instructions are stored, and associated literature such as a user manual, warranty information etc. The associated literature also tends to be thick and bulky. Thus, it is necessary to have a storage case that can accommodate a plurality of recording media and associated literature, even if bulky.

[0010] It is, therefore, desirable to have a storage case that can accommodate software products that is as small as possible to increase the density of products on the retail floor.

SUMMARY OF THE INVENTION

[0011] It is an object of the present invention to provide a storage case that is reduced in size compared to conventional packages.

[0012] It is another object of the invention to provide a storage case that is more secure so that it may be displayed on the retail floor without theft.

[0013] A storage case according to the present invention can store recording media, such as CD-ROMs, and includes an enclosure which may receive literature even if bulky that is related to the media which is stored therein such as a user manual, warranty information etc.

[0014] A storage case according to the present invention also includes security features that retard theft.

[0015] In a preferred embodiment, a storage case according to the present invention utilizes locking systems which have been described in copending U.S. patent application Ser. No. 09/696,614 entitled "Case and Lock with Improved Disc Protection", filed on Oct. 25, 2000, and U.S. patent application Ser. No. 09/858,457 entitled "Case With Internal Lock", filed May 6, 2001, the entire disclosures of which are incorporated by reference herein. Such locking systems are highly secure and space efficient. Also, such locking systems can be equipped with tags- which may be readable by sensors to prevent theft.

[0016] A storage case according to the present invention includes a hub or retainer member for holding conventional recording media such as CD-ROMs, and a biasing element which assists in securing the media in place when received by the retainer. The biasing element helps to reduce the size of the storage case because it provides the ability to secure more than one recording media on the retainer.

[0017] A preferred embodiment of a storage case according to the present invention includes a first cover; a second cover; a spine flexibly attached at opposing edges thereof to an edge of the first cover and an edge of the second cover respectively; and a recording media retainer adapted to receive at least one recording media, the retainer being disposed on a major surface of the first cover.

[0018] According to one aspect of the invention an enclosure is provided on the second cover to receive literature. A brace is disposed over the enclosure to further secure the literature received therein. According to one aspect of the invention the brace includes a portion that is parallel to the second cover and another portion that extends from the first portion at an angle so that literature may be inserted between the brace and the second cover more easily.

[0019] According to another aspect of the invention, the brace is raised sufficiently high above the second cover to receive and retain bulky or thick literature therein.

[0020] According to another aspect of the invention the storage case includes a biasing element which is oriented opposite to a major surface of the first cover and makes contact with a recording media held by the retainer to hinder the motion of the same when the storage case is closed. The biasing element may be a spring and may be disposed over the brace, if one is provided.

[0021] According to another aspect of the invention another biasing element, which may also be a spring, can be

provided. The second biasing element may be spaced from the first biasing element at a distance that is at least as wide as the diameter of the central opening of a conventional recording media. The two biasing elements will be positioned so that the recording media retainer will be disposed between them when the storage case is closed.

[0022] Other features and advantages of the present invention will become apparent from the following description of the invention which refers to the accompanying drawings.

BRIEF DESCRIPTION OF THE DRAWINGS

[0023] **FIG. 1** shows a bottom plan view of a conventional recording media.

[0024] **FIG. 2** shows a perspective view of the interior of a storage case according to the present invention.

[0025] **FIG. 3** shows a perspective view of a retainer for retaining a conventional recording media.

[0026] **FIG. 4** shows a perspective view of the exterior of a storage case according to the present invention.

[0027] **FIG. 5** shows another perspective view of the interior of a storage case according to the present invention showing literature as received within the storage case.

DETAILED DESCRIPTION OF EMBODIMENTS OF THE INVENTION

[0028] **FIG. 1** shows a bottom view of a recording media **10** according to a conventional design. According to the conventional design, recording media **10** is circular and has a circular central opening **12**. Typically, a concentric ring **14** is disposed around opening **12**. Concentric ring **14** is usually devoid of any optically readable information. Optically readable information storage media such as compact disks (CDs), CD-ROMs and DVDs are examples of such recording media, although it should be realized by those skilled in the art that the storage case of the present invention can be used with any and all types of recording media. As is well known, CD-ROMs are used for storage of computer readable information and/or computer readable instructions (software). When sold, software is often accompanied with literature pertaining to, for example, the use of software, or other literature such as warranty information.

[0029] **FIG. 2** shows a software storage case **16** according to the present invention. Software storage case **16** includes first cover **18** and second cover **20**, and spine **22** which is flexibly attached at opposing longitudinal edges thereof to an edge of first cover **18** and an edge of second cover **20**, respectively. Due to the flexible attachment, first cover **18** may pivot toward second cover **20**, and second cover **20** may pivot toward first cover **18**. Thus, the flexible attachment of spine **22** to first cover **18** acts as a hinge between spine **22** and first cover **18** and the flexible attachment of spine **22** to second cover **18** acts as a hinge between spine **22** and second cover **20**. This arrangement is commonly referred to as a living hinge.

[0030] First cover **18** has disposed on a surface thereof a hub or recording media retainer **24**. Recording media retainer **24** may be adapted to receive one or more recording media as desired. Preferably, retainer **24** is adapted to receive three recording media as schematically suggested in **FIG. 5**, although it can be adapted to hold more than three.

[0031] **FIG. 3** shows an enlarged view of retainer **24**. Referring to **FIG. 3**, retainer **24** includes a plurality of spaced tabs **26**. Tabs **26** are arranged around a circle having a diameter that is substantially equal to the diameter of central opening **12 (FIG. 1)** of a conventional recording media **10 (FIG. 1)**. Each tab **26** includes an enlarged free end **28** and an opposing end which is attached to first cover **18**. Each enlarged end **28** includes a curved exterior surface. To utilize recording media retainer **24**, central opening **12** of a conventional recording media **10** is substantially aligned with tabs **26**. When conventional recording media **10** is forced downwardly toward first cover **18**, each tab **26** is elastically deformed thereby allowing its respective free end to slip into opening **12 (FIG. 1)** of conventional recording media **10**. Once recording media **10** is moved further toward first cover **18** past enlarged free ends **28** of tabs **26**, tabs **26** automatically return to their undeformed positions and make contact with the annular wall **12'(FIG. 1)** of opening **12** and due to friction, retain recording media **10** in a position substantially parallel to first cover **18**.

[0032] Cylinder **30** may be disposed on first cover **18** and within the space created by tabs **26**. Cylinder **30** is spaced from tabs **26** to allow adequate room for each tab **26** to be deformed when recording media **10** is being received by recording media retainer **24**. However, cylinder **30** is close enough so as not to allow tabs **26** to be deformed too far inwardly to prevent breakage or permanent deformation of tabs **26**.

[0033] Referring to **FIGS. 2 and 3**, an annular ring **32** is disposed on first cover **18** and about recording media retainer **24**. Annular ring **32** has a diameter which is preferably more than the diameter of opening **12** and less than the diameter of concentric ring **14** of a conventional recording media **10 (FIG. 1)**, and rises to a height so as to space the bottom of recording media **10** that is received by retainer **24** from first cover **18**. Because the diameter of annular ring **32** is smaller than the diameter of concentric ring **14 (FIG. 1)** of recording media **10**, annular ring **32** will not make contact with those portions of recording media **10** that contain optically readable information, which portions are typically outside of concentric ring **14 (FIG. 1)**.

[0034] Referring to **FIG. 2, a** plurality of spaced arcuate walls **34** are disposed on first cover **18** and about recording media retainer **24**. Arcuate walls **34** are arranged around a circle having a slightly larger diameter than the diameter of recording media **10 (FIG. 10)**. Arcuate walls **34** rise to about the height of recording media retainer **24**. Once a recording media **10** is received by recording media retainer **24**, arcuate walls **34** hinder its lateral movement thereby contributing to its secured retention.

[0035] Disposed between arcuate walls **34** and on first cover **18** are a plurality of raised portions **36**. Raised portions **36** rise to a height below the height of arcuate walls **34** and equal to or slightly below the height of annular ring **32**. Raised portions **36** may make contact with the outer edge of recording media **10 (FIG. 1)** when it is received by retainer **24**. Such contact may occur, for example, when recording media **10 (FIG. 1)** that is received by recording media retainer **24** is removed.

[0036] A recording media **10** may be removed by two opposing fingers of a user placed at opposing regions on the outer edge of a recording media **10 (FIG. 1)** that is received

by recording media retainer **24**. The downward pressure applied to the retained recording media **10** during this procedure may cause a slight deformation of recording media **10**, as it may be pressed against annular ring **32**. Raised portions **36** prevent recording media **10** (**FIG. 1**) from being pressed too far downwardly, thereby averting accidental breakage of recording media **10** during its removal.

[**0037**] Storage case **16** may utilize a locking mechanism that is described in detail in copending U.S. application Ser. No. 09/858,457 described above. For convenience, a brief description of the locking mechanism follows. As described above, first cover **18** is flexibly attached at a proximal edge **19** thereof to spine **22**, while second cover **20** is flexibly attached at a proximal edge **21** thereof to spine **22**. First cover **18** has disposed opposite and parallel to its proximal edge a pair of spaced parallel walls **38**, **40**. Similarly, a pair of spaced parallel walls **42**, **44** are disposed on second cover **20** opposite and parallel to its proximal edge. A plurality of spaced loops **46** are disposed between spaced parallel walls **42**, **44** on the second cover. Also, a plurality of spaced loops **48** are disposed between spaced parallel walls **38**, **40** on first cover **18**. Loops **46**, which are disposed between spaced parallel walls **42**, **44** on second cover **20**, are longitudinally aligned with one another. The longitudinal positions of the loops **46** and **48** are different such that the loops **46** have a staggered relationship with respect to the loops **48** and loops **48** which are disposed between spaced parallel walls **38**, **40** on first cover **18** are aligned with one another. The longitudinal positions of the loops **46** and **48** are different such that the loops **46** have a staggered relationship with respect to the loops **48**. When software storage case **16** is closed, that is, when first cover **18** and second cover **20** are brought close to one another, loops **48** which are disposed between spaced parallel walls **38**, **40** will be positioned between the loops **46** which are disposed between spaced parallel walls **42**, **44** and vice versa to provide a free path **45** (**FIG. 4**). A locking member comprising a substantially straight bar **47** (**FIG. 4**) is then received in free path **45** by each loop **46**, **48** to secure the first cover and the second cover to one another.

[**0038**] First cover **18** has disposed thereon a pair of opposing vertical walls **50**, **52**, which are disposed adjacent to its proximal edge **19**. Opposing vertical walls **50**, **52** each have an extended portion **50***a*, **52***a*. Second cover **20** also has disposed thereon a pair of opposing vertical walls **54**, **56** which are adjacent to its proximal edge **21**. The respective extended portions **50***a*, **50***b* of opposing vertical walls **50**, **52**, on first cover **18** are spaced apart slightly further than opposing vertical walls **54**, **56** so that when software storage case **16** is closed extended portions **50***a*, **52***a* of opposing vertical walls **50**, **52** will be positioned outside opposing vertical walls **54**, **56** of second cover **20** respectively as shown schematically in **FIG. 4**. This arrangement improves the security of software storage case **16** by providing a double-wall structure that makes it more difficult to compromise software storage case **16**, by, for example, prying it open to gain access to its contents. Optionally, filler layers **58** may be provided on exterior portions of opposing vertical walls **54**, **56** of second cover **20** to cover those portions of the exterior of opposing vertical walls **54**, **56** which are not covered by extended portions **50***a*, **52***a* of respective opposing vertical walls **50**, **52**. These and other security features are described in more detail in copending U.S. application Ser. No. 09/696,614 described above.

[**0039**] The innermost one **42** of spaced parallel walls **42**, **44** and opposing vertical walls **54**, **56** create an enclosure that can receive literature, such as a booklet or other written material such as warranty material, etc. An opening **59** in second cover **20** serves as a window which may be used to display portions of literature that is received in the literature enclosure. Optionally, a short wall **57** may be disposed on second cover **20** near and parallel to its proximal edge **21**. Short wall **57**, when provided, will further restrict the lateral movement of any literature received in the enclosure that is created by opposing vertical walls **54**, **56** and innermost one **42** of spaced parallel walls **42**, **44**. First cover **18** also has disposed near its proximal edge a short vertical wall **51**. Short wall **51** ensures that first cover **18** will not pivot beyond a vertical position relative to spine **22**. The same function is substantially performed by short wall **57** of second cover **20**. Thus, when software storage case **16** is closed, first cover **18** and second cover **20** will be oriented substantially vertical to spine **22**, and thus parallel to one another as first cover **18** is pivoted about is proximal edge **19** when, for example, software storage case **16** is closed.

[**0040**] According to an aspect of the present invention, brace **60** is provided over the literature enclosure. Brace **60** extends between opposing vertical walls **54**, **56** of second cover **20**. Brace **60**, preferably includes first portion **60***a* which is substantially parallel to second cover **20** and a second portion **60***b* which slopes at an angle away from second cover **20** thereby providing a wide opening for receiving literature in the literature enclosure. **FIG. 5** shows software storage package **16** which has received in its literature enclosure an item of literature. Preferably, brace **60** is configured to receive thick or bulky literature that is at least ½" thick. Also, preferably software storage package **16** meets the size requirements recommended by IEMA (Interactive Entertainment Merchants Association) for a downsized software storage case. The IEMA recommended dimensions are 7½" by **5¼" by** 1⅛".

[**0041**] According to another aspect of the present invention, at least one biasing element (e.g. **62**, **64**) is provided to make contact with at least one recording media, and preferably up to three, that is retained by recording media retainer **24** when software storage package **16** is closed. To make contact with a recording media retained on recording media retainer **24**, biasing element (e.g. **62**, **64**) is oriented in a direction opposite to first cover **18** when software storage case **16** is closed. Biasing elements **62**, **64** in the preferred embodiment of the invention are springs and biased towards the recording media when storage case **16** is closed. The biasing elements **62**, **64** should be sufficiently biased to securely hold from one to three or more recording media on retainer **24** when case **16** is closed. Preferably, biasing elements **62**, **64** are sufficiently resilient and contact the recording media on the unrecorded portion, thereby preventing damage to the recording media.

[**0042**] In a preferred embodiment, biasing elements **62**, **64** are spaced at least as wide as the diameter of central opening **14** of a conventional recording media **10** (**FIG. 1**). Also, according to an aspect of the invention, biasing elements **62**, **64** are disposed on brace **60**. In the preferred embodiment of the invention, recording media retainer **24** will be disposed between biasing elements **62**, **64** when software storage case **16** is closed, thus providing biasing force evenly over a recording media retained by recording media retainer **24**.

[0043] A software case according to a preferred embodiment is made from an environmentally friendly recyclable polypropylene copolymer and is 7½" by 4¼" by ½" when closed. A preferred embodiment of the present invention is thus smaller than conventional packages, which saves retail space thus allowing retailers to display up to three times more products on the shelves. A software case according to the preferred embodiment can accommodate a booklet that is 6¾" by 4¼" by ½" up to a booklet that is 7 1/16" by 4½" by ½".

[0044] A package according to the present invention is advantageous in that it: conforms to the size standards set by IEMA and their retailers; provides customers with compact and permanent storage cases which are easy to use as opposed to boxes which are discarded after use; provides customers with environmentally friendly packaging as it is made from recyclable material and it is capable of being reused to package other products when it is returned; includes a reusable lock which further makes it environmentally friendly; and furthers energy efficiency in that it can be produced by low energy injection molding.

[0045] Preferably, a software case according to a preferred embodiment of the present invention can have a clear sleeve disposed on its exterior to receive graphic inserts that can be 11 1/16" by 7 9/32".

[0046] A software case according to the present invention lends itself easily to packaging automation such as the packaging automation used for the packaging of DVDs in which the graphic insert and the recording media are first automatically inserted into the case and then the booklets are inserted in a semi-automatic station.

[0047] A software case according to a preferred embodiment of the present invention utilizes: an internal lock system with double acting catches that makes the case smaller; internal double overlapping walls which hinders theft by spreading the case apart; and a stronger body and particularly a reinforced spine which makes it more difficult to compromise the case by cutting it. The lock used in the preferred embodiment can have security tags placed thereon or can accommodate coil technology.

[0048] Although the present invention has been described in relation to particular embodiments thereof, many other variations and modifications and other uses will become apparent to those skilled in the art. It is preferred, therefore, that the present invention be limited not by the specific disclosure herein, but only by the appended claims.

What is claimed is:

1. A storage case comprising:

a first cover;

a second cover, said first and second covers being relatively movable between an open position and a closed position;

a recording media retainer adapted to receive at least one recording media when said first and second covers are in the open position, said recording media retainer being disposed on a major surface of said first cover; and

a biasing element for making contact with a recording media retained by said recording media retainer to hinder the motion of the same when said first and second covers are in the closed position.

2. A storage case according to claim 1, further comprising an enclosure for receiving literature.

3. A storage case according to claim 2, wherein said enclosure is disposed on said second cover.

4. A storage case according to claim 2, further comprising a brace disposed over said enclosure, wherein literature is received between said brace and said second cover.

5. A storage case according to claim 4, wherein said brace includes a first portion that is substantially parallel to a major surface of said second cover and a second portion that extends at an angle away from said first portion.

6. A storage case according to claim 4, wherein said biasing element is disposed on said brace.

7. A storage case according to claim 1, wherein said biasing element comprises a spring.

8. A storage case according to claim 1, further comprising another biasing element, said biasing element being spaced at least as wide as the diameter of the central opening of a conventional recording media.

9. A storage case according to claim 8, wherein said recording media retainer will be disposed between said springs when said first and second covers are in the closed position.

10. A storage case according to claim 2, wherein said enclosure comprises a plurality of walls each parallel to an edge of said second cover and extending perpendicular from a major surface thereof.

11. A storage case according to claim 1, further comprising a spine flexibly attached at opposing edges thereof to an edge of said cover and an edge of said second cover, respectively.

12. A storage device according to claim 11, wherein each of said first cover and said second cover is flexibly connected to said spine at a proximal edge thereof, and wherein each cover includes a pair of spaced vertical walls positioned parallel to a distal edge thereof, further comprising a plurality of spaced loops disposed between each pair of said spaced walls, each loop having an opening, wherein said loops are arranged so that their respective openings register with one another when said first and second covers are in the closed position to provide a free path for receiving a locking member.

13. A storage case according to claim 12, wherein said first cover includes a pair of opposing vertical walls extending parallel to edges adjacent to said proximal edge thereof, and said second cover includes a pair of opposing vertical walls extending parallel to edges adjacent to said proximal edge thereof, said pair of opposing walls of said first cover being spaced wider than said pair of opposing walls of said second cover so that when said first and second covers are in the closed position said pair of opposing walls on said first cover receive said pair of opposing walls of said second cover.

14. A storage case according to claim 1, wherein said recording media retainer comprises a plurality of tabs arranged around a circle having a diameter that is substantially equal to the diameter of the central opening of a recording media.

15. A storage case according to claim 14, wherein each of said tabs includes an enlarged free end having a curved exterior, and wherein each tab is flexibly attached to said first cover.

16. A storage case according to claim 14, further comprising an annular ring disposed around said recording media retainer and extending from said first cover.

17. A storage case according to claim 14, further comprising a plurality of spaced arcuate walls disposed about said recording media retainer, said walls being arranged about a circle having a diameter that is larger than the diameter of a recording media.

18. A storage case according to claim 17, further comprising raised portions disposed between said spaced vertical arcuate walls, said raised portions extending from said first cover to a height that is lower than a height of said spaced arcuate walls.

19. A storage case according to claim 1, wherein said second cover includes an opening that serves as a window into an interior of said recording media storage device.

20. A storage case comprising:

a first cover;

a second cover, said first and second covers being relatively movable between an open position and a closed position;

a recording media retainer adapted to receive at least one recording media when said first and second covers are in the open position and said recording media having a central opening, said recording media retainer being disposed on a major surface of said first cover;

an enclosure disposed on said second cover for receiving literature; and

a brace disposed over said enclosure to hinder the movement of literature received in said enclosure.

21. A storage case according to claim 20, wherein said brace includes a first portion that is substantially parallel to a major surface of said second cover and a second portion that extends at an angle away from said first portion.

22. A storage device according to claim 20, wherein said enclosure comprises of a plurality of walls each parallel to an edge of said second cover and extending perpendicular from a major surface thereof.

23. A storage case according to claim 19, further comprising a spine flexibly attached at opposing edges thereof to an edge of said cover and an edge of said second cover, respectively.

24. A storage device according to claim 23, wherein each of said first cover and said second cover is flexibly connected to said spine at a proximal edge thereof, and wherein each cover includes a pair of spaced vertical walls positioned parallel to a distal edge thereof, further comprising a plurality of spaced loops disposed between each pair of said spaced walls, wherein said loops are arranged so that their respective openings register with one another when said first and second covers are in the closed position to provide a free path for receiving a locking member.

25. A storage case according to claim 24, wherein said first cover includes a pair of opposing vertical walls extending parallel to edges adjacent to said proximal edge thereof, and said second cover includes a pair of opposing vertical walls extending parallel to edges adjacent to said proximal edge thereof, said pair of opposing walls of said first cover being spaced wider than said pair of opposing walls of said second cover so that when said first and second covers are in the closed position said pair of opposing walls on said first cover receive said pair of opposing walls of said second cover.

26. A storage case according to claim 20, wherein said recording media retainer comprises a plurality of tabs arranged around a circle having a diameter that is substantially equal to the diameter of the central opening of a recording media.

27. A storage case according to claim 26, wherein each of said tabs includes an enlarged free end having a curved exterior surface, and wherein each tab is flexibly attached to said first cover.

28. A storage case according to claim 26, further comprising an annular ring disposed around said recording media retainer and extending from said first cover.

29. A storage case according to claim 26, further comprising a plurality of spaced arcuate walls disposed about said recording media retainer, said walls being arranged about a circle having a diameter that is larger than the diameter of a recording media.

30. A storage case according to claim 29, further comprising raised portions disposed between said spaced vertical arcuate walls, said raised portions extending from said first cover to a height that is lower than a height of said spaced arcuate walls.

31. A storage case according to claim 20, wherein said second cover includes an opening that serves as a window into an interior of said recording media storage device.

32. A storage case according to claim 20, further comprising a biasing element, wherein said biasing element is oriented opposite to said major surface of said first cover and makes contact with a recording media retained by said recording media retainer to hinder the motion of the same when said first and second covers are in the closed position.

33. A storage case according to claim 32, wherein said biasing element is disposed on said brace.

34. A storage case according to claim 33, wherein said biasing element comprises a spring.

35. A storage case according to claim 32, further comprising another biasing element, said biasing element being spaced at least as wide as the diameter of the central opening of a conventional recording media.

36. A storage case according to claim 35, wherein said recording media retainer will be disposed between said springs when said first and second covers are in the closed position.

37. A storage case according to claim 20, wherein said brace is structured and arranged to hold literature that is at least about one-half inch thick.

* * * * *