A. DE GEOFROY.

FLUID PRESSURE MOTOR.

APPLICATION FILED MAR. 18, 1912.

1,057,233.

Patented Mar. 25, 1913.

3 SHEETS—SHEET 1.

Fig. 1.

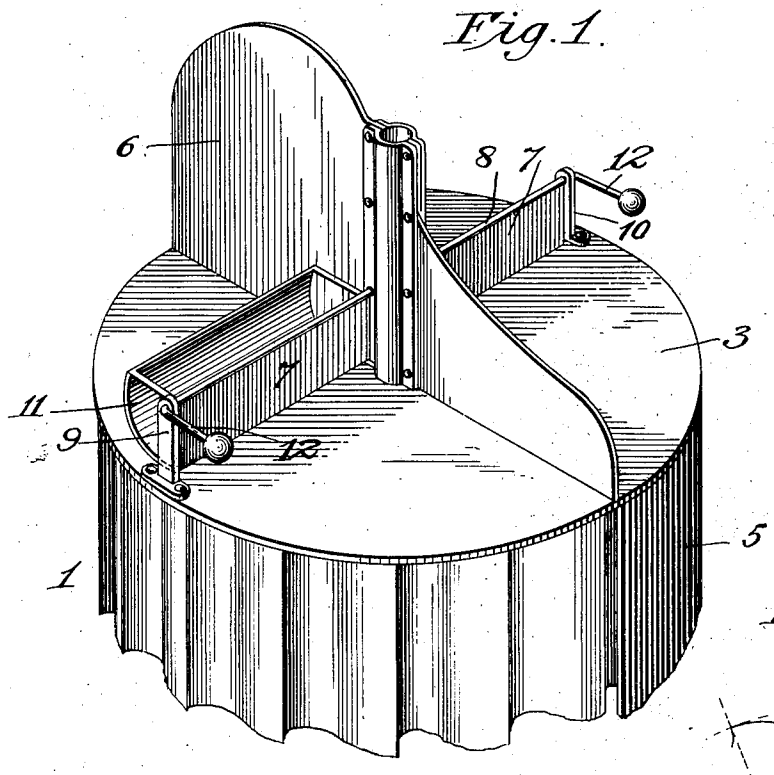

Fig. 5

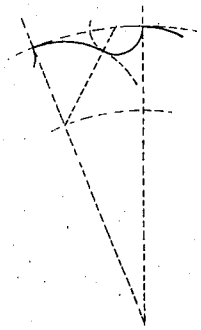

Fig. 2.

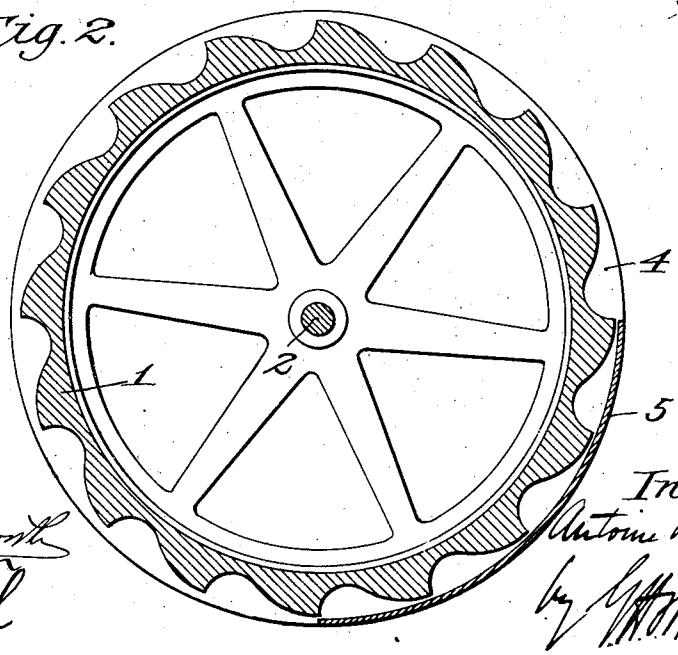

Witnesses:

S. P. Collingwood

C. B. Dull

Inventor:

Antoine de Geofroy,

by W. W. Howard

Atty.

A. DE GEOFROY.

FLUID PRESSURE MOTOR.

APPLICATION FILED MAR. 18, 1912.

1,057,233. Patented Mar. 25, 1913.

3 SHEETS—SHEET 2.

Fig. 3

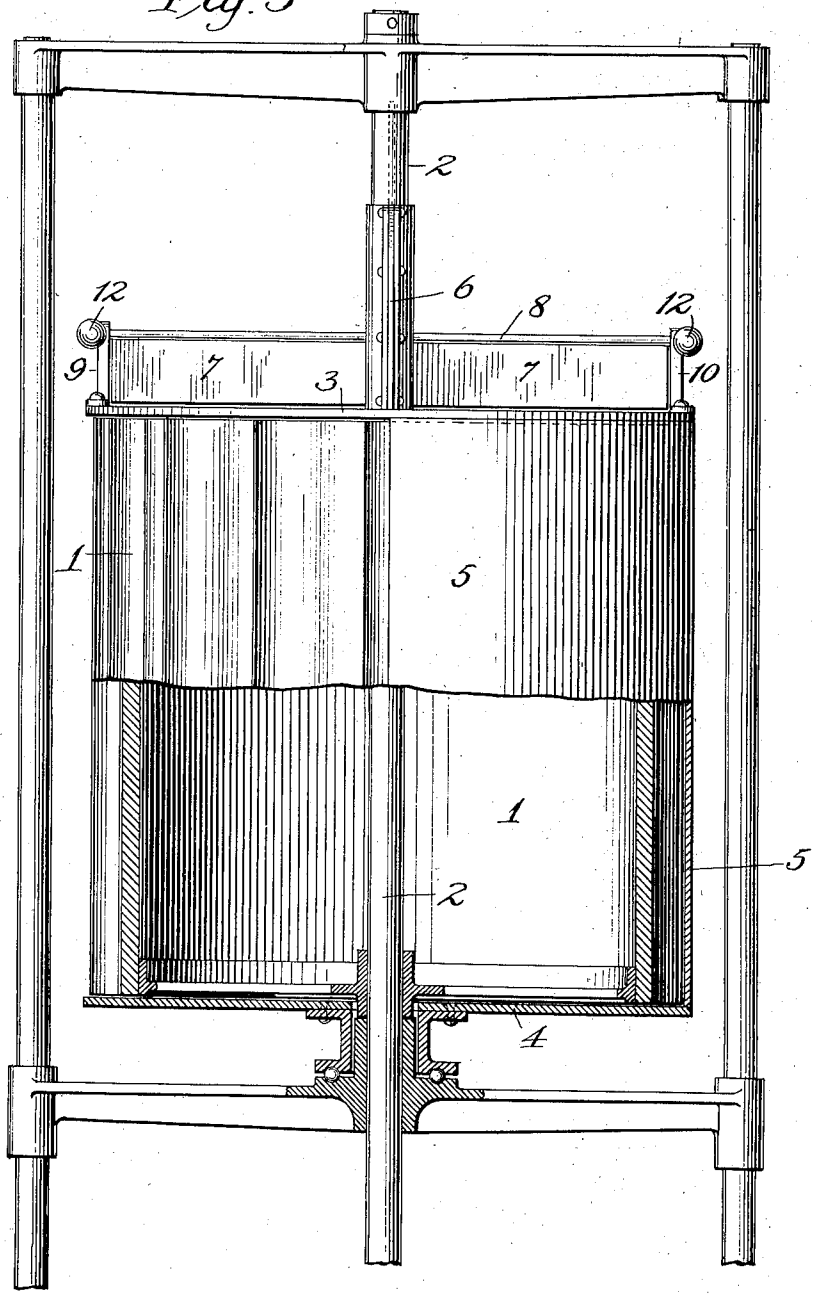

Witnesses:
C. B. Dull

Inventor:
Antoine de Geofroy,
by
Attorney

A. DE GEOFROY.

FLUID PRESSURE MOTOR.

APPLICATION FILED MAR. 18, 1912.

1,057,233. Patented Mar. 25, 1913.

3 SHEETS—SHEET 3.

Fig. 4.

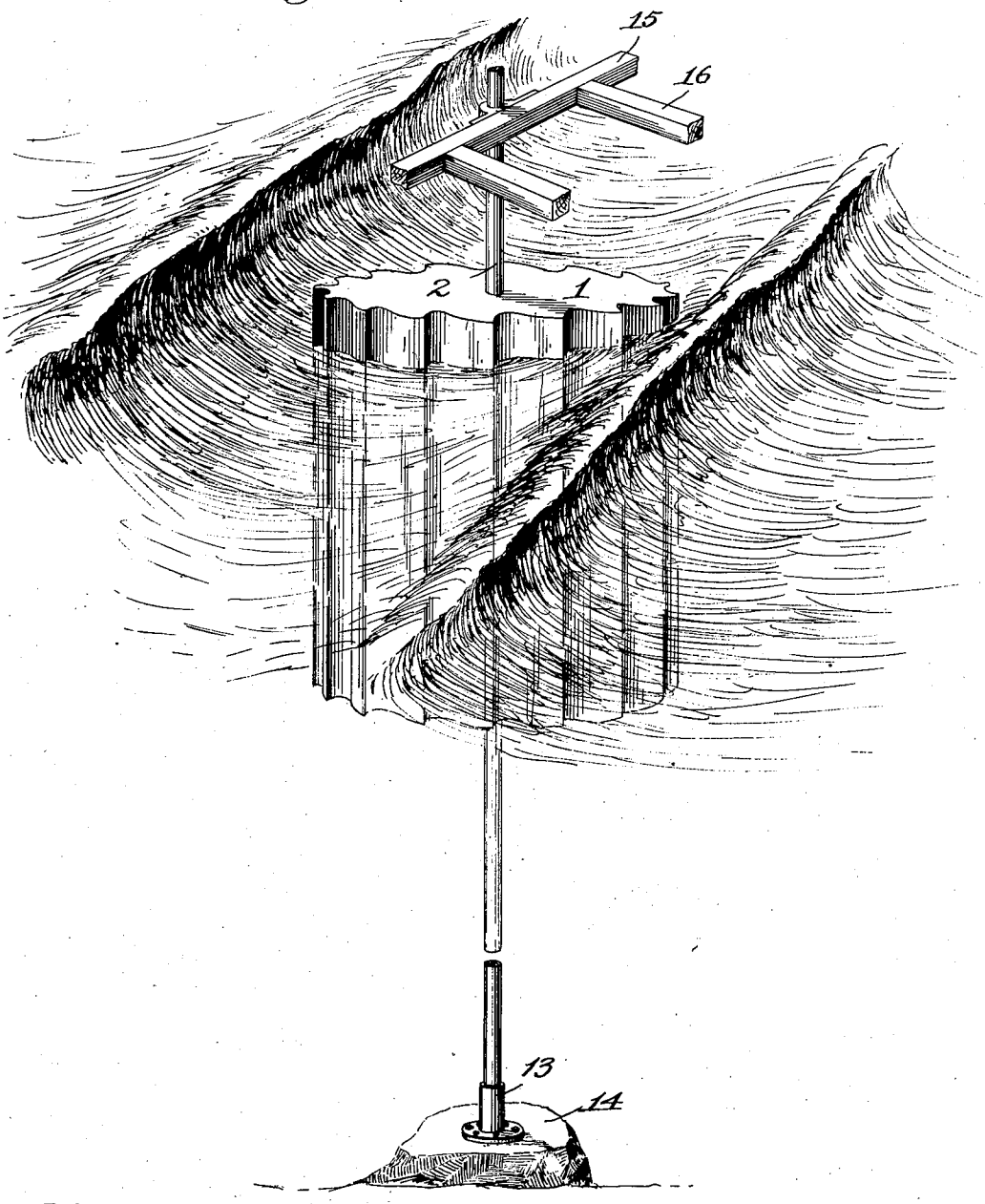

Witnesses;

C. F. Bull

A. P. Hollingsworth

Inventor:

Antoine de Geofroy,

by W. T. Thomas,

Atty.

UNITED STATES PATENT OFFICE.

ANTOINE DE GEOFROY, OF PARIS, FRANCE.

FLUID-PRESSURE MOTOR.

1,057,233. Specification of Letters Patent. Patented Mar. 25, 1913.

Application filed March 18, 1912. Serial No. 684,418.

To all whom it may concern:

Be it known that I, ANTOINE DE GEOFROY, a citizen of the Republic of France, residing at Paris, France, have invented new and useful Improvements in Fluid-Pressure Motors, of which the following is a specification.

My invention relates to a motor designed to be operated by any moving fluid, and consists in the features and combinations hereinafter described and more specifically pointed out in the claims.

In the accompanying drawings,—Figure 1 is a perspective view of an upper part of my invention. Fig. 2 is a transverse section on a line which may be at the longitudinal center of the motor, and Fig. 3 is a vertical elevation mainly in section. Fig. 4 shows a modification, and Fig. 5 a diagram hereinafter described.

I provide a drum 1 of wood, iron or other suitable material adapted to revolve upon a vertical axis or shaft 2. The drum is furnished at its periphery with a continuous series of what may be termed S-shaped curves formed preferably so that a cross section of the drum will be bounded by segments of circles of unequal radii and tangential at their points of meeting. The center from which each smaller segment is described is on the line of the outer circumference of the drum, said segment beginning thereon and being continued inward a little beyond one quarter of its full circle to a point at which it becomes one with or is lost in the curvature of its adjacent larger segment. The center of this larger segment is at such point that the curve at its starting point is made tangential to the outer circumference of the drum and at its other end to the meeting end of the smaller segment, the respective curvatures of the two segments uniting. The most desirable proportions between the respective radii of the S-shaped curves, as well as the most effective number of curves or depressions on the peripheral surface of the drum 1, are to be determined by circumstances, the conditions under which the motor is to be used, and the motive fluid employed. The curved or indented perimeter of the drum constitutes a series of vanes, blades or buckets upon which the fluid acts, and the preferred disposition of the radii of the segments entering into the S-shaped curve is shown in the diagram Fig. 5.

Mounted to rotate on the axis 2, but independently of the movement of the drum 1, are disks 3, 4, one above the other, the disks being separated a distance practically equal to the extreme length of the drum. The disks 3 and 4 are connected by a shield 5 in the form of a segment of about one sixth or one fourth of the perimeter of the disks. The object of this segmental shield is to protect the non-working surface of the drum from the retarding action of the fluid and to allow the active surface or the exposed blades, vanes or buckets to produce maximum effect. On the top of the upper disk 3 is a vertically disposed vane 6 the object of which by rotating the connected disks is to keep the shield 5 in such position as to prevent the wind from striking non-operative surfaces of the drum. At a right angle to the vane 6 are devices for causing it to deflect slightly from the direction of maximum efficiency in case the wind or other motive force should come too strongly for the motor. The said devices include two metallic plates 7, one placed at each side of the vane 6. These plates hang from a transverse rod 8 (passing through the vane 6) to which they are rigidly secured, the rod being journaled in posts 9 and 10. The position of the plates 7 is controlled by the force of the fluid acting upon them. One of these plates has behind it a curved plate 11 shaped as a hollow quarter-cylinder and which, as the confronting plate 7 is moved, is turned up presenting a curved surface to the force of the wind, thus destroying the balance of the apparatus and causing the required deflection. The plates 7 are balanced by means of the weighted arms 12 secured to the rod 8.

I do not limit my invention to the utilization of wind power alone. The drum may be caused to rotate by the impact of currents of steam or water by making it the moving

part of a steam or water turbine inclosed in a fixed casing with apertures for the ingress and egress of either of the above named fluids.

In Fig. 4 I show the drum 1 made of metal and caused to be watertight, immersed as in the ocean at a point near the land, and adapted to be rotated by the movement of the water. The perimeter of the drum is formed in the manner hereinbefore described and preferably under the disposition of radii shown in the diagram Fig. 5. The lower end of the axis or shaft 2 of the drum may be supported in a socket or pedestal 13 secured to a bed of rock 14 or to an artificial foundation, and the upper end journaled in a suitable framework 15 and 16, such as is shown with respect to other uses. The upper end of the shaft may be extended and carry such gearing or other parts as may be required to transmit power to the machinery to be driven.

It will be seen that the working surface of the drum is constituted of what may be termed a series of blades each so shaped that it shall receive the unobstructed and full impact of the wind, and at the proper time admit of the free delivery thereof from contact with it. This is permitted by reason of the fact that, as shown for example in Fig. 2, the perimeter of the drum has a series of corresponding formations each constructed of two curves, one being of greater radius than the other and so united that when the drum has reached, or is about to pass, the horizontal center line, the wind unobstructedly does its work and thereafter is at once relieved from contact with the drum without retarding effect thereon. There is no reaction of the fluid upon the drum, this being in great measure prevented by the presence of the shield 5. As seen, the curves of the shorter radius meet those of the longer radius without the intervention of anything in the nature of a lip, projection or other element obstructive to the free delivery of the wind at such intersection. The outer end of the shorter curve intersects the outer end of the curve of greater radius at, or nearly at, a right angle. These features are of the highest importance.

The shield 5 serves the purpose of steadying and preventing a retardation of the drum in its rotation by reaction or other cause. The shield should be as close as practicable to the perimeter of the drum. The shield is calculated to act in connection with the peculiar formation given to the perimeter of the drum. This calculation includes not only the extent, width and location of the shield, but also its proximity to the perimeter of the drum, and it coaction with the perimeter of the latter consequent upon the rotation of the disks 3 and 4 which effect the movement of the shield, but are independent of the movement of the drum. The disks 3 and 4 coact not only with the shield but also with the vane 6 and the drum whereby the action of the wind upon the exposed surface of the perimeter of the drum is suitably regulated. It will thus be seen that each element of the whole device is constructed, arranged and specially designed to coact with its fellow elements.

The device if used as a water motor will not require the movable shield and regulator described as applied to a wind motor and which, while there not indispensable, increase its efficiency and regularity of action. Furthermore, the drum may be caused to revolve horizontally or vertically under the action of falling water to generate electricity, drive machinery, etc.

It will be understood that in all uses of my invention as herein shown the drum is secured to the shaft so as to cause the rotation of the latter as a power transmitting medium for uses in the various arts.

I claim:—

1. In a fluid pressure motor, a rotatable drum the perimeter of which is furnished with a series of longitudinal S-shaped curves formed of segments of circles of unequal radii and tangential at their points of meeting and intersecting at their outer ends substantially at a right angle, combined with a suitably supported axis or shaft with which the drum rotates, a disk axially mounted at each end of said drum, and a segmental shield connecting said disks and conforming in shape to their perimeter and confronting certain of the S-shaped curves of the drum, said disks and the shield rotating on the axis independently of the shaft and drum, substantially as set forth.

2. In a fluid pressure motor, a rotatable drum the perimeter of which is furnished and confronting certatin of the S-shaped curves formed of segments of circles of unequal radii and tangential at their points of meeting and intersecting at their outer ends substantially at a right angle, combined with a suitably supported axis or shaft with which the drum rotates, a disk axially mounted at each end of said drum, a segmental shield connecting said disks and conforming in shape to the perimeter thereof and confronting certain of the S-shaped curves of the drum, said disks and shield rotating on the axis or shaft independently of the shaft and drum, and a vertically disposed vane rigid with the upper disk for keeping the shield in position to protect the non-operative surface of the drum, substantially as set forth.

3. In a fluid pressure motor, a tight rotatable drum the perimeter of which is furnished with a series of longitudinal S-

shaped curves formed of segments of circles of unequal radii and tangential at their points of meeting and intersecting at their outer ends substantially at a right angle, combined with a power transmitting shaft to which the drum is secured, and suitable supports in which the shaft is adapted to revolve, substantially as set forth.

In testimony whereof I affix my signature in presence of two witnesses.

ANTOINE DE GEOFROY.

Witnesses:
C. B. BULL,
CHARLES LOWELL HOWARD.