United States Patent

[11] 3,634,877

[72] Inventors **Richard L. Cannon; Leonard R. D. Smith, both of Yankton, S. Dak.**

[21] Appl. No. **31,556**
[22] Filed **Apr. 24, 1970**
[45] Patented **Jan. 11, 1972**
[73] Assignee **Dale Electronics, Inc. Columbus, Nebr.**
Continuation-in-part of application Ser. No. 833,066, June 13, 1969, now Patent No. 3,581,254. This application Apr. 24, 1970, Ser. No. 31,556

[54] PLAYER PIANO KEY ACTUATING ASSEMBLY

4 Claims, 4 Drawing Figs.

[52] U.S. Cl. **335/255,** 336/67, 84/107
[51] Int. Cl. **H01f 7/08**
[50] Field of Search 336/67; 335/255, 259; 248/206; 84/107, 246

[56] **References Cited**

UNITED STATES PATENTS

3,426,304 2/1969 Cannon et al. 335/255

Primary Examiner—G. Harris
Attorney—Zarley, McKee & Thomte

ABSTRACT: An assembly for actuating piano-playing means which includes means for mounting solenoid key actuating units on a metallic channel means. The channel means includes a base plate having first and second channel members secured thereto in a spaced apart relationship. Third and fourth channel members are secured to the first and second channel members, respectively, so that the flanges thereof are spaced apart. The solenoid units have a threaded neck portion which extends from the solenoid body. The neck portion is received between the flanges of the first and third channel members or between the flanges of the second and fourth channel members. A nut assembly is threadably mounted on the neck portion and engages the flanges of the channel members to selectively position the solenoid units with respect to the channel members.

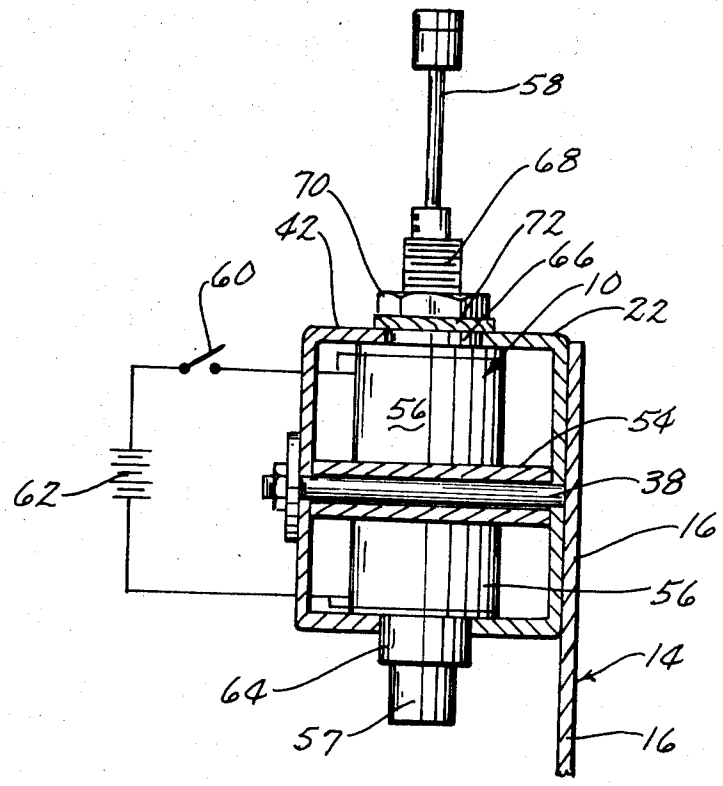

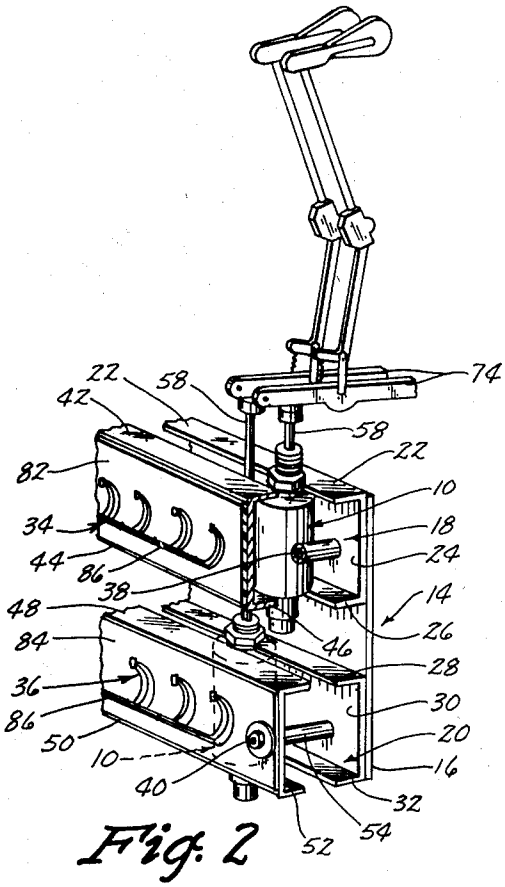

Fig. 2

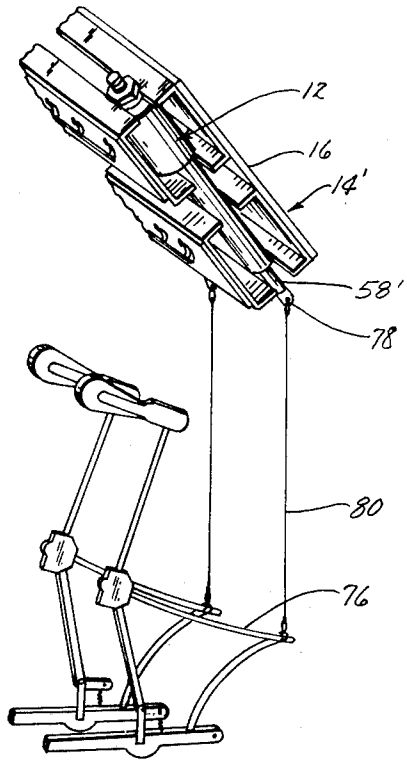

Fig. 4

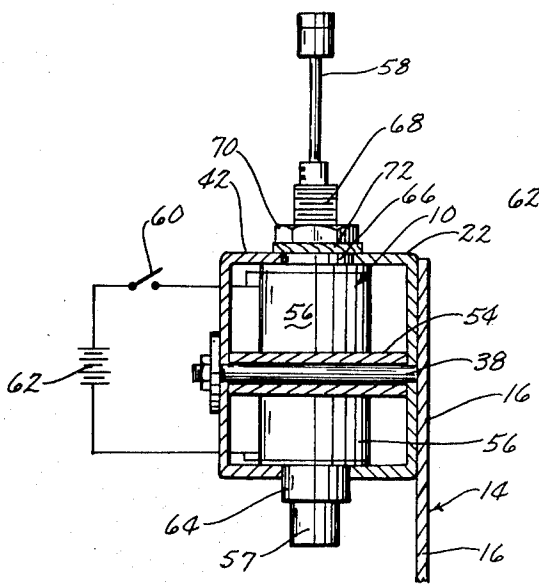

Fig. 1

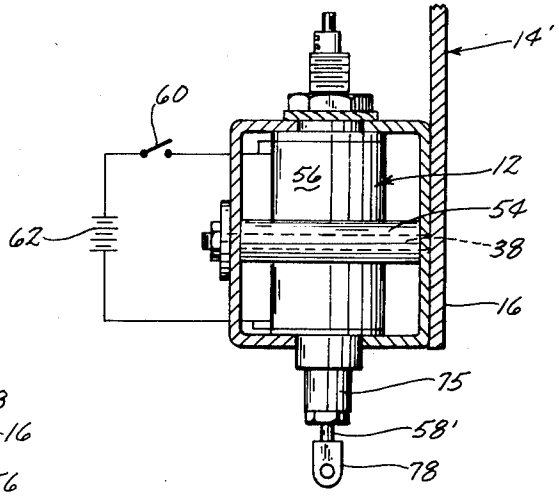

Fig. 3

INVENTORS
RICHARD L. CANNON
LEONARD R. D. SMITH
BY
Zarley, McKee & Thomte
ATTORNEYS

PLAYER PIANO KEY ACTUATING ASSEMBLY

This is a continuation-in-part application of the application Ser. No. 833,066, having a filing date of June 13, 1969, now U.S. Pat. No. 3,581,254. This invention relates to an assembly for actuating piano-playing means and is an improvement over the assembly disclosed in U.S. Pat. No. 3,426,304 which issued on Feb. 4, 1969 wherein one of the applicants herein is listed as a coinventor. This invention is also an improvement over the assembly disclosed in the copending application.

Solenoid assemblies are frequently used to actuate the piano actions of player pianos. Previous solenoid assemblies and the mounting means therefore severely limited their use in various types of piano actions. U.S. Pat. No. 3,426,304 discloses an actuating assembly for a player piano and has been generally satisfactory. However, some difficulty has been experienced in servicing the solenoids and in removing the solenoids from their supports. Further, the instant invention is an improvement over the assembly disclosed in the copending application due to the greater heat dissipation characteristics of the channel means disclosed herein and due to the fact that the instant assembly is more easily manufactured and it is more convenient to adjust the solenoids.

Therefore, it is the principal object of this invention to provide an assembly for actuating player piano means.

A further object of this invention is to provide means for mounting solenoid units on a channel means.

A further object of this invention is to provide means for mounting solenoid units on a channel means to permit the solenoid units to actuate various types of piano actions.

A still further object of this invention is to provide an assembly for actuating player piano means including a solenoid unit wherein the solenoid unit may be easily serviced or removed from its supporting channels.

A still further object of this invention is to provide an assembly for actuating player piano means including a solenoid unit mounted on a channel means which permits the solenoid to be laterally adjusted to a particular piano action regardless of whether it is installed above or below the keyboard, attached to the piano bridle wire, installed under the wipen portion of the piano action or under the piano key itself.

A still further object of this invention is to provide an assembly for actuating piano-playing means including a solenoid unit mounted between a pair of metal channel members wherein the channel members serve as a heat sink and also serve as a frame to complete the magnetic path through the individual solenoid coils.

A still further object of this invention is to provide an assembly for actuating piano-playing means which permits the solenoids to be installed in the piano in "gang" fashion.

A still further object of this invention is to provide an assembly for actuating piano-playing means which is economical to manufacture, and durable in use.

These and other objects will be apparent to those skilled in the art.

This invention consists in the construction, arrangements, and combination of the various parts of the device, whereby the objects contemplated are attained as thereinafter more fully set forth, specifically pointed out in the claims, and illustrated in the accompanying drawings in which:

FIG. 1 is a partial sectional view illustrating one form of the solenoid unit mounted between a pair of opposing channel members, the electrical circuit also being schematically illustrated.

FIG. 2 is a fragmentary perspective view illustrating two solenoid units being mounted on the channel means in a staggered and spaced apart condition.

FIG. 3 is a view similar to FIG. 1 except that the modified form of the solenoid unit is illustrated.

FIG. 4 is a partial perspective view illustrating the solenoid unit of FIG. 3 mounted on the channel means and being connected to the bridle wire of the piano action.

The solenoid units of FIGS. 1 and 2 are generally referred to by the reference numeral 10 while the solenoid units in FIGS. 3 and 4 are generally designated by the reference numeral 12.

The numeral 14 refers generally to a metallic channel means including a base plate 16 having spaced apart channel members 18 and 20 secured thereto by any convenient means such as welding or the like. Channel member 18 includes a top flange 22, base 24 and bottom flange 26. Channel member 20 includes top flange 28, base 30 and bottom flange 32.

Channel members 34 and 36 are secured to channel members 18 and 20 respectively by bolts 38 and 40 as illustrated in FIG. 2. FIG. 2 illustrates one end of the channel members and it should be understood that the other end of the channel members would likewise be secured together with suitable bolts. Channel members 34 includes a top flange 42, base 44 and bottom flange 46 while channel member 36 includes a top flange 48, base 50 and bottom flange 52. The bolts securing the channel members together are provided with a sleeve generally designated by the reference numeral 54 so as to properly space the channels from each other.

Solenoid 10 includes a body portion 56 having a conventional plunger 57 mounted therein with a push rod 58 secured thereto and movably extending from the upper end of the solenoid as illustrated in FIGS. 1 and 2. A conventional coil surrounds the plunger within the body portion 56 and is electrically connected to a switch 60 and a power source 62 in conventional fashion. The switch means 60 would be closed at a predetermined time upon a perforation in the piano roll registering with an opening formed in a tracker bar means. The numeral 64 designates a metallic end member mounted on the lower end of the body portion 56 while the numeral 66 refers to the metallic end member or neck on the upper end of the body portion 56 as best illustrated in FIG. 1. End member 66 is positioned between the flanges 22 and 42 as illustrated in FIG. 1 and has a threaded portion 68 adapted to receive a nut 70 thereon. Washer 72 embraces end member 66 above the flanges 22 and 42 and the tightening of the nut 70 on the threaded portion 68 draws the upper end of the body portion 56 upwardly into engagement with the undersides of flanges 22 and 42. A plurality of the solenoids 10 are mounted between the channel members 18 and 34 in a spaced apart relationship with a plurality of solenoids 10 are mounted between the channel members 20 and 36 in a spaced-apart relationship and in a staggered relationship with respect to the solenoids in the channel members 18 and 34. Thus, the solenoid units in FIGS. 1 and 2 are vertically spaced with respect to each other and also horizontally staggered so that the adjacent wipen actions 74 of the piano may be actuated by the push rods extending from the solenoid units. The solenoid units in channel members 20 and 36 are provided with a push rod which has a length greater than the pushrods positioned between the channel members 18 and 34. As seen in FIG. 2, the pushrods on the lower solenoids 10 extend upwardly between the channel members 18 and 34.

The solenoid units 10 and the channel means 14 may be installed in the piano "gang" fashion. Once the gang assembly has been mounted in the piano, the individual solenoids 10 may be slidably moved with respect to their respective channel members so that the plungers thereof will be properly aligned with the piano action. The engagement of the solenoid with the channel members at each side thereof provides a very efficient heat sink so as to permit the heat to dissipate from the solenoids. Besides serving as a heat sink, the channel means also serves as a frame to complete the magnetic path through the individual solenoid coils. The construction of the channel means permits the solenoids to be easily serviced or removed therefrom.

The solenoid units 12 of FIGS. 3 and 4 and the channel means 14' is identical to the embodiment of FIGS. 1 and 2 except that the plunger rod 58' extends downwardly from the plunger 75 of solenoid 12 so as to permit it to be attached to the bridle wire 76 of the piano action. The solenoid unit 12 is adaptable for use with bridle wires by simply providing a suitable connector 78 on the lower end of the plunger 58'. The connector 78 is operatively connected to the bridle wire 76 by a suitable wire 80.

As seen in the drawings, insulative strips **82** and **84** may be secured to the bases of channel members **34** and **36** which adapted to conveniently support the electrical wires of the assembly which are designated by the reference numeral **86**.

The metal-to-metal contact between the solenoids and the metallic channel members permits the channel members to act as a heat sink and as a frame to complete the magnetic path for the coil of the solenoid. The assembly of the invention also provides an adjustable holding fixture which aids in reducing the cost of manufacture. The assembly described herein insures that the solenoids may be easily serviced. The solenoid is easily adapted for use with various types of piano actions by simply lengthening or shortening the push rods thereof or by securing suitable connectors to the plunger rods. Thus it can be seen that the assembly accomplishes at least all of its stated objectives.

We claim:

1. An assembly for actuating piano-playing means, comprising,

a plurality of solenoid units, each of said solenoid units including a body portion having opposite ends and an actuator means movably extending from at least one end of said body portion,

each of said solenoid units having a threaded end member extending from one end of said body portion,

first and second spaced-apart metallic channel members, each of said channel members having at least a first flanges extending therefrom towards the flange of the other channel member,

bolt means maintaining said channel members in a spaced-apart relationship, said solenoid units being positioned between said first and second channel members,

said threaded end member being received between said first flanges of said first and second channel members,

a nut means threadably mounted on said threaded end member operatively engaging said first flanges to limit movement of said solenoid units with respect to said channel members.

2. The assembly of claim **1** wherein said actuator means includes a pushrod movably extending extending from one end of said body portion and includes a plunger means movably extending from the other end of said body portion, one of said pushrod and said plunger means being operatively connected to the piano action.

3. The assembly of claim **2** wherein said first channel member is secured to a support plate, a third channel member being secured to said support plate, a fourth channel spaced from third channel member, said third and fourth channel members being identical to said first and second channel members respectively, and having a plurality of solenoid units mounted therebetween.

4. An assembly for actuating piano-playing means, comprising,

a plurality of solenoid units, each of said solenoid units including a body portion having opposite ends and an actuator means movably extending from at least one end of said body portion,

each of said solenoid units having a threaded end member extending from one end of said body portion,

first and second spaced-apart metallic channel members, each of said channel members having at least a first flanges extending therefrom towards the flange of the other channel member,

bolt means maintaining said channel members in a spaced apart relationship,

said solenoid units being positioned between said first and second channel members,

said threaded end member being received between said first flanges of said first and second channel members,

a nut means threadably mounted on said threaded end member operatively engaging said first flanges to limit movement of said solenoid units with respect to said channel members.

said means maintaining said channel members in a spaced relationship comprising a bolt means extending through said channel members, said bolt means having a sleeve mounted thereon between said channel members which limits the movement of said channel members towards each other.

* * * * *